SERVICE MANUAL

N240JU / N241JU

notebook

Notebook Computer

N240JU / N241JU

Service Manual

Notice

The company reserves the right to revise this publication or to change its contents without notice. Information contained herein is for reference only and does not constitute a commitment on the part of the manufacturer or any subsequent vendor. They assume no responsibility or liability for any errors or inaccuracies that may appear in this publication nor are they in anyway responsible for any loss or damage resulting from the use (or misuse) of this publication.

This publication and any accompanying software may not, in whole or in part, be reproduced, translated, transmitted or reduced to any machine readable form without prior consent from the vendor, manufacturer or creators of this publication, except for copies kept by the user for backup purposes.

Brand and product names mentioned in this publication may or may not be copyrights and/or registered trademarks of their respective companies. They are mentioned for identification purposes only and are not intended as an endorsement of that product or its manufacturer.

Version 1.0
September 2015

Trademarks

Pentium and Celeron are trademarks of Intel Corporation.
Windows® is a registered trademark of Microsoft Corporation.
Other brand and product names are trademarks and /or registered trademarks of their respective companies.

About this Manual

This manual is intended for service personnel who have completed sufficient training to undertake the maintenance and inspection of personal computers.

It is organized to allow you to look up basic information for servicing and/or upgrading components of the ***N240JU / N241JU*** series notebook PC.

The following information is included:

Chapter 1, Introduction, provides general information about the location of system elements and their specifications.
Chapter 2, Disassembly, provides step-by-step instructions for disassembling parts and subsystems and how to upgrade elements of the system.

Appendix A, Part Lists
Appendix B, Schematic Diagrams
Appendix C, Updating the FLASH ROM BIOS

IMPORTANT SAFETY INSTRUCTIONS

Follow basic safety precautions, including those listed below, to reduce the risk of fire, electric shock and injury to persons when using any electrical equipment:

1. Do not use this product near water, for example near a bath tub, wash bowl, kitchen sink or laundry tub, in a wet basement or near a swimming pool.
2. Avoid using a telephone (other than a cordless type) during an electrical storm. There may be a remote risk of electrical shock from lightning.
3. Do not use the telephone to report a gas leak in the vicinity of the leak.
4. Use only the power cord and batteries indicated in this manual. Do not dispose of batteries in a fire. They may explode. Check with local codes for possible special disposal instructions.
5. This product is intended to be supplied by a Listed Power Unit with an AC Input of 100 - 240V, 50 - 60Hz, DC Output of 19V, 2.1A (**40** Watts) minimum AC/DC Adapter.

FCC Statement

This device complies with Part 15 of the FCC Rules. Operation is subject to the following two conditions:
This device may not cause harmful interference.
This device must accept any interference received, including interference that may cause undesired operation.

Instructions for Care and Operation

The notebook computer is quite rugged, but it can be damaged. To prevent this, follow these suggestions:

1. **Don't drop it, or expose it to shock.** If the computer falls, the case and the components could be damaged.

Do not expose the computer to any shock or vibration. 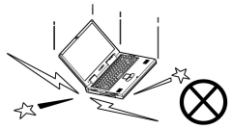	*Do not place it on an unstable surface.* 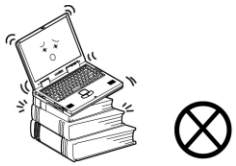	*Do not place anything heavy on the computer.* 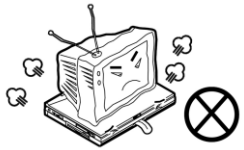

2. **Keep it dry, and don't overheat it.** Keep the computer and power supply away from any kind of heating element. This is an electrical appliance. If water or any other liquid gets into it, the computer could be badly damaged.

Do not expose it to excessive heat or direct sunlight.	*Do not leave it in a place where foreign matter or moisture may affect the system.*	*Don't use or store the computer in a humid environment.* 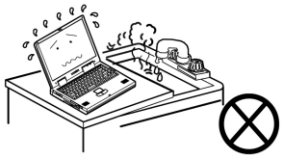	*Do not place the computer on any surface which will block the vents.* 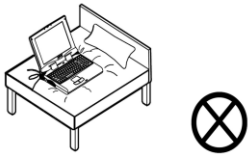

3. **Follow the proper working procedures for the computer**. Shut the computer down properly and don't forget to save your work. Remember to periodically save your data as data may be lost if the battery is depleted.

Do not turn off the power until you properly shut down all programs. 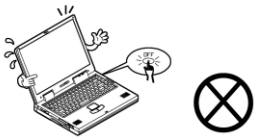	*Do not turn off any peripheral devices when the computer is on.* 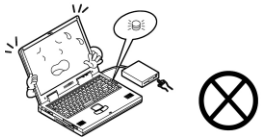	*Do not disassemble the computer by yourself.*	*Perform routine maintenance on your computer.*

4. **Avoid interference.** Keep the computer away from high capacity transformers, electric motors, and other strong magnetic fields. These can hinder proper performance and damage your data.
5. **Take care when using peripheral devices**.

Use only approved brands of peripherals. 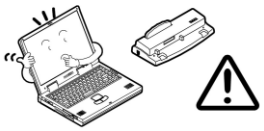	*Unplug the power cord before attaching peripheral devices.* 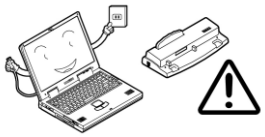

Power Safety

The computer has specific power requirements:

- Only use a power adapter approved for use with this computer.
- Your AC adapter may be designed for international travel but it still requires a steady, uninterrupted power supply. If you are unsure of your local power specifications, consult your service representative or local power company.
- The power adapter may have either a 2-prong or a 3-prong grounded plug. The third prong is an important safety feature; do not defeat its purpose. If you do not have access to a compatible outlet, have a qualified electrician install one.
- When you want to unplug the power cord, be sure to disconnect it by the plug head, not by its wire.
- Make sure the socket and any extension cord(s) you use can support the total current load of all the connected devices.
- Before cleaning the computer, make sure it is disconnected from any external power supplies.

Power Safety Warning

Before you undertake any upgrade procedures, make sure that you have turned off the power, and disconnected all peripherals and cables (including telephone lines and power cord). It is advisable to also remove your battery in order to prevent accidentally turning the machine on.

Do not plug in the power cord if you are wet.	*Do not use the power cord if it is broken.* 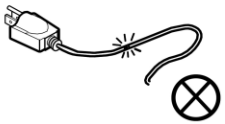	*Do not place heavy objects on the power cord.* 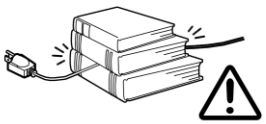

Battery Precautions

- Only use batteries designed for this computer. The wrong battery type may explode, leak or damage the computer.
- Do not continue to use a battery that has been dropped, or that appears damaged (e.g. bent or twisted) in any way. Even if the computer continues to work with a damaged battery in place, it may cause circuit damage, which may possibly result in fire.
- Recharge the batteries using the notebook's system. Incorrect recharging may make the battery explode.
- Do not try to repair a battery pack. Refer any battery pack repair or replacement to your service representative or qualified service personnel.
- Keep children away from, and promptly dispose of a damaged battery. Always dispose of batteries carefully. Batteries may explode or leak if exposed to fire, or improperly handled or discarded.
- Keep the battery away from metal appliances.
- Affix tape to the battery contacts before disposing of the battery.
- Do not touch the battery contacts with your hands or metal objects.

Battery Guidelines

The following can also apply to any backup batteries you may have.

- If you do not use the battery for an extended period, then remove the battery from the computer for storage.
- Before removing the battery for storage charge it to 60% - 70%.
- Check stored batteries at least every 3 months and charge them to 60% - 70%.

Battery Disposal

The product that you have purchased contains a rechargeable battery. The battery is recyclable. At the end of its useful life, under various state and local laws, it may be illegal to dispose of this battery into the municipal waste stream. Check with your local solid waste officials for details in your area for recycling options or proper disposal.

Caution

Danger of explosion if battery is incorrectly replaced. Replace only with the same or equivalent type recommended by the manufacturer. Discard used battery according to the manufacturer's instructions.

Battery Level

Click the battery icon in the taskbar to see the current battery level and charge status. A battery that drops below a level of 10% will not allow the computer to boot up. Make sure that any battery that drops below 10% is recharged within one week.

Related Documents

You may also need to consult the following manual for additional information:

User's Manual on CD/DVD

This describes the notebook PC's features and the procedures for operating the computer and its ROM-based setup program. It also describes the installation and operation of the utility programs provided with the notebook PC.

System Startup

1. Remove all packing materials.
2. Place the computer on a stable surface.
3. Insert the battery and make sure it is locked in position.
4. Securely attach any peripherals you want to use with the computer (e.g. keyboard and mouse) to their ports.
5. Attach the AC/DC adapter to the DC-In jack at the rear of the computer, then plug the AC power cord into an outlet, and connect the AC power cord to the AC/DC adapter.
6. Use one hand to raise the lid/LCD to a comfortable viewing angle (do not exceed 127 degrees); use the other hand (as illustrated in Figure 1) to support the base of the computer (**Note**: **Never** lift the computer by the lid/LCD).
7. Press the power button to turn the computer "on".

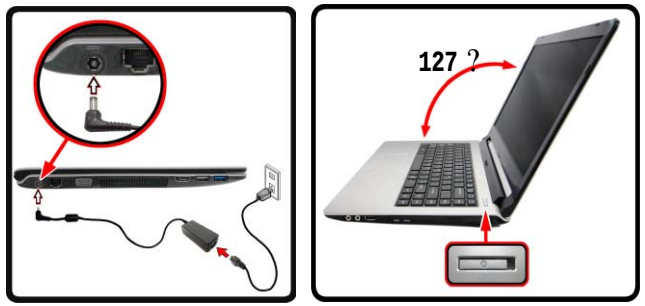

Figure 1
Opening the Lid/LCD/ Computer with AC/DC Adapter Plugged-In

Shut Down

Note that you should always shut your computer down by choosing the **Shut down** command in **Windows** (see below). This will help prevent hard disk or system problems.

Click **Settings** in the **Charms Bar** (use the **Windows Logo Key** + **C** key combination to access the Charms Bar) and choose **Shut down** from the **Power** menu.

Or

Choose **Shut down or sign out > Shut down** from the context menu (use the **Windows Logo Key** + **X** key combination to access the context menu).

Contents

Introduction 1-1

Overview 1-1
Specifications 1-2
External Locator - Top View with LCD Panel Open 1-4
External Locator - Front & Right Side Views 1-5
External Locator - Left Side & Rear View 1-6
External Locator - Bottom View 1-7
Mainboard Overview - Top (Key Parts) 1-8
Mainboard Overview - Bottom (Key Parts) 1-9
Mainboard Overview - Top (Connectors) 1-10
Mainboard Overview - Bottom (Connectors) 1-11

Disassembly 2-1

Overview 2-1
Maintenance Tools 2-2
Connections 2-2
Maintenance Precautions 2-3
Disassembly Steps 2-4
Removing the Battery 2-5
Removing the Hard Disk Drive 2-6
Removing the System Memory (RAM) 2-8
Removing the Keyboard 2-10
Removing the Wireless LAN Module 2-11
Wireless LAN, and Combo Module Cables 2-12
Removing the 3G Module 2-13
Removing and Installing the M.2 SSD Module 2-14
Removing the CCD 2-16

Part Lists A-1

Part List Illustration Location A-2
Top A-3
Top (TV Tuner) A-4
Bottom A-5
LCD A-6
HDD A-7

Schematic Diagrams.....B-1

System Block Diagram B-2
Processor 1/11 .....B-3
Processor 2/11 .....B-4
Processor 3/11 .....B-5
Processor 4/11 .....B-6
Processor 5/11 .....B-7
Processor 6/11 .....B-8
Processor 7/11 .....B-9
Processor 8/11 .....B-10
Processor 9/11 .....B-11
Processor 10/11 .....B-12
Processor 11/11 .....B-13
DDR3 SO-DIMM_0 .....B-14
DDR3 SO-DIMM_1 .....B-15
HDMI B-16
Panel B-17
Conn, CCD, Fan, T/P, TV B-18
PS8625 .....B-19
SATA, LED, KB, G-Sensor B-20
USB, TPM B-21
WLAN/BT, 3G/mSATA B-22
NGFF_M SSD B-23
Audio Codec B-24
KBC ITE IT8587 .....B-25
3V, 5V, 3VS, 5VS, CTL Signal B-26

VDD3, VDD5 ..... B-27
VDDQ_VTT, 1.5VS, 1.8VS B-28
1.0V Series B-29
VCore, VCCGT, VCCSA, VCCIO B-30
NCP81206 Regulator B-31
Charger, DC-In B-32
USB Board B-33
CRT B-34
RTL8411B B-35
Power SW Board B-36
Click Board B-37
LED Board B-38
HDD Board B-39

Updating the FLASH ROM BIOS..... C-1

Download the BIOS C-1
Unzip the downloaded files to a bootable CD/DVD/ or
USB Flash drive C-1
Set the computer to boot from the external drive C-1
Use the flash tools to update the BIOS C-2
Restart the computer (booting from the HDD) C-2

Chapter 1: Introduction

Overview

This manual covers the information you need to service or upgrade the ***N240JU / N241JU*** series notebook computer. Information about operating the computer (e.g. getting started, and the *Setup* utility) is in the *User's Manual*. Information about dri-vers (e.g. VGA & audio) is also found in the *User's Manual*. The manual is shipped with the computer.

Operating systems (e.g. *Window 8.1*, etc.) have their own manuals as do application softwares (e.g. word processing and database programs). If you have questions about those programs, you should consult those manuals.

The ***N240JU / N241JU*** series notebook is designed to be upgradeable. See ***Disassembly on page 2 - 1*** for a detailed description of the upgrade procedures for each specific component. Please take note of the warning and safety information indicated by the "" symbol.

The balance of this chapter reviews the computer's technical specifications and features.

Specifications

Latest Specification Information

The specifications listed here are correct at the time of sending them to the press. Certain items (particularly processor types/speeds) may be changed, delayed or updated due to the manufacturer's release schedule. Check with your service center for more details.

CPU

The CPU is not a user serviceable part. Accessing the CPU in any way may violate your warranty.

Processor Options

Intel® Core™ i7 Processor
i7-6500U (2.50GHz)
4MB Smart Cache, **14nm**, DDR3L-1600MHz, TDP 15W
Intel® Core™ i5 Processor
i5-6200U (2.30GHz)
3MB Smart Cache, **14nm**, DDR3L-1600MHz, TDP 15W
Intel® Core™ i3 Processor
i3-6100U (2.30GHz)
3MB Smart Cache, **14nm**, DDR3L-1600MHz, TDP 15W
Intel® Pentium® Processor
4405U (2.10GHz)
2MB Smart Cache, **14nm**, DDR3L-1600MHz, TDP 15W
Intel® Celeron® Processor
3955U (2.00GHz), 3855U (1.60GHz)
2MB Smart Cache, **14nm**, DDR3L-1600MHz, TDP 15W

BIOS

64Mb SPI Flash ROM
AMI BIOS

Memory

Two 204 Pin SO-DIMM Sockets Supporting **DDR3L 1600MHz** Memory
Memory Expandable up to 16GB

(The real memory operating frequency depends on the FSB of the processor.)

LCD Options

14" (35.56cm), 16:9, HD (1366x768) (Thickness: 3.6mm)/ FHD (1920x1080) (Thickness: 3.0mm)

Video Adapter

Intel GPU (CPU integrated)

Intel HD Graphics 520 (Core i7/i5/i3 CPU)
Dynamic Frequency
Intel Dynamic Video Memory Technology
Microsoft DirectX®12 Compatible
Intel HD Graphics 510 (Pentium/Celeron CPU)
Dynamic Frequency
Intel Dynamic Video Memory Technology
Microsoft DirectX®12 Compatible

Storage

One Changeable 2.5" 7mm (h) SATA HDD/SSD

(**Factory Option for Core i7-6500U/i5-6200U/i3-6100U/Celeron 3955U**) One M.2 **SATA/PCIe Gen3 x4** Solid State Drive (SSD)

(**Factory Option for Pentium 4405U/Celeron 3855U**) One M.2 **PCIe Gen2 x2** Solid State Drive (SSD)

Audio

High Definition Audio Compliant Interface
2 * Built-In Speakers
Built-In Microphone
(**Factory Option**) Built-In Array Microphone

Security

Security (Kensington® Type) Lock Slot
BIOS Password
Intel PTT

Pointing Device

Built-in Touchpad

Keyboard

“WinKey” keyboard (with embedded numeric keypad)

Card Reader

Embedded Multi-In-1 Card Reader
MMC (MultiMedia Card) / RS MMC
SD (Secure Digital) / Mini SD / SDHC/ SDXC

M.2 Slots (Core i7-6500U/i5-6200U/i3-6100U/Celeron 3955U)

Slot 1 for **WLAN and Bluetooth** Combo Module
Slot 2 for **SATA/PCIe Gen3 x4 SSD**
(**Factory Option**) Slot 3 for **3G/4G** Module

M.2 Slots (Pentium 4405U/Celeron 3855U)

Slot 1 for **WLAN and Bluetooth** Combo Module
Slot 2 for **PCIe Gen2 x2 SSD**
(**Factory Option**) Slot 3 for **3G/4G** Module

Interface

One HDMI-Out Port
One External Monitor Port
One Headphone-Out Jack
One Microphone-In Jack
One RJ-45 LAN Jack
One DC-in Jack
Two USB 3.0 Ports
One USB 2.0 Port

Communication

Built-In Gigabit Ethernet LAN
1.0M HD PC Camera Module
(**Factory Option**) **3G** or **4G** M.2 Module

WLAN/ Bluetooth M.2 Modules:

(**Factory Option**) Intel® Wireless-AC 8260 Wireless LAN (**802.11ac**) + Bluetooth 4.1

(**Factory Option**) Intel® Wireless-AC 7265 Wireless LAN (**802.11ac**) + Bluetooth 4.1

(**Factory Option**) Intel® Wireless-AC 3165 Wireless LAN (**802.11ac**) + Bluetooth 4.0

(**Factory Option**) Intel® Wireless-N 7265 Wireless LAN (**802.11b/g/n**) + Bluetooth 4.0

(**Factory Option**) Third-Party Wireless LAN (**802.11b/g/n**) + Bluetooth 4.0

Environmental Spec

Temperature
Operating: 5°C - 35°C
Non-Operating: -20°C - 60°C
Relative Humidity
Operating: 20% - 80%
Non-Operating: 10% - 90%

Power

Full Range AC/DC Adapter
AC Input: 100 - 240V, 50 - 60Hz
DC Output: 19V, 2.1A (**40W**)

Removable 4 Cell Smart Lithium-Ion Battery Pack, 32WH
(**Factory Option**) Removable 4 Cell Smart Lithium-Ion Battery Pack, 44WH
(**Factory Option**) Removable 3 Cell Smart Lithium-Ion Battery Pack, 24WH

Dimensions & Weight

340mm (w) * 243.5mm (d) * 22.2mm (h)
(Height Excluding Battery Area)
1.8kg (Barebone with 32WH Battery)

External Locator - Top View with LCD Panel Open

Figure 1
Top View

1. PC Camera
2. *PC Camera LED
   **When the PC camera is in use, the LED will be illuminated in red.*
3. Built-In Microphone
4. LCD
5. Power Button
6. Keyboard
7. Touchpad & Buttons

External Locator - Front & Right Side Views

FRONT VIEW

Figure 2
Front View

1. LED Indicator
2.

RIGHT SIDE VIEW

Figure 3
Right Side View

1. USB 2.0 Port
2. Multi-in-1 Card Reader
3. External Monitor Port
4. RJ-45 LAN Jack

External Locator - Left Side & Rear View

Figure 4
Left Side View

1. Security Lock Slot
2. DC-In Jack
3. HDMI-Out Port
4. Vent
5. USB 3.0 Ports
6. Microphone-In Jack
7. Headphone-Out Jack

LEFT SIDE VIEW

Figure 5
Rear View

1. Battery

REAR VIEW

External Locator - Bottom View

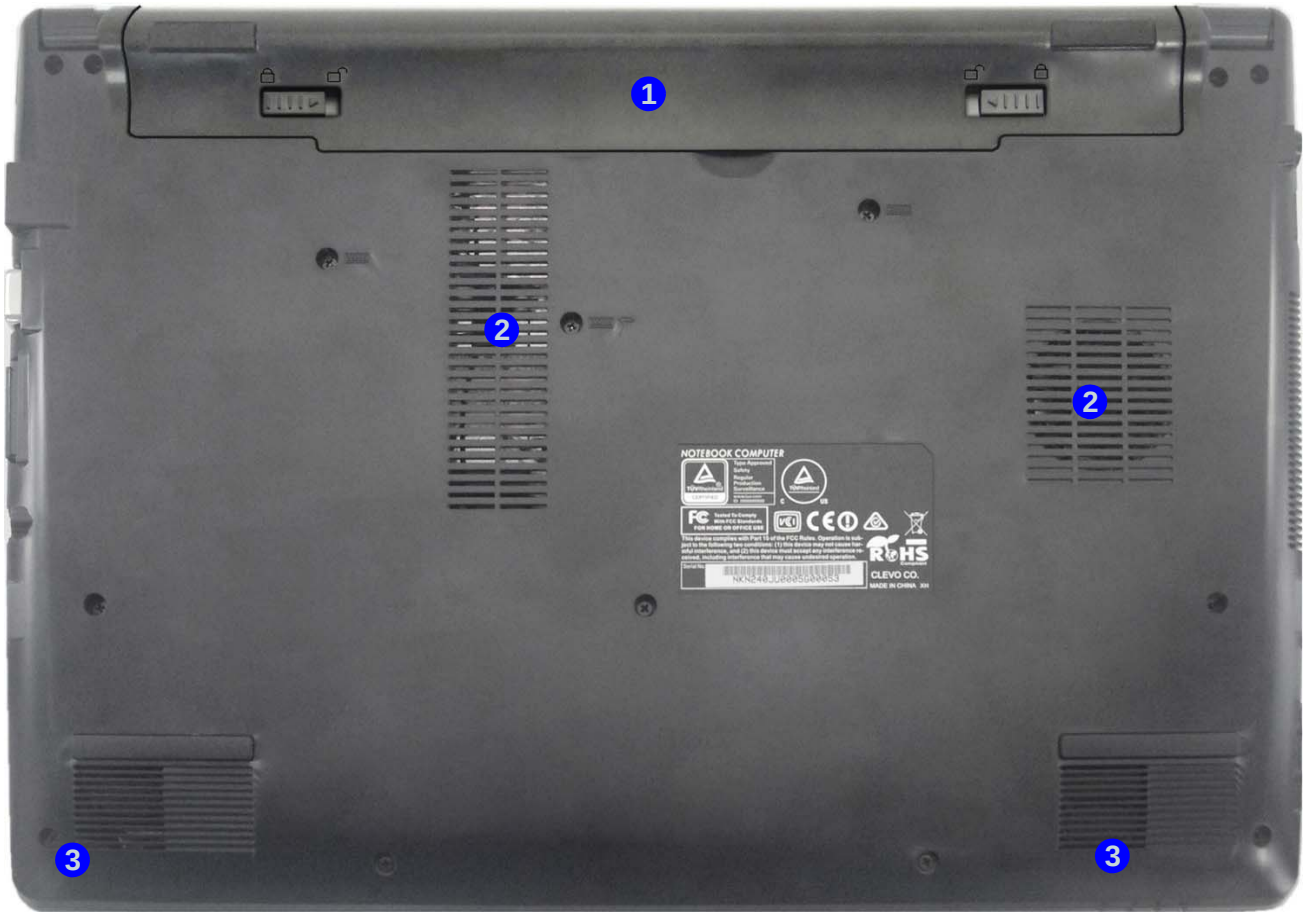

Figure 6
Bottom View

1. Battery
2. Vent
3. Speakers

Overheating

To prevent your computer from overheating, make sure nothing blocks any vent while the computer is in use.

Figure 7
Mainboard Top Key Parts

Mainboard Overview - Top (Key Parts)

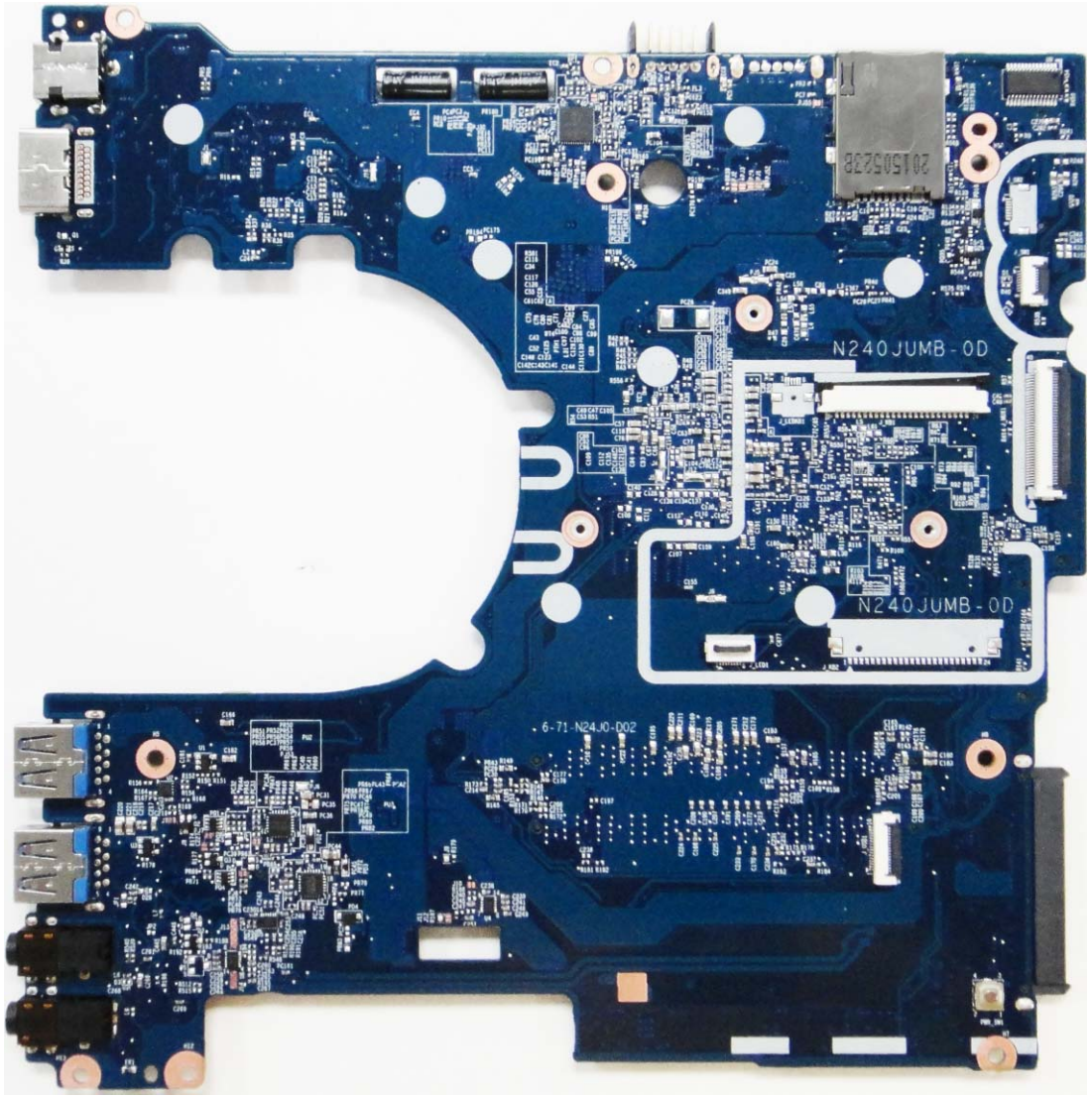

Mainboard Overview - Bottom (Key Parts)

Figure 8
Mainboard Bottom Key Parts

1. KBC-ITE IT8587
2. CPU
3. Memory Slots DDR3L SO-DIMM
4. CMOS Battery

Mainboard Overview - Top (Connectors)

Figure 9
Mainboard Top Connectors

1. DC-In Jack
2. HDMI-Out Port
3. USB Ports 3.0
4. Microphone-In Jack
5. Headphone-Out Jack
6. SIM Card Reader
7. Keyboard Cable Connector

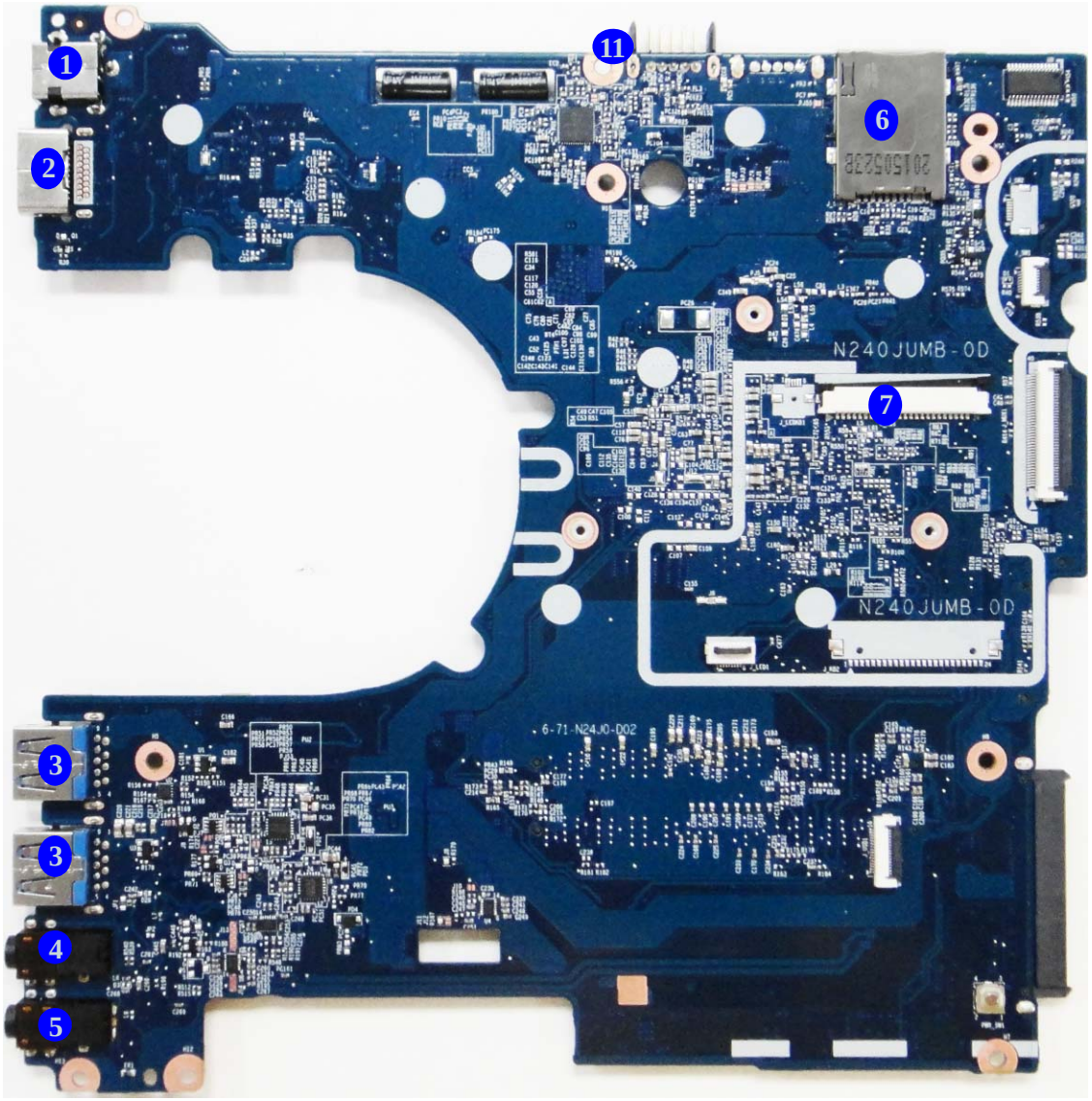

Mainboard Overview - Bottom (Connectors)

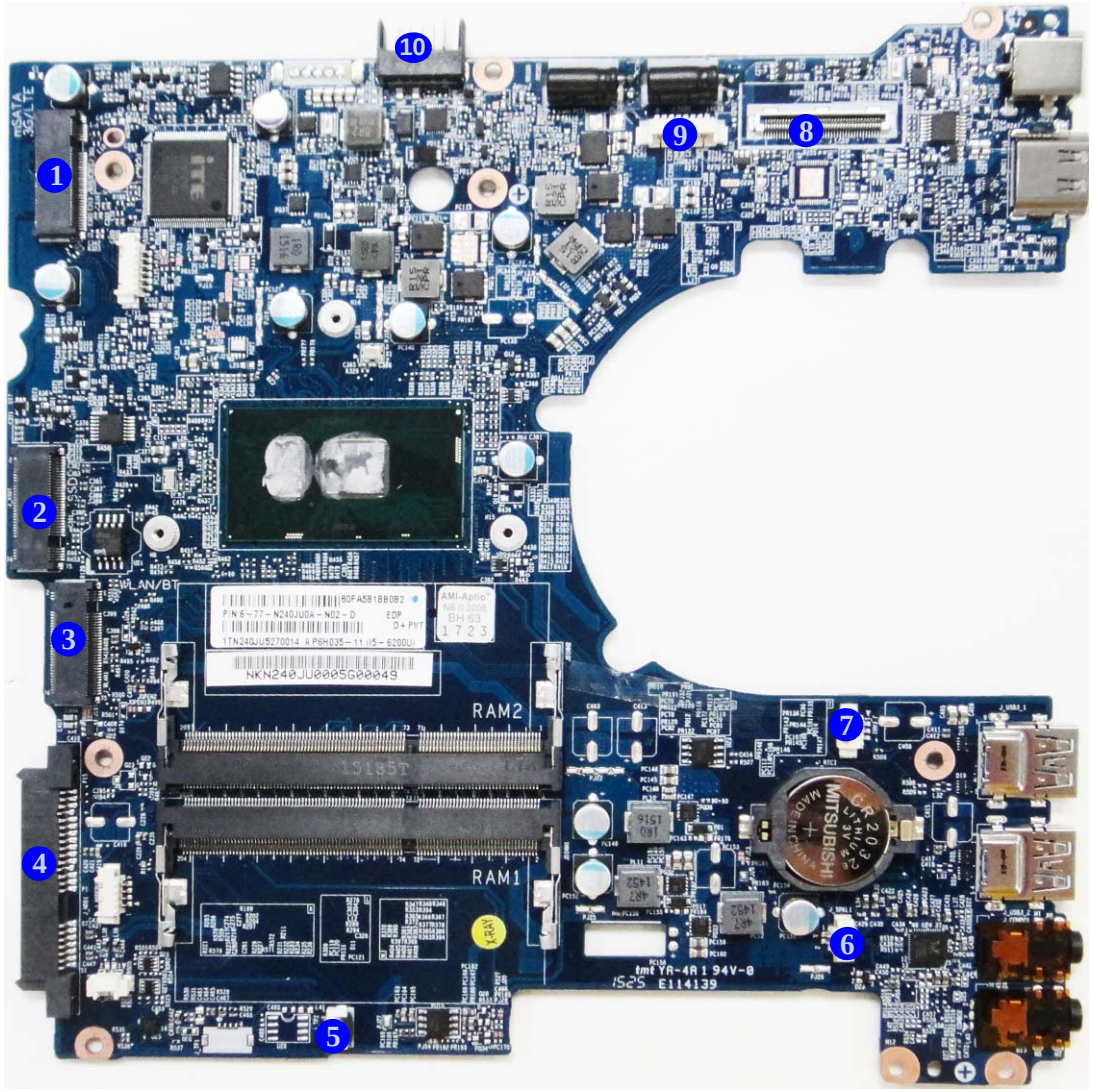

Figure 10
Mainboard Bottom Connectors

1. 3G/4G Card Connector
2. M.2 Card Connectort
3. WLAN Connector
4. HDD Connector
5. Touchpad Connector
6. Speaker Connector
7. Fan Connector
8. LCD Cable Connector
9. CCD Connector
10. Battery Connector

Chapter 2: Disassembly

Overview

This chapter provides step-by-step instructions for disassembling the ***N240JU / N241JU*** series notebook's parts and sub-systems. When it comes to reassembly, reverse the procedures (unless otherwise indicated).

We suggest you completely review any procedure before you take the computer apart.

Procedures such as upgrading/replacing the RAM, optical device and hard disk are included in the User's Manual but are repeated here for your convenience.

To make the disassembly process easier each section may have a box in the page margin. Information contained under the figure # will give a synopsis of the sequence of procedures involved in the disassembly procedure. A box with a lists the relevant parts you will have after the disassembly process is complete. **Note**: The parts listed will be for the disassembly procedure listed ONLY, and not any previous disassembly step(s) required. Refer to the part list for the previous disassembly procedure. The amount of screws you should be left with will be listed here also.

A box with a will also provide any possible helpful information. A box with a contains warnings.

An example of these types of boxes are shown in the sidebar.

Information

Warning

NOTE: All disassembly procedures assume that the system is turned **OFF**, and disconnected from any power supply (the battery is removed too).

Maintenance Tools

The following tools are recommended when working on the notebook PC:

- M3 Philips-head screwdriver
- M2.5 Philips-head screwdriver (magnetized)
- M2 Philips-head screwdriver
- Small flat-head screwdriver
- Pair of needle-nose pliers
- Anti-static wrist-strap

Connections

Connections within the computer are one of four types:

Locking collar sockets for ribbon connectors	To release these connectors, use a small flat-head screwdriver to gently pry the locking collar away from its base. When replacing the connection, make sure the connector is oriented in the same way. The pin1 side is usually not indicated.
Pressure sockets for multi-wire connectors	To release this connector type, grasp it at its head and gently rock it from side to side as you pull it out. Do not pull on the wires themselves. When replacing the connection, do not try to force it. The socket only fits one way.
Pressure sockets for ribbon connectors	To release these connectors, use a small pair of needle-nose pliers to gently lift the connector away from its socket. When replacing the connection, make sure the connector is oriented in the same way. The pin1 side is usually not indicated.
Board-to-board or multi-pin sockets	To separate the boards, gently rock them from side to side as you pull them apart. If the connection is very tight, use a small flat-head screwdriver - use just enough force to start.

Maintenance Precautions

The following precautions are a reminder. To avoid personal injury or damage to the computer while performing a removal and/or replacement job, take the following precautions:

1. **Don't drop it**. Perform your repairs and/or upgrades on a stable surface. If the computer falls, the case and other components could be damaged.
2. **Don't overheat it**. Note the proximity of any heating elements. Keep the computer out of direct sunlight.
3. **Avoid interference**. Note the proximity of any high capacity transformers, electric motors, and other strong magnetic fields. These can hinder proper performance and damage components and/or data. You should also monitor the position of magnetized tools (i.e. screwdrivers).
4. **Keep it dry**. This is an electrical appliance. If water or any other liquid gets into it, the computer could be badly damaged.
5. **Be careful with power**. Avoid accidental shocks, discharges or explosions.
   - Before removing or servicing any part from the computer, turn the computer off and detach any power supplies.
   - When you want to unplug the power cord or any cable/wire, be sure to disconnect it by the plug head. Do not pull on the wire.
6. **Peripherals** – Turn off and detach any peripherals.
7. **Beware of static discharge**. ICs, such as the CPU and main support chips, are vulnerable to static electricity. Before handling any part in the computer, discharge any static electricity inside the computer. When handling a printed circuit board, do not use gloves or other materials which allow static electricity buildup. We suggest that you use an anti-static wrist strap instead.
8. **Beware of corrosion**. As you perform your job, avoid touching any connector leads. Even the cleanest hands produce oils which can attract corrosive elements.
9. **Keep your work environment clean**. Tobacco smoke, dust or other air-born particulate matter is often attracted to charged surfaces, reducing performance.
10. **Keep track of the components**. When removing or replacing any part, be careful not to leave small parts, such as screws, loose inside the computer.

Power Safety Warning

Before you undertake any upgrade procedures, make sure that you have turned off the power, and disconnected all peripherals and cables (including telephone lines and power cord). It is advisable to also remove your battery in order to prevent accidentally turning the machine on.

Cleaning

Do not apply cleaner directly to the computer, use a soft clean cloth.
Do not use volatile (petroleum distillates) or abrasive cleaners on any part of the computer.

Disassembly Steps

The following table lists the disassembly steps, and on which page to find the related information. **PLEASE PERFORM THE DISASSEMBLY STEPS IN THE ORDER INDICATED.**

To remove the Battery:

1. Remove the battery *page 2 - 5*

To remove the HDD:

1. Remove the battery *page 2 - 5*
2. Remove the HDD *page 2 - 6*

To remove the System Memory:

1. Remove the battery *page 2 - 5*
2. Remove the system memory *page 2 - 8*

To remove the Keyboard:

1. Remove the battery *page 2 - 5*
2. Remove the keyboard *page 2 - 10*

To remove the Wireless LAN Module:

1. Remove the battery *page 2 - 5*
2. Remove the WLAN *page 2 - 11*

To remove the 3G Module:

1. Remove the battery *page 2 - 5*
2. Remove the 3G *page 2 - 13*

To remove and install the M.2 SSD Module:

1. Remove the battery *page 2 - 5*
2. Remove the SSD module *page 2 - 14*
3. Install the SSD module *page 2 - 15*

To remove the CCD Module:

1. Remove the battery *page 2 - 5*
2. Remove the CCD module *page 2 - 16*

Removing the Battery

1. Turn **off** the computer, turn it over.
2. Slide the latch 1 in the direction of the arrow (***Figure 1a***).
3. Slide the latch 2 in the direction of the arrow, and hold it in place (***Figure 1b***).
4. While holding the latch 2 in place, pull the battery 3 up in the direction of the arrow 4 and lift it out (***Figure 1c***).
5. Orientate the new battery 3 as illustrated and align the pins 5 & 6 with the edges of the battery compartment (***Figure 1d***).
6. Turn the battery 3 in the direction of the arrow 7 to insert it into the compartment (***Figure 1e***).
7. Slide the latch 8 in the direction of the arrow into the lock position (***Figure 1f***).

Figure 1
Battery Removal

a. Slide the latch and hold it in place.
b. Turn the battery in the direction of the arrow.
c. Lift the battery out.
d. Insert a new battery by aligning the pins.
e. Turn the battery in the direction of the arrow.
f. Lock the latch in place.

a.

b.

c.

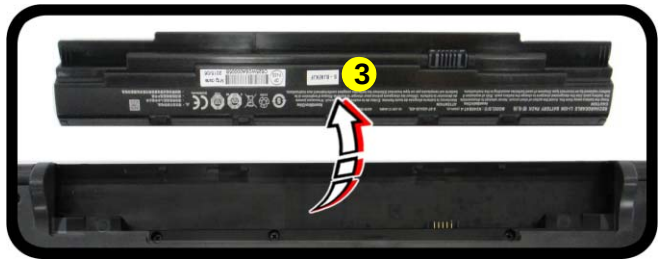

d.

e.

f.

3. Battery

Figure 2
HDD Assembly Removal

a. Remove the screws.
b. Remove the bottom cover.
c. Locate the HDD assembly.

Removing the Hard Disk Drive

The hard disk drive can be taken out to accommodate other 2.5" serial (SATA) hard disk drives with a height of 7.0mm (h). Follow your operating system's installation instructions, and install all necessary drivers and utilities (as outlined in **Chapter 4 of the User's Manual**) when setting up a new hard disk.

Hard Disk Upgrade Process

1. Turn **off** the computer, turn it over to remove the battery (***page 2 - 5***).
2. Remove the SD card cover 1 and screws 2 - 18 (***Figure 2a***).
3. Lift the bottom cover 19 up from point 20 (***Figure 2b***).
4. The hard disk drive will be visible at point 21 (***Figure 2c***).

HDD System Warning

New HDD's are blank. Before you begin make sure:

You have backed up any data you want to keep from your old HDD.

You have all the CD-ROMs and FDDs required to install your operating system and programs.

If you have access to the internet, download the latest application and hardware driver updates for the operating system you plan to install. Copy these to a removable medium.

a.

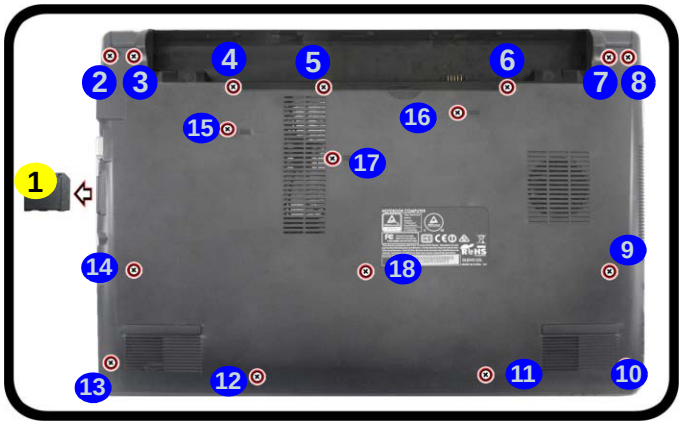

b.

c.

1. SD Card Cover
19. Bottom Cover

- 17 Screws

5. Slightly lift and pull the hard disk assembly in the direction of arrow 22 (*Figure 3d*).
6. Lift the hard disk assembly 23 out of the bay 24 (*Figure 3e*).
7. Remove the screws 25 - 26 and the adhesive cover 27 from the hard disk 28 (*Figure 3f*).
8. Reverse the process to install a new hard disk (do not forget to replace all the screws and bottom cover).

Figure 3
HDD Assembly Removal (cont'd.)

d. Slightly lift and pull the HDD assembly in the direction of the arrow.
e. Lift the HDD assembly out of the bay.
f. Remove the screws and HDD bracket.

d.

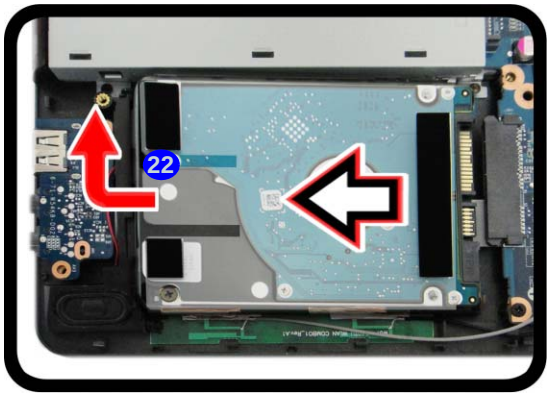

e.

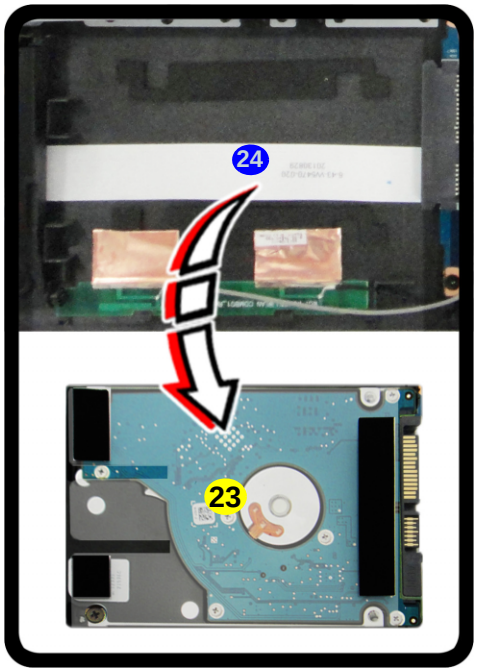

f.

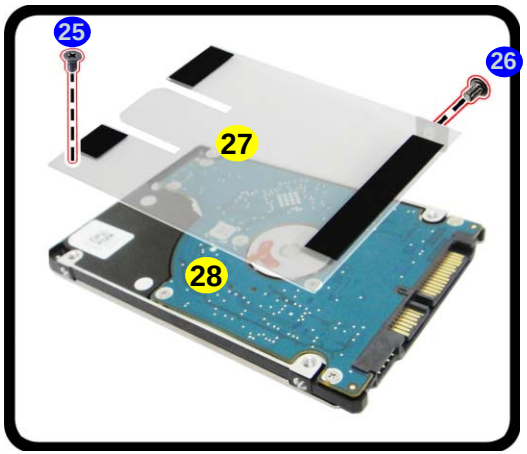

23. HDD Assembly
27. HDD Bracket
28. HDD

- 2 Screws

Figure 4
RAM Module Removal

a. The RAM modules will be visible at point 1 on the mainboard.
b. Pull the release latches.
c. Remove the module.

Removing the System Memory (RAM)

The computer has two memory sockets for 204 pin Small Outline Dual In-line Memory Modules (SO-DIMM) supporting single or dual channel DDR3L depending on the CPU. The main memory can be expanded up to 8GB. The SO-DIMM modules supported are 1024MB and 2048MB **DDR3L** Modules. The total memory size is automatically detected by the POST routine once you turn on your computer.

Memory Upgrade Process

1. Turn **off** the computer, turn it over to remove the battery (***page 2 - 5***).
2. The RAM modules will be visible at point 1 on the mainboard (***Figure 4b***).
3. Gently pull the two release latches (2 & 3) on the sides of the memory socket in the direction indicated by the arrows (***Figure 4b***).
4. The RAM module 4 will pop-up (***Figure 4c***), and you can then remove it.

Contact Warning

Be careful not to touch the metal pins on the module's connecting edge. Even the cleanest hands have oils which can attract particles, and degrade the module's performance.

a.

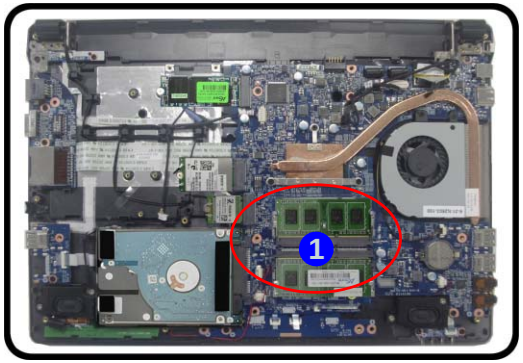

b.

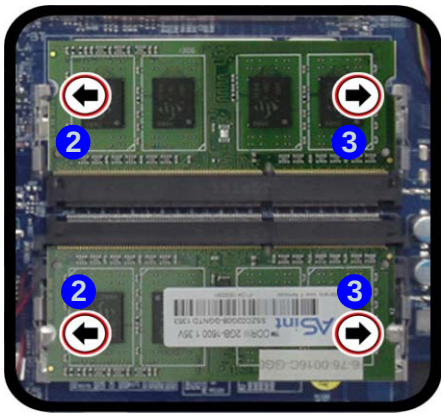

c.

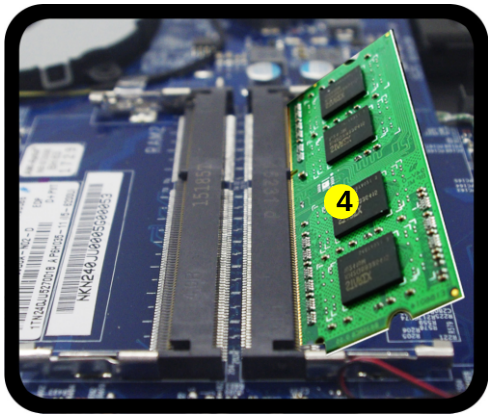

4. RAM Module

Single Memory Module Installation

If your computer has a single memory module, then insert the module into the **Channel 0 (JDIMM1 / RAM1)** socket.

5. Pull the latches to release the second module if necessary.
6. Insert a new module holding it at about a 30° angle and fit the connectors firmly into the memory slot.
7. The module will only fit one way as defined by its pin alignment. Make sure the module is seated as far into the slot as it will go. DO NOT FORCE IT; it should fit without much pressure.
8. Press the module in and down towards the mainboard until the slot levers click into place to secure the module.
9. Replace the bottom case and the screws (see ***page 2 - 5***).
10. Restart the computer to allow the BIOS to register the new memory configuration as it starts up.

Removing the Keyboard

Figure 5
Keyboard Removal

a.
b. Release the keyboard by pressing at point 4.
c. Disconnect the keyboard ribbon cable from the locking collar socket.
d. Remove the keyboard.

1. Turn **off** the computer, turn it over to remove the battery (***page 2 - 5***).
2. Remove screws 1 - 3 from the bottom case (***Figure 5a***).
3. Open it up with the LCD on a flat surface before pressing at point 4 to release the keyboard module while releasing the keyboard in the direction of the arrow 5 as shown (***Figure 5b***).
4. Carefully lift the keyboard 6 up, being careful not to bend the keyboard ribbon cable 7. Disconnect the keyboard ribbon cable from the locking collar socket 8 (***Figure 5c***).
5. Carefully lift up the keyboard 6 off the computer (***Figure 5d***).
6. Reverse the process to install the keyboard (be careful not to bend the keyboard ribbon cable).

a.

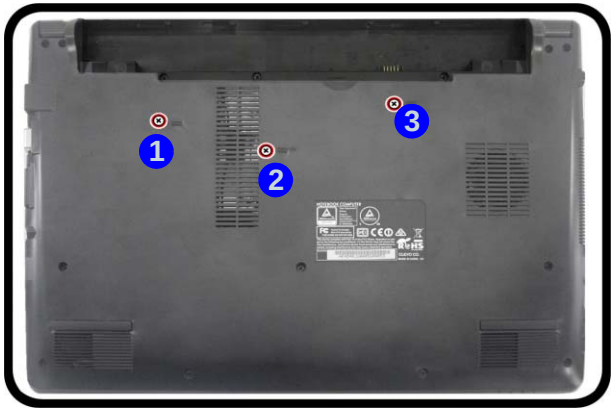

b.

c.

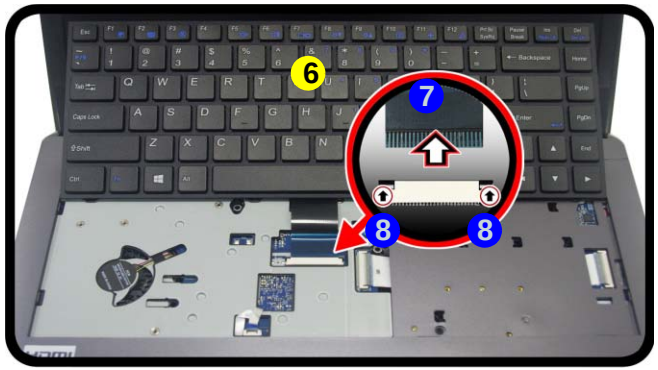

c.

2. Keyboard

Removing the Wireless LAN Module

1. Turn **off** the computer, turn it over to remove the battery (***page 2 - 5***).
2. The Wireless LAN module will be visible at point 1 on the mainboard (***Figure 6a***).
3. Carefully disconnect the cables 2 & 3, and then remove the screw 4 (***Figure 6b***)
4. The Wireless LAN module 5 (***Figure 6c***) will pop-up, and you can remove it from the computer.

a.

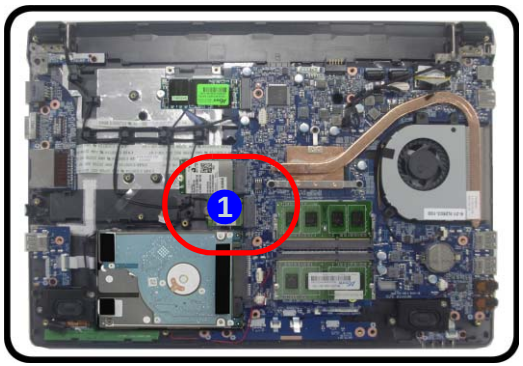

b.

c.

Figure 6
Wireless LAN Module Removal

a. Locate the WLAN.
b. Disconnect the cable and remove the screw.
c. The WLAN module will pop up and lift it out of the computer.

Note: Make sure you reconnect the antenna cable to the "1 + 2" socket (***Figure 6b***).

5.Wireless LAN Module

- 1 Screw

Wireless LAN, and Combo Module Cables

Note that the cables for connecting to the antennae on WLAN, and WLAN & Bluetooth Combo modules are not labelled. The cables/covers (each cable will have either a black or transparent cable cover) are color coded for identification as outlined in the table below.

Module Type	Antenna Type	Cable Color	Cable Cover Type
WLAN/WLAN & Bluetooth Combo	WM 1	Black	Transparent
	WM 2	Gray	
	WM 3	White	

Cable 1 is usually connected to antenna 1 (Main) on the module, and cable 2 to antenna 2 (Aux).

Removing the 3G Module

3G Module Removal Procedure

1. Turn **off** the computer, remove the battery (*page 2 - 5*).
2. Locate the module, it is visible at point 1 (*Figure 7a*).
3. Carefully disconnect the cables 2 & 3, and then remove the screw 4 from the module (*Figure 7b*).
4. The module 3 will pop-up (*Figure 7c*).
5. Lift the module 5 up and off the computer (*Figure 7d*).

Figure 7
3G Module Removal

a. Locate the module.
b. Disconnect the cables and remove the screw.
c. The module will pop-up.
d. Lift the module up off the socket.

a.

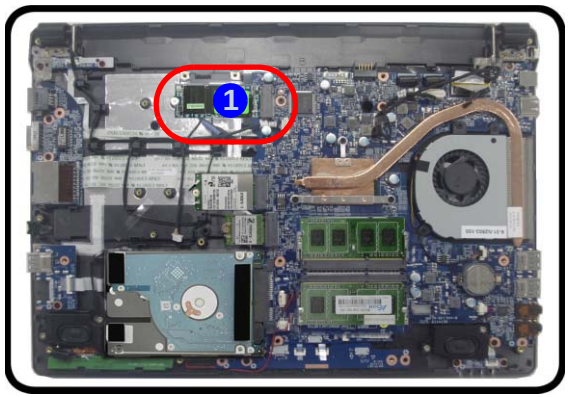

b.

c.

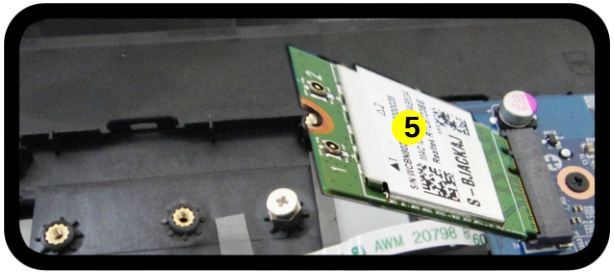

d.

5. 3G Module

- 1 Screw

Figure 8
M.2 SSD Module Removal

a. Locate the M.2 SSD.
b. Remove the screw.
c. The M.2 SSD module will pop up.

Removing and Installing the M.2 SSD Module

m.2 SSD Removal Procedure

1. Turn **off** the computer, turn it over to remove the battery (***page 2 - 5***) and bottom cover (***page 2 - 6***).
2. The M.2 SSD module will be visible at point 1 on the mainboard (***Figure 8a***).
3. Remove the screw 2 (***Figure 8b***)
4. The M.2 SSD module 3 (***Figure 8c***) will pop-up, and you can remove it from the computer.

a.

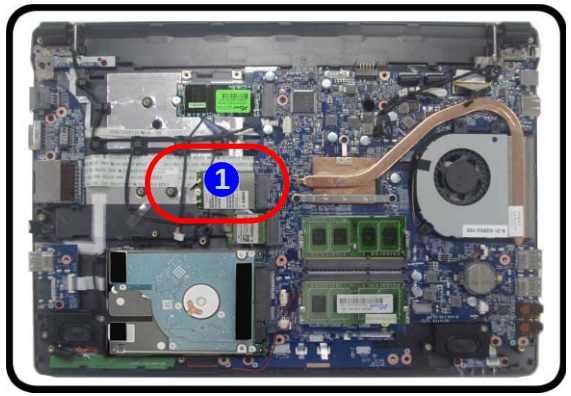

b.

c.

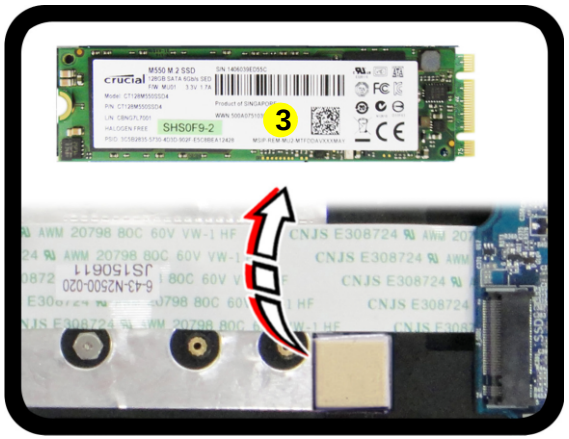

3.M2 SATA-1 Module

- 1 Screw

M.2 SSD Installation Procedure

1. Place the thermal pad (1) on the bottom case as shown (***Figure 9a***).
2. Insert the module (2) in the computer (***Figure 9b***).
3. Tighten the screw (3) to secure it in place (***Figure 9c***).

Figure 9
M.2 SSD Module Installation

a. Place the thermal pad.
b. Insert the module.
c. Tighten the screw.

a.

b.

c.

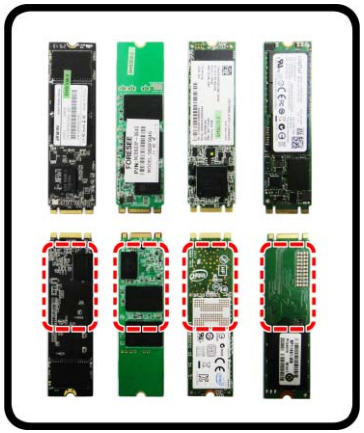

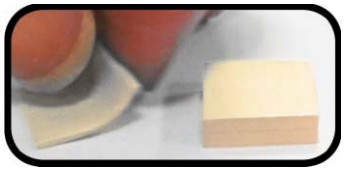

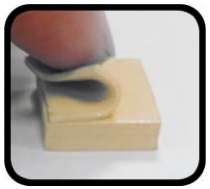

Thermal Pad

Be sure to place the thermal pad's adhesive side down onto the mainboard surface.

The thermal pad's thickness differ for different M.2 SSD module:

- For module with chip, use 2.5mm thick thermal pad.
- For module without chip, use 3.5mm thick thermal pad.

1. Thermal Pad
2. M.2 SSD Module

- 1 Screw

Figure 10
CCD Removal

a. Remove the rubber cover and screws.
b. Remove the hinge cover.
c. Run your fingers around the inner frame of the LCD panel at the points indicated by the arrows.
d. Lay the computer down on a flat surface with the top case up forming a 90 degree angle. Push the LCD front panel upwards before carefully lifting it up.

Removing the CCD

1. Turn **off** the computer, turn it over to remove the battery (***page 2 - 5***) and then separate the LCD Panel from the bottom case.
2. Remove the rubber covers 1 and screws 2 - 7 (***Figure 10a***).
3. Remove the hinge cover 8 of the panel hinge (***Figure 10b***).
4. Run your fingers around the inner frame of the LCD panel at the points as indicated by the arrows 9 - 12 .
5. Lay the computer down on a flat surface with the top case up forming a 90 degree angle. Push the LCD front cover 13 upwards before carefully lifting it up (***Figure 10d***).

a.

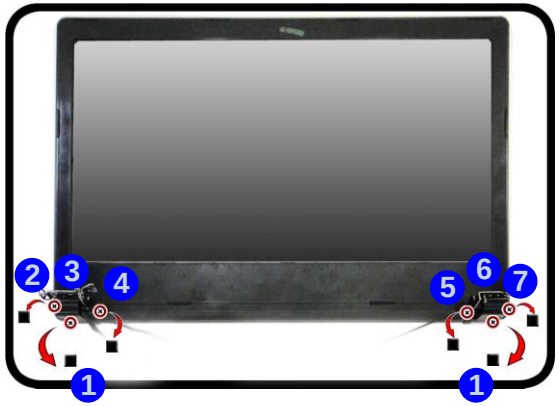

c.

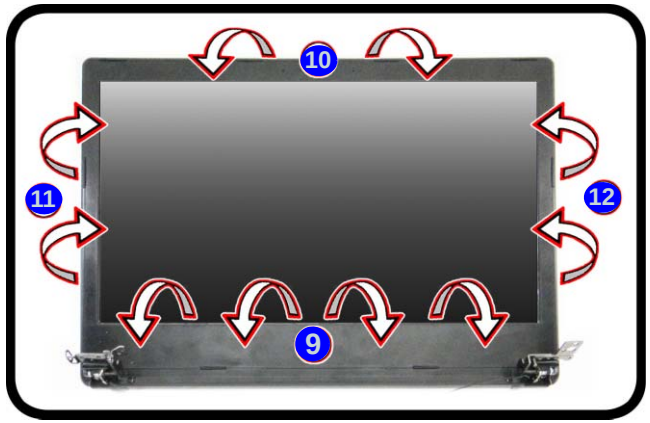

b.

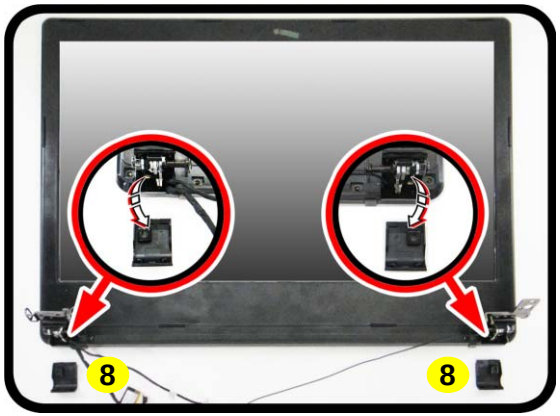

d.

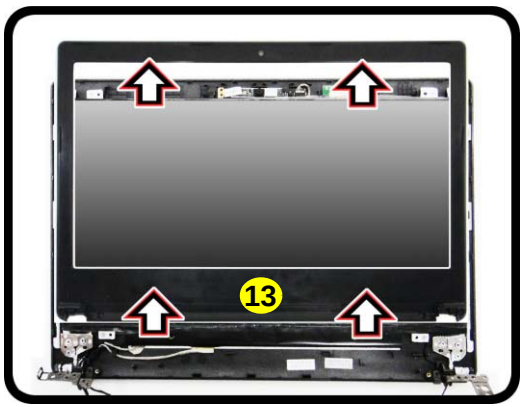

8. Hinge Cover
13. LCD Front Cover

- 6 Screws

6. Remove the LCD front cover 13 (*Figure 11e*).
7. Disconnect the cable 14 (*Figure 11f*).
8. Remove the CCD module 15 (*Figure 11g*).
9. Reverse the process to install a new CCD module.

Figure 11
CCD Removal (cont'd.)

e. Remove the LCD front cover.
f. Disconnect the cable.
g. Remove the CCD module.

e.

f.

g.

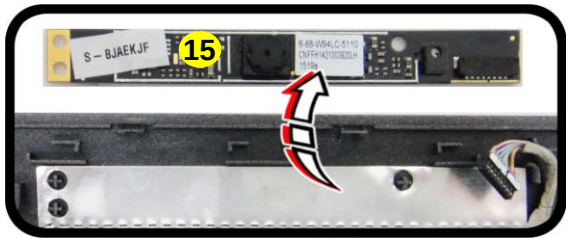

15. CCD Module

Appendix A:Part Lists

This appendix breaks down the ***N240JU / N241JU*** series notebook's construction into a series of illustrations. The component part numbers are indicated in the tables opposite the drawings.

Note: This section indicates the *manufacturer's* part numbers. Your organization may use a different system, so be sure to cross-check any relevant documentation.

Note: Some assemblies may have parts in common (especially screws). However, the part lists DO NOT indicate the total number of duplicated parts used.

Note: Be sure to check any update notices. The parts shown in these illustrations are appropriate for the system at the time of publication. Over the product life, some parts may be improved or re-configured, resulting in *new* part numbers.

Part List Illustration Location

The following table indicates where to find the appropriate part list illustration.

Table A - 1
Part List Illustration Location

Part	
Top	*page A - 3*
Top (TV Tuner)	*page A - 4*
Bottom	*page A - 5*
LCD	*page A - 6*
HDD	*page A - 7*

Top

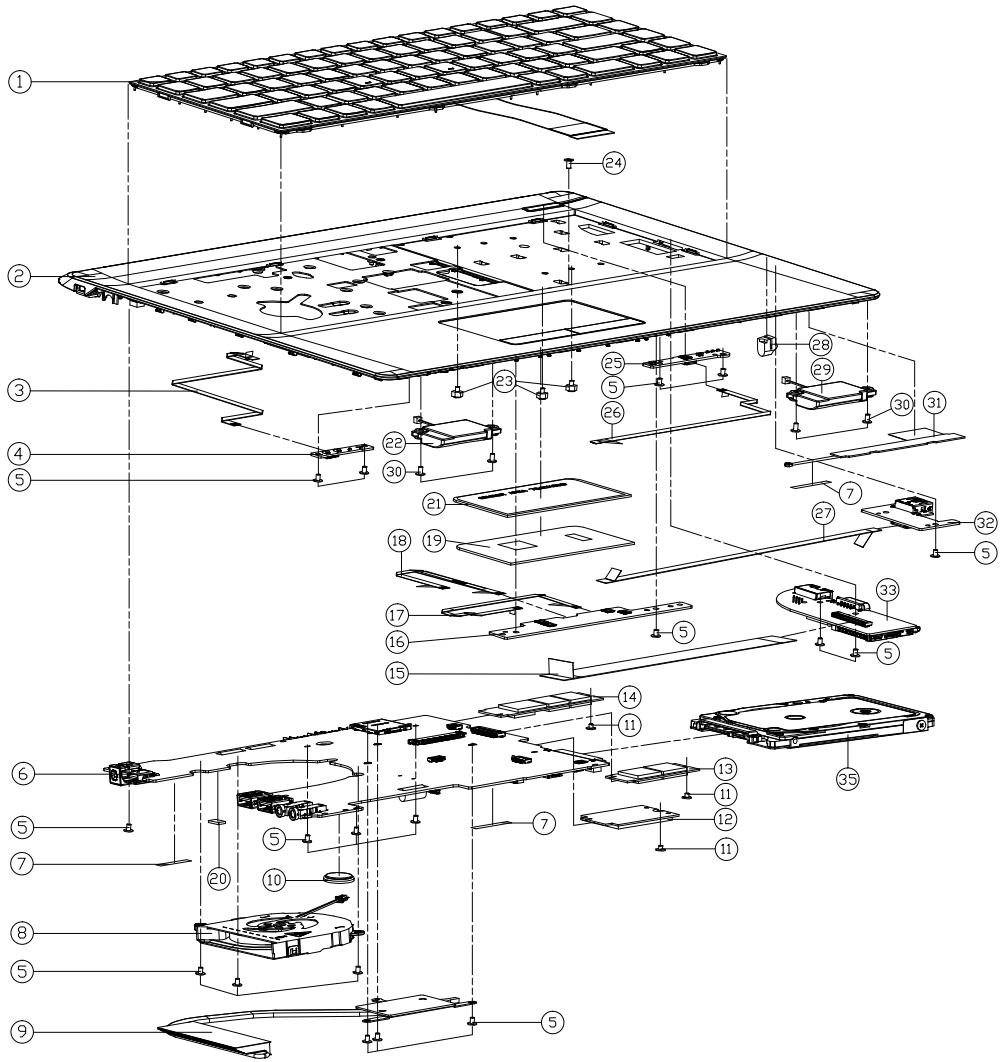

ITEM	PART NAME	PART NO	REMARK
1	WINB K/B USA COLACOOK FRAME (US) MODULE W330AU	6-79-W330AU0K-010-W	
2	TOP CASE MODULE N240JU	6-39-N24J2-012	
2	TOP CASE MODULE N240JU-C	6-39-N24J2-012-C	
2	TOP CASE MODULE N241JU	6-39-N2412-010	
3	FFC CABLE LED MB 210MM 60V 8PIN N240LU	6-43-N24J0-031	
4	LED BOARD V3.0 N240LU	6-77-N2404-D03	
5	SCREW M2*3L KI BZ ICT NY (DD=Ø4.5,DT=0.4)	6-35-B6120-3RD	
6	PWB BOARD CPVFS-5GMW2CB2 VCM (CPPAN,EDAV0 PPU20 CHRGE,TV TUNER) N240LU	6-77-N240JU00-D02A-1D	
6	PWB BOARD CPVFS-5GMW2CB2 VCM (CPPAN LT,PPU20 CHRGE,TV TUNER) N240LU	6-77-N240JU00-D02A-3F	
6	PWB BOARD CPVFS-5GMW2CB2 VCM (CPPAN,EDAV0 PPU20 CHRGE,TV TUNER) N240LU	6-77-N240JU00-D02A-1C	
6	PWB BOARD CPVFHB2B2CB2 VCM (CPPAN,EDAV0 PPU20 CHRGE,TV TUNER) N240LU	6-77-N240JU00-D02A-1E	
6	PWB BOARD CPVFS-5GMW2CB2 VCM (CPPAN,EDAV0 PPU20 CHRGE,TV TUNER) N240LU	6-77-N240JU00-D02A-1F	
6	PWB BOARD CPVF2CB2B2CB2 VCM (CPPAN,EDAV0 PPU20 CHRGE,TV TUNER) N240LU	6-77-N240JU00-D02A-1G	
7	TAPE MYLAR (B),MYLAR M550J	6-40-M55J2-020	
8	FAN MODULE (FORCECON) N250LU	6-31-N2503-101	
9	HEATSINK MODULE N250JU	6-31-N25J3-100	
10	BATTERY 3V 220MA BBBCR2032B (KTS)	6-23-6A2B2-030	
11	SCREW M2*2L KI NI ICT NY (DD=Ø5 ,T=0.5)	6-35-B1120-2R0	
12	HDD 1T 5400 [illegible]	6-88-S210F-9400	
12	HDD 4T 5400 [illegible]	6-88-N240F-4200	
12	HDD 1T 5400 [illegible]	6-88-N170F-5100	
12	HDD 4T 5400 INTEL STORE FOR 2000GB/HDD IN STEPPING PCS E NO 2230 202 [illegible]	6-88-W95LF-4240	
12	HDD 4T 5400 INTEL STORE FOR 2000GB/HDD IN STEPPING PCS E NO 2230 202 [illegible]	6-88-W95LF-4220	
12	HDD 4T 5400 [illegible]	6-88-N25JF-4200	
13	SSD M2 2280 500GB CRUCIAL CT500MX200SSD4 (MX200) SATA3 MLC	6-85-D515A-100	
13	SSD M2 2280 250GB CRUCIAL CT250MX200SSD4 (MX200) SATA3 MLC	6-85-D51R0-100	
13	SSD M2 2280 512GB SAMSUNG MZNPV512HDGL-00000 (SM951) PCIE GEN4 MLC	6-85-D515B-S00	
13	SSD M2 2280 512GB CRUCIAL MTFTDAV512MNF (M600) SATA3 MLC	6-85-D515B-101	
13	SSD M2 2280 256GB SAMSUNG MZNLN256HCHP(000) (PM871) SATA3 V2 EVO	6-85-D51R6-S01	
14	LTE 4G W CPS MODULE (WITHOUT MICROPHONE) EMW,FOR JAPAN NOT W/ CARD USB INTERFACE (EC200U)	6-88-W3306-8830	
14	LTE 4G CPS MODULE (WITHOUT MICROPHONE) EMW,FOR TELECOMCOM (EC200U) NOT W/ CARD USB INTERFACE (EC200U)	6-88-W3306-8841	
14	WCDMA HUAWEI MU736 HSPA+ NOTT CARD USB INTERFACE WITHOUT GPS (EC200U)	6-88-S210W-8810	
15	FFC CABLE FOR AUDIO TO MB 130MM 60V 40PIN N240JU	6-43-N24J0-010	
16	CLICK BOARD V4.0 N240LU	6-77-N2402-D04	
17	FFC CABLE CLICK MB 148.5MM 60V 6PIN N240JU	6-43-N24J0-021	
18	FFC CABLE TP CLICK 120MM 60V 8PIN N240JU	6-43-N24J0-061	
19	TP MODULE PROTECT MYLAR (PET+TESA9965) N240JU	6-40-N24J2-020	
20	HEATSINK RUBBER SILICONE (7*5*2) N240JU	6-47-N24J2-070	
21	TOUCH PAD SYNAPTICS 84*42 TM-03175-001 N240LU	6-49-N2403-010	
22	SPK+CABLE L 23MM 15W 4Ω 250MM DS-25H-ML-R6-HF (TED) N250LU	6-23-5N250-0L2	
23	SCREW M2*2L (H=2.5) B-5D STEEL ICT NY FOR NOTT CARDCHANGE MATERIAL)	6-35-ZA120-2R5	
24	SCREW M2.5*6L K BZ ICT NY	6-35-82125-6RA	
25	POWER SW BOARD V5.0 N240LU	6-77-N240S-D05	
26	FFC CABLE POWER MB 169.5MM 60V 8PIN N240JU	6-43-N24J0-051	
27	FFC CABLE USB MB 167MM 60V 16PIN N240JU	6-43-N24J0-041	
28	TV RUBBER SILICONE N240JU	6-47-N24J2-020	
29	SPK+CABLE R 23MM 15W 4Ω 250MM DS-25H-ML-R7-HF (TED) N250LU	6-23-5N250-0R2	
30	SCREW M2*4L KI NI ICT NY (DD=Ø4.5,DT=0.4)	6-35-B1120-4RE	
31	ANTENNA PCEH 2G/4LTE WAV LTE-2 PCB 0.7G/0.8G/1.5G/1.8G/1.9G/2.1G/2.5GHZ L=300MM	6-23-7N250-021	
32	USB BOARD V4.0 N240LU	6-77-N2403-D04	
33	MULTI BOARD V4.0 N240LU	6-77-N2407-D04	
34	W/O HDD ASS'Y N240LU	6-79-N240LU0J-010	
34	W/HDD ASS'Y N240LU	6-79-N240LU0J-020	

Figure A - 1
Top

Top (TV Tuner)

Figure A - 2
Top (TV Tuner)

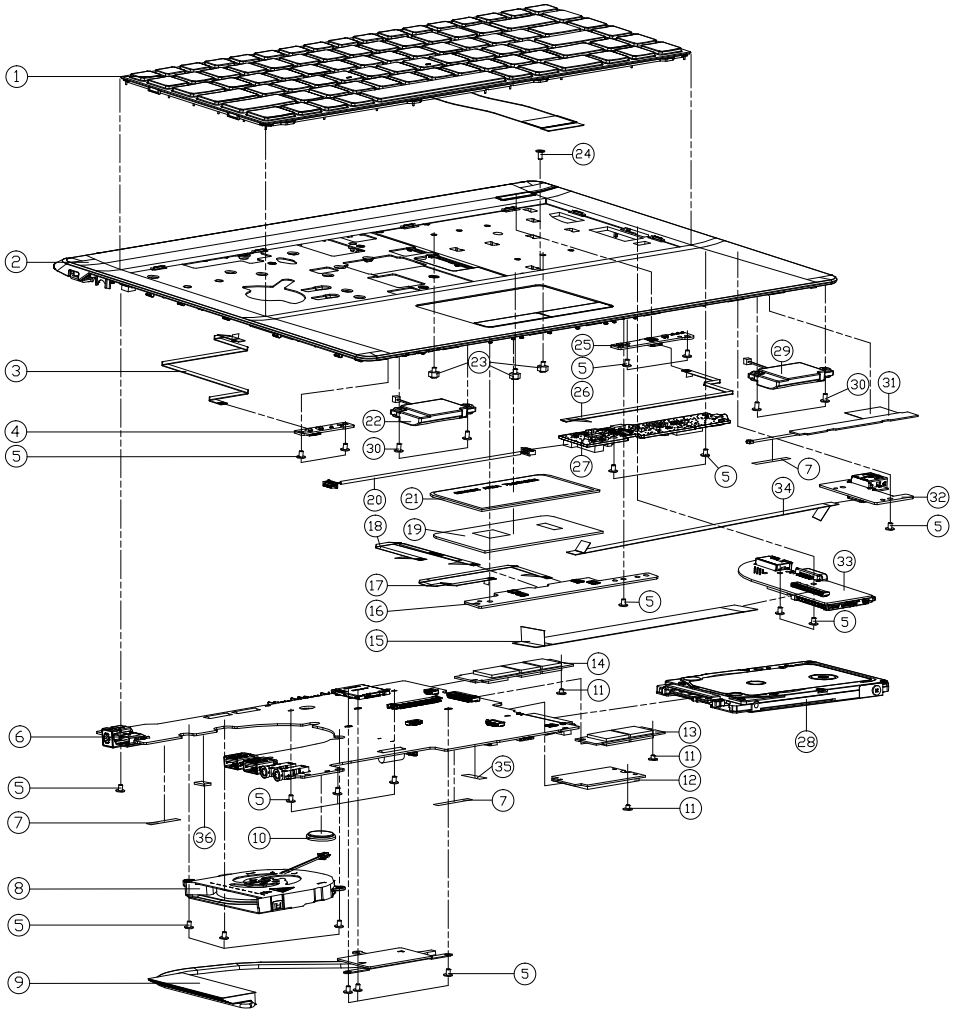

ITEM	PART NAME	PART NO	REMARK
1	WIN8 K/B USA (BLACK% FRAME (US) MODULE W330AU	6-79-W330AU0K-010-W	
2	TOP CASE MODULE N240JU	6-39-N24J2-012	
2	TOP CASE MODULE N240JU-C	6-39-N24J2-012-C	
3	FFC CABLE LED MB 210MM 60V 8PIN N240LU	6-43-N24J0-031	
4	LED BOARD V3.0 N240LU	6-77-N2404-D03	
5	SCREW M2*3L KI BZ ICT NY (DD=ø4.5,DT=0.4)	6-35-B6120-3RD	
6	MAIN BOARD CPU(I-5200U/2.5G) VGA (GPU(GT)) CHARGE,TV TUNER N240LU	6-77-N240JU00-D02A-C	
6	MAIN BOARD CPU(I-5200U/2.5G) VGA (GPU(GT)) CHARGE,TV TUNER N240LU	6-77-N240JU00-D02A-D	
7	TAPE MYLAR (B),MYLAR M550J	6-40-M55J2-020	
8	FAN MODULE (FORCECON) N250LU	6-31-N2503-101	
9	HEATSINK MODULE N250JU	6-31-N25J3-100	
10	BATTERY 3V 220MA BBBCR2032B (KTS)	6-23-6A2B2-030	
11	SCREW M2*2L KI NI ICT NY (DD=ø5 ,T=0.5)	6-35-B1120-2R0	
12	[illegible]	6-88-S210F-9400	
12	[illegible]	6-88-N240F-4200	
12	[illegible]	6-88-N170F-5100	
12	[illegible]	6-88-W95LF-4240	
12	[illegible]	6-88-W95LF-4220	
12	[illegible]	6-88-N25JF-4200	
13	SSD M2 2280 500GB CRUCIAL CT500M2100SSD4 (MX200) SATA3 MLC	6-85-D515A-100	
13	SSD M2 2280 256GB CRUCIAL CT250MX200SSD4 (MX200) SATA3 MLC	6-85-D51R0-100	
13	SSD M2 2280 512GB SAMSUNG MZHPV512HDGL-XXXXX (SM950) PCIE GEN MLC	6-85-D515B-S00	
13	SSD M2 2280 512GB CRUCIAL MX100AV512CMF (M600) SATA3 MLC	6-85-D515B-101	
13	SSD M2 2280 256GB SAMSUNG MZMLW256HCHP(000) (PM870) SATA3 V2 EVO	6-85-D51R6-S01	
14	LIC & IR GPS MODULE NOT(DECIMOMAL) W/USB/FOR JAPAN NOT V2 CARD KB INTERFACE VERSION	6-88-W3306-8830	
14	LIC & PC (DECIMO) MODULE (DIGITAL) W/USB/FOR TAIWAN V0 (CHECKED IN JAPAN NOT V2 CARD KB INTERFACE VERSION	6-88-W3306-8841	
14	WCDMA (HANGE) NOT(G.H)FOR NOT CARD USB INTERFACE WITHOUT GPS S210TU	6-88-S210W-8810	
15	FFC CABLE FOR AUDIO TO MB 130MM 60V 40PIN N240JU	6-43-N24J0-010	
16	CLICK BOARD V4.0 N240LU	6-77-N2402-D04	
17	FFC CABLE CLICK MB 148.5MM 60V 6PIN N240JU	6-43-N24J0-021	
18	FFC CABLE TP CLICK 120MM 60V 8PIN N240JU	6-43-N24J0-061	
19	TP MODULE PROTECT MYLAR (PET+TESM965) N240JU	6-40-N24J2-020	
20	WIRE CABLE FOR TV TUNER L=80MM (5PIN TO 4PIN AUDIO IN/O LABLE NL VPM0TU	6-43-W940T-031	
21	TOUCH PAD SYNAPTICS B4*42 TM-03175-001 N240LU	6-49-N2403-010	
22	SPK(CABLE L 23*44 15W 4? 35MM DG-25J4-NL-46-HF (TEX) N250LU	6-23-5N250-0L2	
23	SCREW M2*2.5L (H=2.5 D=5) STEEL ICT NI FOR NOT CARD(CHANGE MATERIAL)	6-35-ZA120-2R5	
24	SCREW M2.5*6L K BZ ICT NY	6-35-82125-6RA	
25	POWER SW BOARD V5.0 N240LU	6-77-N240S-D05	
26	FFC CABLE POWER MB 169.5MM 60V 8PIN N240JU	6-43-N24J0-051	
27	DIGITAL TV TUNER AVERMEDIA S/W A857 W940TU	6-88-W9407-4600	
28	W/O HDD ASS'Y N240LU	6-79-N240LU0J-010	
28	W/HDD ASS'Y N240LU	6-79-N240LU0J-020	
29	SPK(CABLE R 23*44 15W 4? 250MM DG-25J4-NL-47-HF (TEX) N250LU	6-23-5N250-0R2	
30	SCREW M2*4L KI NI ICT NY (DD=ø4.5,DT=0.4)	6-35-B1120-4RE	
31	ANTENNA (PCM 3G+LTE WIFI LTE-? PCB 0.0%/0.0%/0.0%/0.0%/0.5%/25%/25%/0.0% L=80MM	6-23-7N250-021	
32	USB BOARD V4.0 N240LU	6-77-N2403-D04	
33	MULTI BOARD V4.0 N240LU	6-77-N2407-D04	
34	FFC CABLE USB MB 167MM 60V 16PIN N240JU	6-43-N24J0-041	
35	TV TUNER MYLAR PET N240JU	6-40-N24J2-070	
36	HEATSINK RUBBER SILICONE (7*5*2) N240JU	6-47-N24J2-070	

Bottom

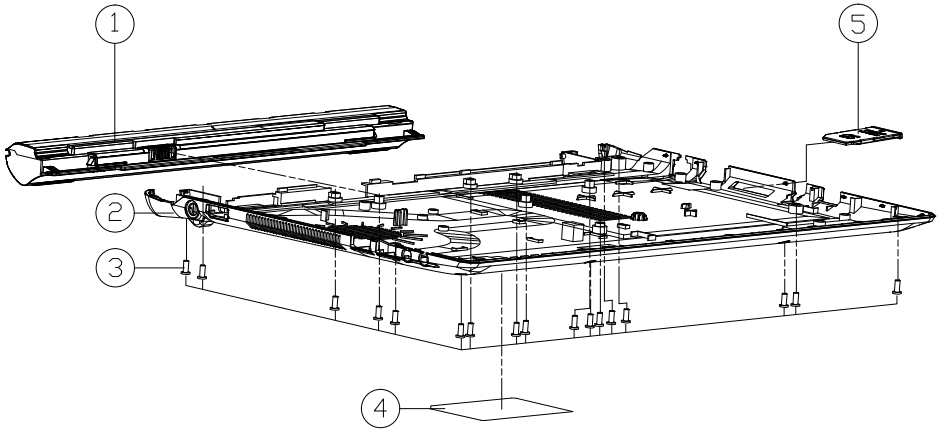

ITEM	PART NAME	PART NO	REMARK
1	BATP S LI 11.1V/22Wh/24Ah 3CP 3MV/3Ah (TI GAUGE IC) (TEXTURE) 98072256F N240JU	6-87-N24JS-42F2	
1	BATP S LI 11.1V/22Wh/24Ah 3CP GETAC/SANYO (TI GAUGE IC) (TEXTURE) 54C0875000 N240JU	6-87-N24JS-4UF2-1	
1	BATP S LI 14.8V/22Wh/32Ah 4CP 3MV/3Ah (TI GAUGE IC) (TEXTURE) 98072255F N240JU	6-87-N24JS-42F2-1	
1	BATP S LI 14.8V/22Wh/32Ah 4CP GETAC/SANYO (TI GAUGE IC) (TEXTURE) 54C0875000 N240JU	6-87-N24JS-4UF2	
1	BATP S LI 15.2V/25.6Wh/44Ah 4CP 3MV/3Ah (TI GAUGE IC) (TEXTURE) 98072253F N240JU	6-87-N24JS-42L2	
1	BATP S LI 14.8V/30Wh/44Ah 4CP GETAC/LG (TI GAUGE IC) (TEXTURE) 54C0875000 N240JU	6-87-N24JS-4EB2	
2	BOTTOM CASE MODULE N240JU	6-39-N24J3-012	
2	BOTTOM CASE MODULE N240LU-C	6-39-N2403-011-C	
3	SCREW M2.5*6L K BZ ICT NY	6-35-82125-6RA	
4	PRODUCT LABEL FOR N240JU	6-45-N240JU03-010	
4	PRODUCT LABEL FOR N241JU	6-45-N241JU03-010	
5	DUMMY SD PSUH PUSH TYPE PC+ABS (C7230P-70DE) W9705UW	6-42-W9708-010	

Figure A - 3
Bottom

LCD

Figure A - 4
LCD

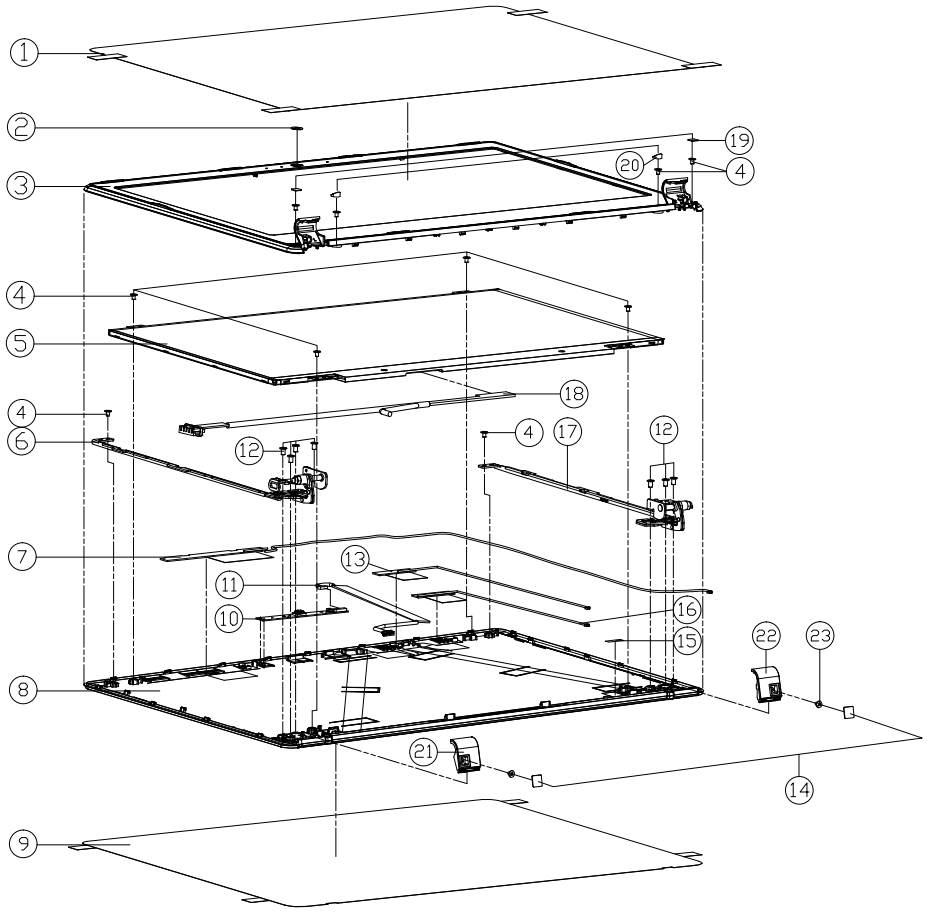

ITEM	PART NAME	PART NO	REMARK
1	FRONT COVER PROTECT MYLAR (PET+3M 8915) N240JU	6-40-N24J1-021	
2	CCD LENS PC P750ZM	6-42-P7501-011	
3	FRONT COVER MODULE N240JU	6-39-N24J1-012	
4	SCREW M2*3L KI BZ ICT NY (DD=ø4.5,DT=0.4)	6-35-B6120-3RD	
5	LCD 14.0" HD EDP/GLARE TYPE BOE HB140WX1-301 (LED) 3.6MM	6-50-J8136-Z01	
5	LCD 14.0" HD (EDP) GLARE TYPE AU B140XTN03.4 (LED) 3.6MM	6-50-J8136-G12	
5	LCD 14.0" HD+ CHIMEI N140FGE-EA2 (LED) 3.0MM (EDP)	6-50-JA130-D00	
5	LCD 14.0" FHD IPS (EDP) LG LP140WF1-SPK1 (LED) 3.0MM	6-50-JB230-L01	
6	LCD HINGE L (SGCC+SK7) SH N240JU	6-33-N24J1-0L2	
7	ANTENNA IPEX4 3G+LTE WGT L1E-1 PCB 0.7G/0.8G/0.9G/1.8G/1.9G/2.1G/2.6GHZ L=600MM N250LU	6-23-7N250-010	
8	BACK COVER MODULE N240JU	6-39-N24J1-022	FOR N240JU/LU
8	BACK COVER MODULE N240LU-C	6-39-N2401-020-C	FOR N240JU-C/LU-C
8	BACK COVER MODULE N241JU	6-39-N2411-020	FOR N241JU/LU
9	BACK COVER PROTECT MYLAR (PET+3M 8915) N240JU	6-40-N24J1-031	
10	UVC CAMERA DESIGN FIX DMBV8ATK-3M IN HD HYNIX H8G5 V9A0LU FW6A0L W/LED W/2B+MIC	6-88-W94LC-4910	
10	UVC CAMERA CHECOM FIX CMFTAHZM0029ELU IN HD HYNIX H8G5 V9A0LU FW6A0L W/LED W/2B+MIC	6-88-W94LC-5120	OPTION
10	UVC CAMERA DESIGN FIX DMBV8ATK-3M IN HD HYNIX H8G5 V9A0LU FW6A0L W/LED W/B+MIC	6-88-W94LC-4900	OPTION
10	UVC CAMERA CHECOM FIX CMFTAHZM0029ELU IN HD HYNIX H8G5 V9A0LU FV3Z6L W/LED W/B+MIC	6-88-W94LC-5110	OPTION
10	UVC CAMERA DESIGN FIX DMBV8ATK-3M IN HD HYNIX H8G5 V9A0LU FW6A0L W/LED W/2B+MIC(更換背膠)	6-88-W94LC-4911	OPTION
10	UVC CAMERA DESIGN FIX DMBV8ATK-3M IN HD HYNIX H8G5 V9A0LU FW6A0L W/LED W/B+MIC(更換背膠)	6-88-W94LC-4901	OPTION
11	WIRE CABLE FOR CCD D-MIC 500MM 3.3V 8P (HL) N250LU	6-43-N250T-010	
12	SCREW M2.5*4L KI NI ICT NY	6-35-21125-4R0	
13	ANTENNA IPEX4 WLAN WGT WL2 PCB AR 2.4G/5G L=600MM N240LU	6-23-7N240-010	
14	LCD HINGE MYLAR (MYLAR+3M 468) (7.5*7.5*0.14T) N240JU	6-40-N24J1-010	
15	TOP CASE MYLAR FR83 25*7*0.05 P180HM	6-40-P1802-030	
16	ANTENNA IPEX4 WLAN WGT WL1 PCB AL 2.4G/5GHZ WL1=600MM P870DM	6-23-7P870-010	
17	LCD HINGE R (SGCC+SK7) SH N240JU	6-33-N24J1-0R2	
18	WIRE CABLE FOR EDP 200MM 19V 40PIN (D OIL/LC CONLUSMOXS-HF) N240LU	6-43-N2401-011-L	
19	FRONT COVER SCREW MYLAR(PC+SM468)X5*5*0.35T) N150SD	6-40-N1501-010	
20	LCD BOTTOM RUBBER (SILICON RUBBER 80X5*5*0.8T) N240JU	6-47-N24J1-010	
21	BACK HINGE COVER L (TEIJIN TN-3713BX) N240JU	6-42-N24J1-0L1	
22	BACK HINGE COVER R (TEIJIN TN-3713BX) N240JU	6-42-N24J1-0R1	
23	.SCREW M2*4L KI NI ICT NY (DD=ø4.5,DT=0.4)	6-35-B1120-4RE	

HDD

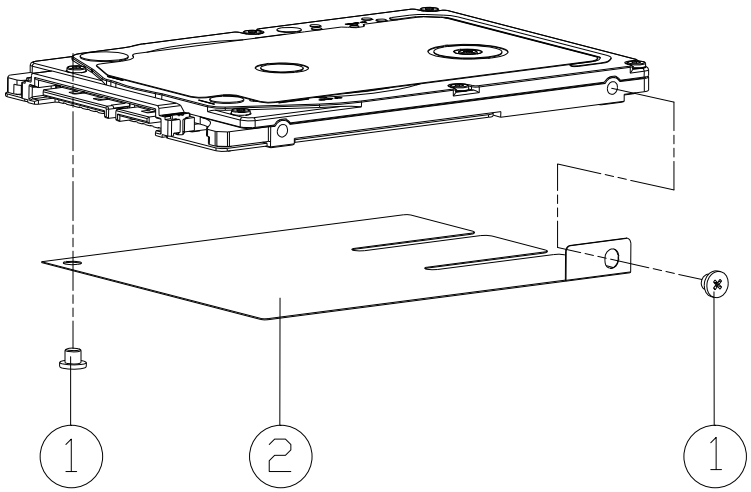

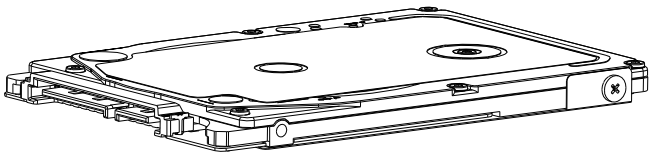

ITEM	PART NAME	PART NO	REMARK
1	SCREW M3*2.5L KI NI ICT NY	6-35-B1130-2R5	
2	HDD MYLAR (PET0.25T+CR2030) N240JU	6-40-N24JJ-011	

Figure A - 5
HDD

Appendix B: Schematic Diagrams

This appendix has circuit diagrams of the ***N240JU / N241JU*** notebook's PCB's. The following table indicates where to find the appropriate schematic diagram.

Diagram - Page	Diagram - Page	Diagram - Page
System Block Diagram - Page B - 2	*DDR3 SO-DIMM_1 - Page B - 15*	*VDDQ_VTT, 1.5VS, 1.8VS - Page B - 28*
Processor 1/11 - Page B - 3	*HDMI - Page B - 16*	*1.0V Series - Page B - 29*
Processor 2/11 - Page B - 4	*Panel - Page B - 17*	*VCore, VCCGT, VCCSA, VCCIO - Page B - 30*
Processor 3/11 - Page B - 5	*Conn, CCD, Fan, T/P, TV - Page B - 18*	*NCP81206 Regulator - Page B - 31*
Processor 4/11 - Page B - 6	*PS8625 - Page B - 19*	*Charger, DC-In - Page B - 32*
Processor 5/11 - Page B - 7	*SATA, LED, KB, G-Sensor - Page B - 20*	*USB Board - Page B - 33*
Processor 6/11 - Page B - 8	*USB, TPM - Page B - 21*	*CRT - Page B - 34*
Processor 7/11 - Page B - 9	*WLAN/BT, 3G/mSATA - Page B - 22*	*RTL8411B - Page B - 35*
Processor 8/11 - Page B - 10	*NGFF_M SSD - Page B - 23*	*Power SW Board - Page B - 36*
Processor 9/11 - Page B - 11	*Audio Codec - Page B - 24*	*Click Board - Page B - 37*
Processor 10/11 - Page B - 12	*KBC ITE IT8587 - Page B - 25*	*LED Board - Page B - 38*
Processor 11/11 - Page B - 13	*3V, 5V, 3VS, 5VS, CTL Signal - Page B - 26*	*HDD Board - Page B - 39*
DDR3 SO-DIMM_0 - Page B - 14	*VDD3, VDD5 - Page B - 27*	

Table B - 1
SCHEMATIC DIAGRAMS

Version Note

The schematic diagrams in this chapter are based upon version 6-7P-N24J7-003. If your mainboard (or other boards) are a later version, please check with the Service Center for updated diagrams (if required).

System Block Diagram

Sheet 1 of 38
System Block Diagram

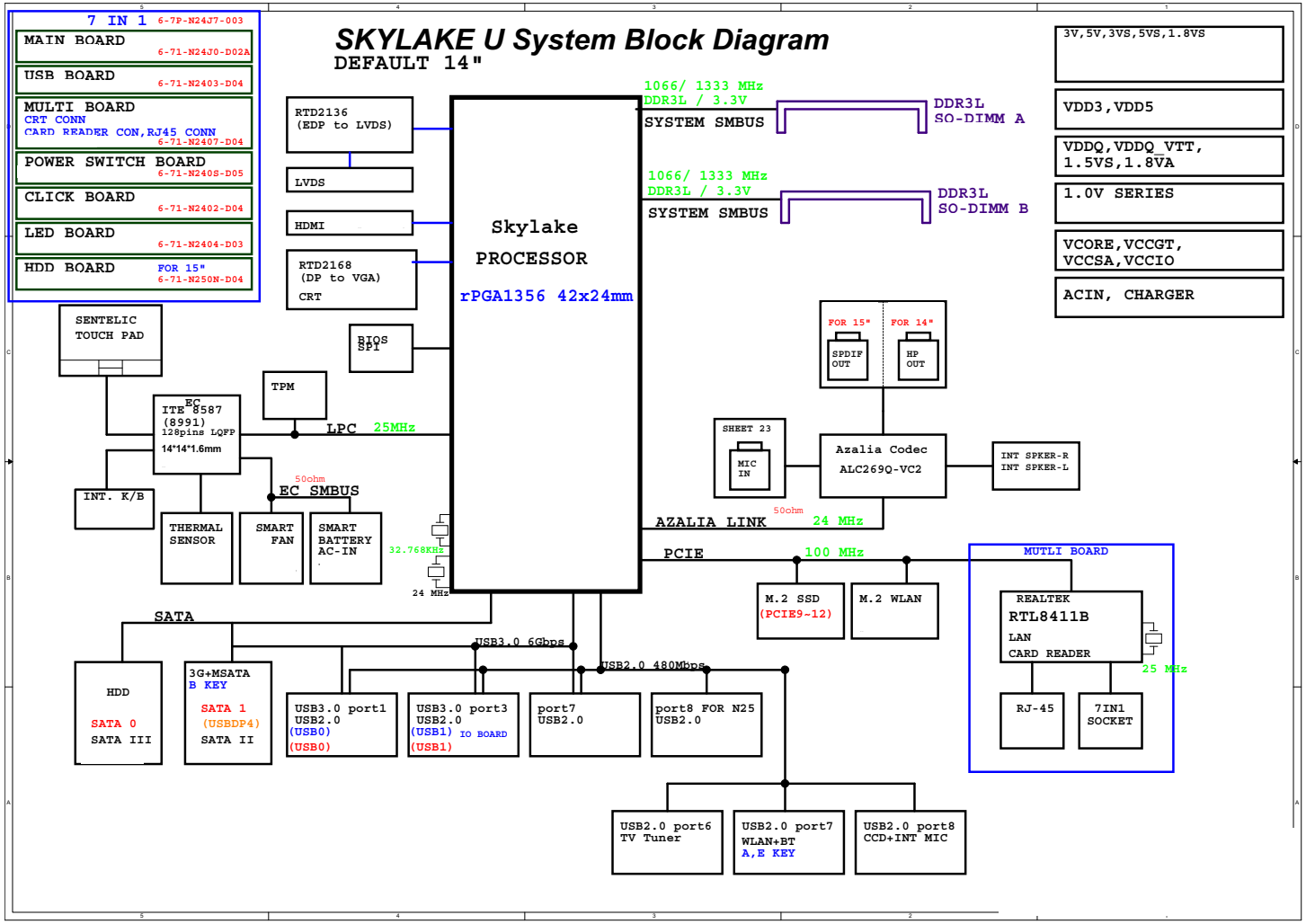

Processor 1/11

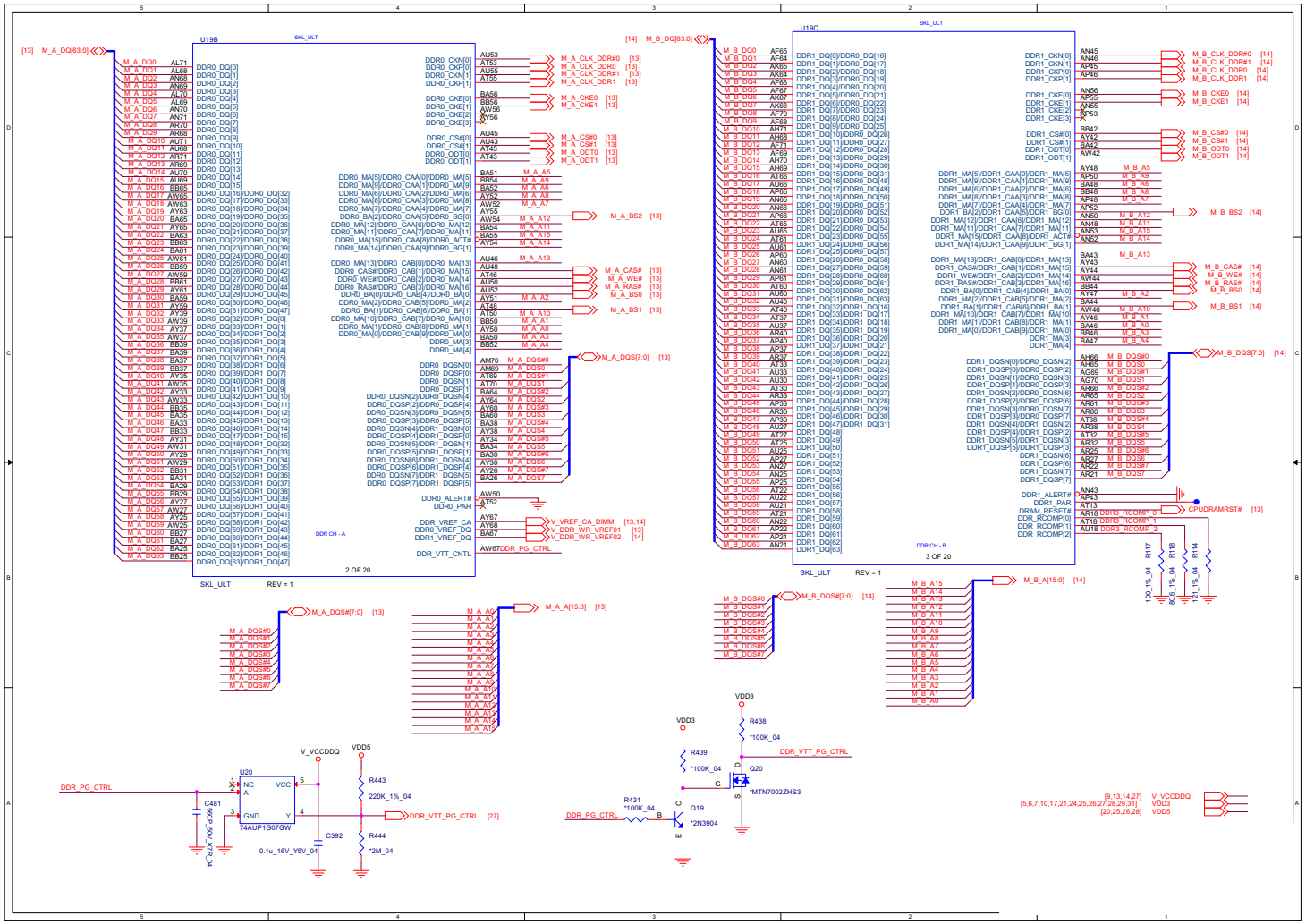

Sheet 2 of 38
Processor 1/11

B.Schematic Diagrams

Processor 2/11

Sheet 3 of 38
Processor 2/11

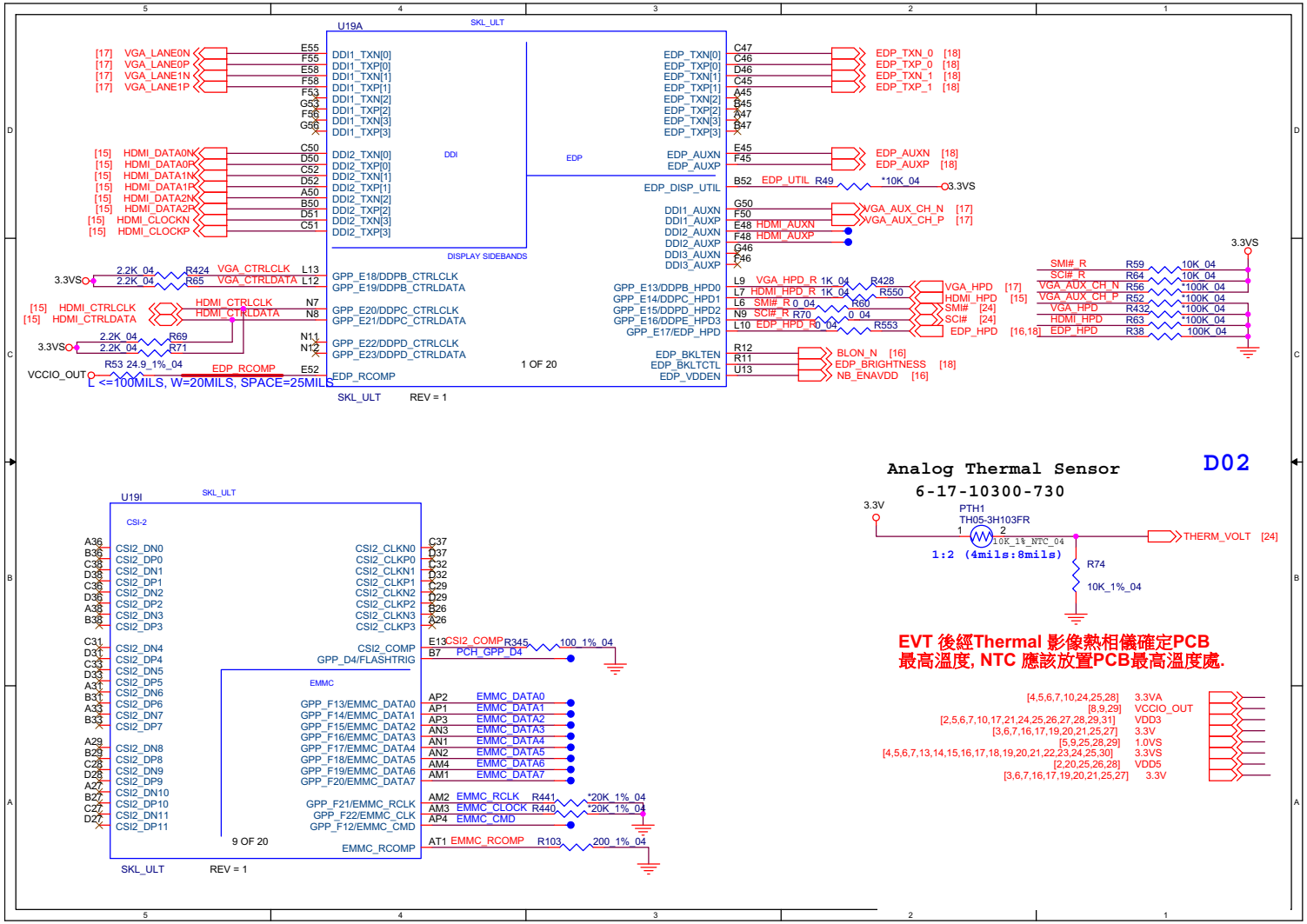

Processor 3/11

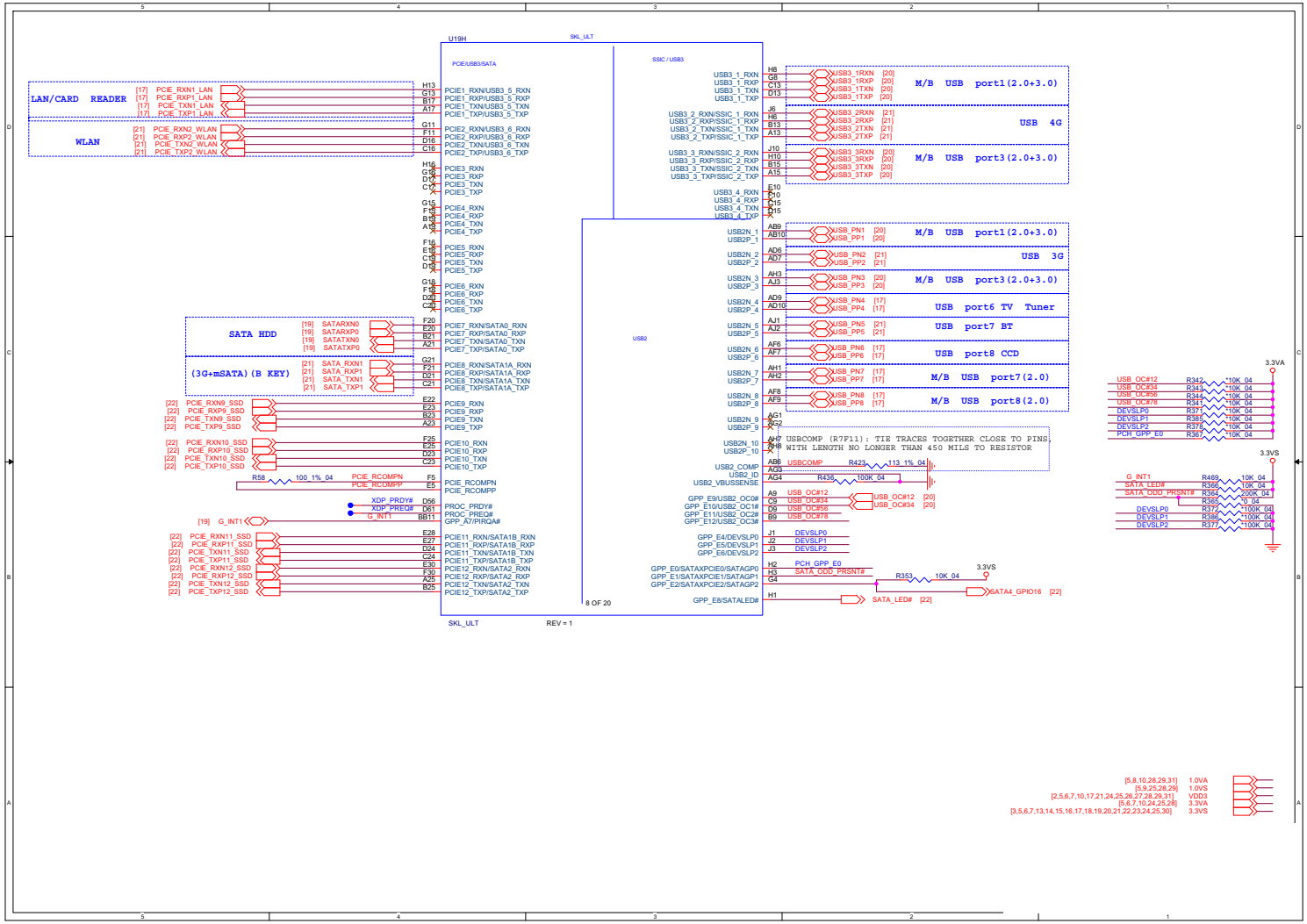

Sheet 4 of 38
Processor 3/11

Processor 4/11

Sheet 5 of 38
Processor 4/11

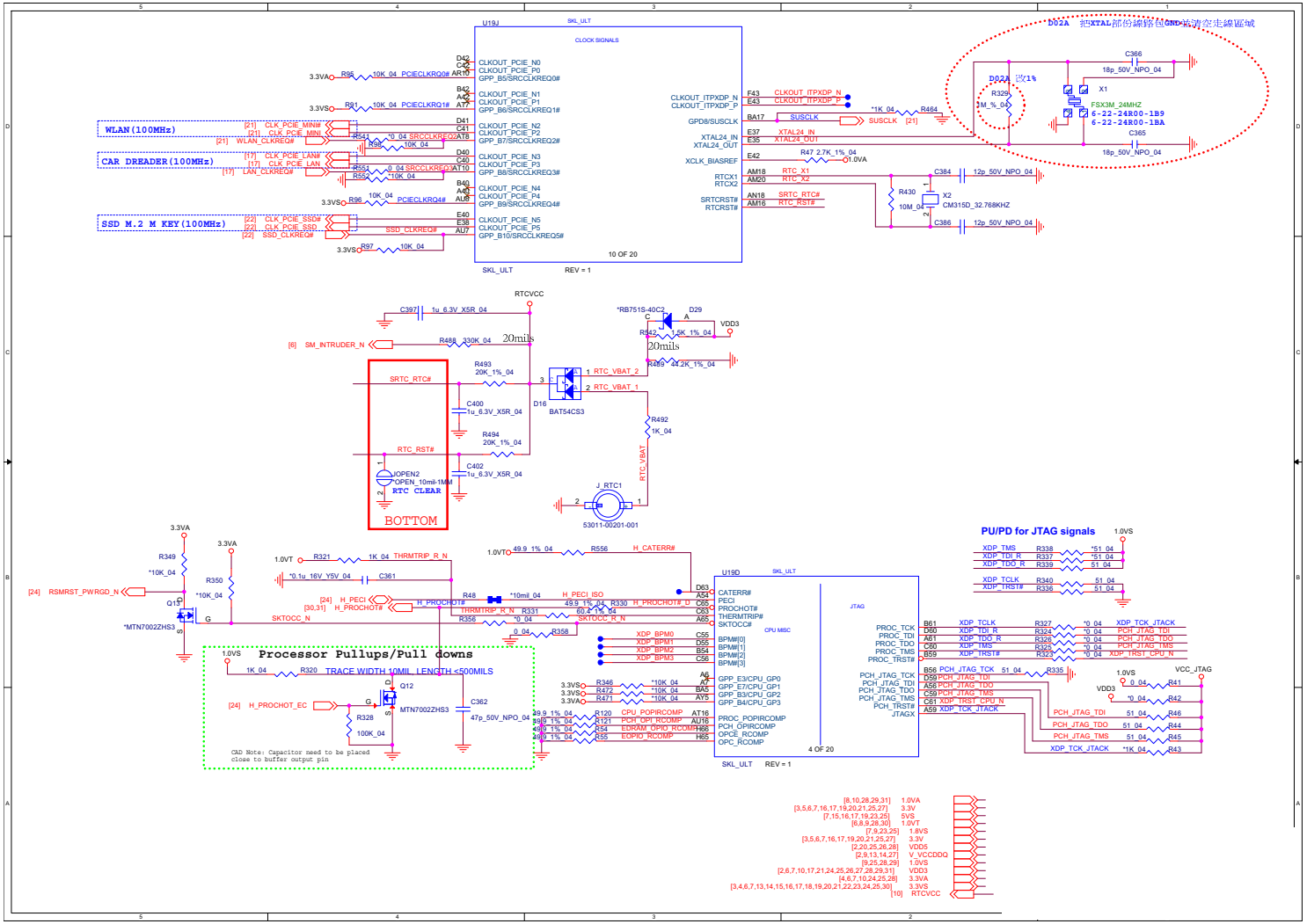

Processor 5/11

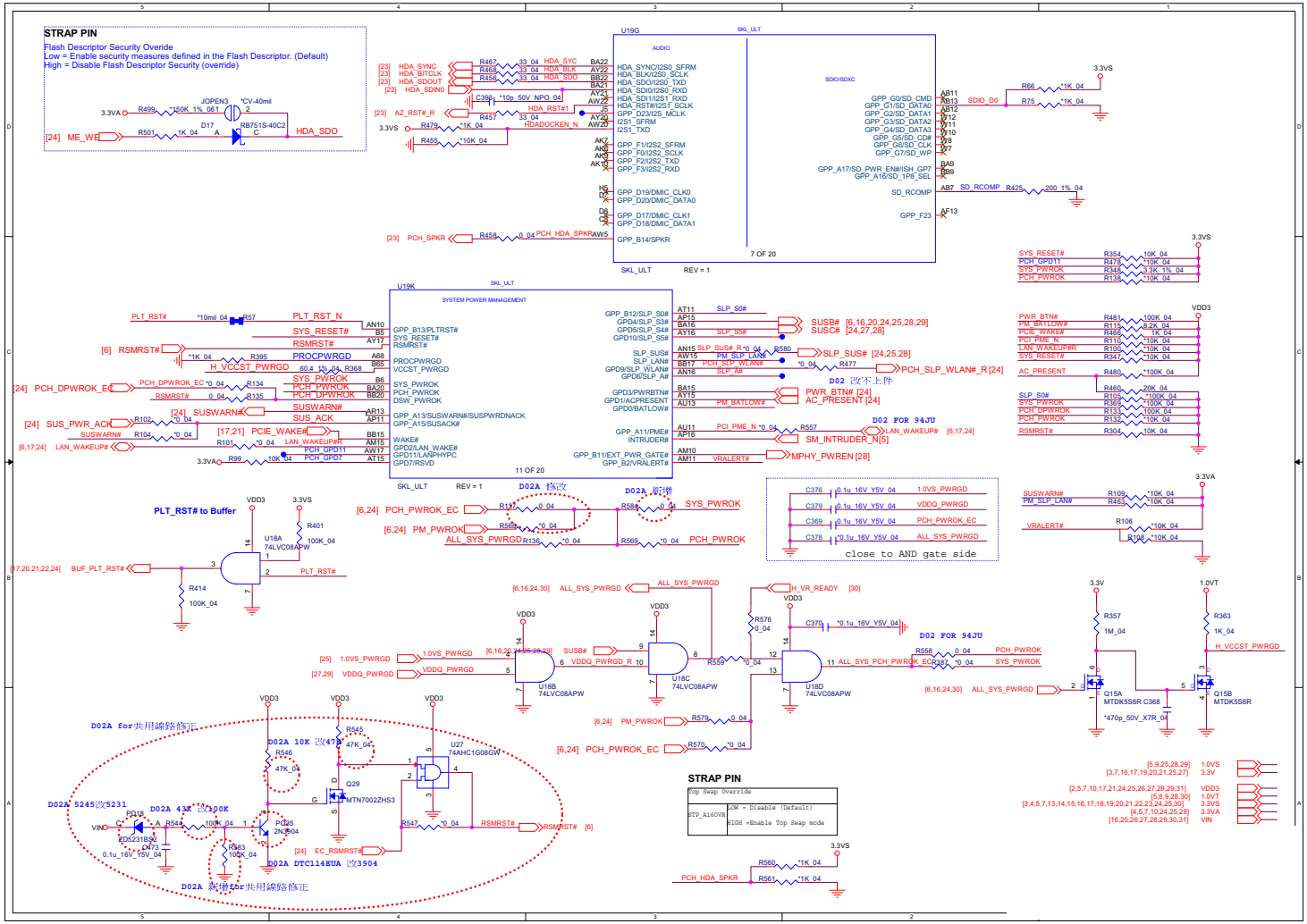

Sheet 6 of 38
Processor 5/11

Processor 6/11

Sheet 7 of 38
Processor 6/11

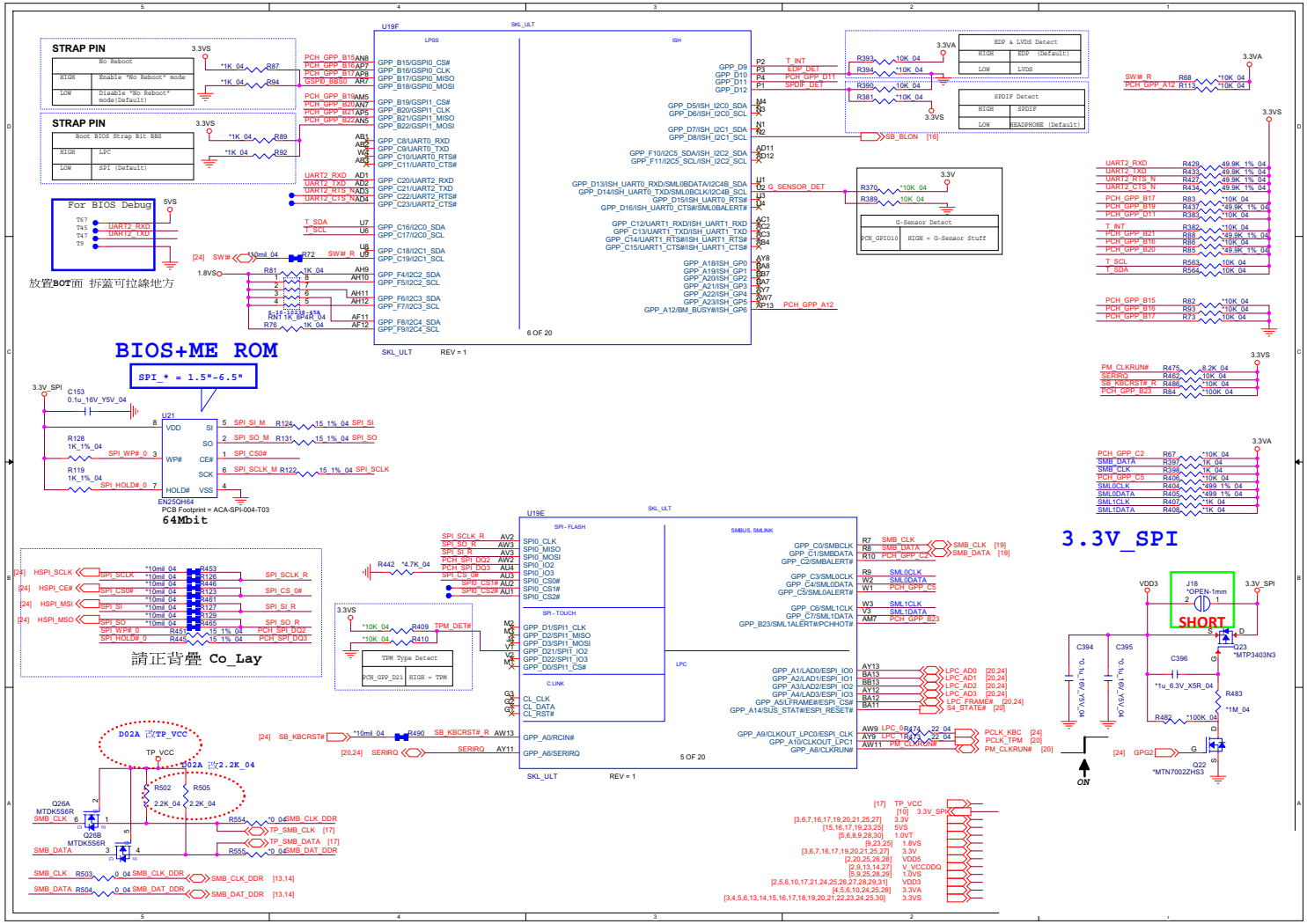

Processor 7/11

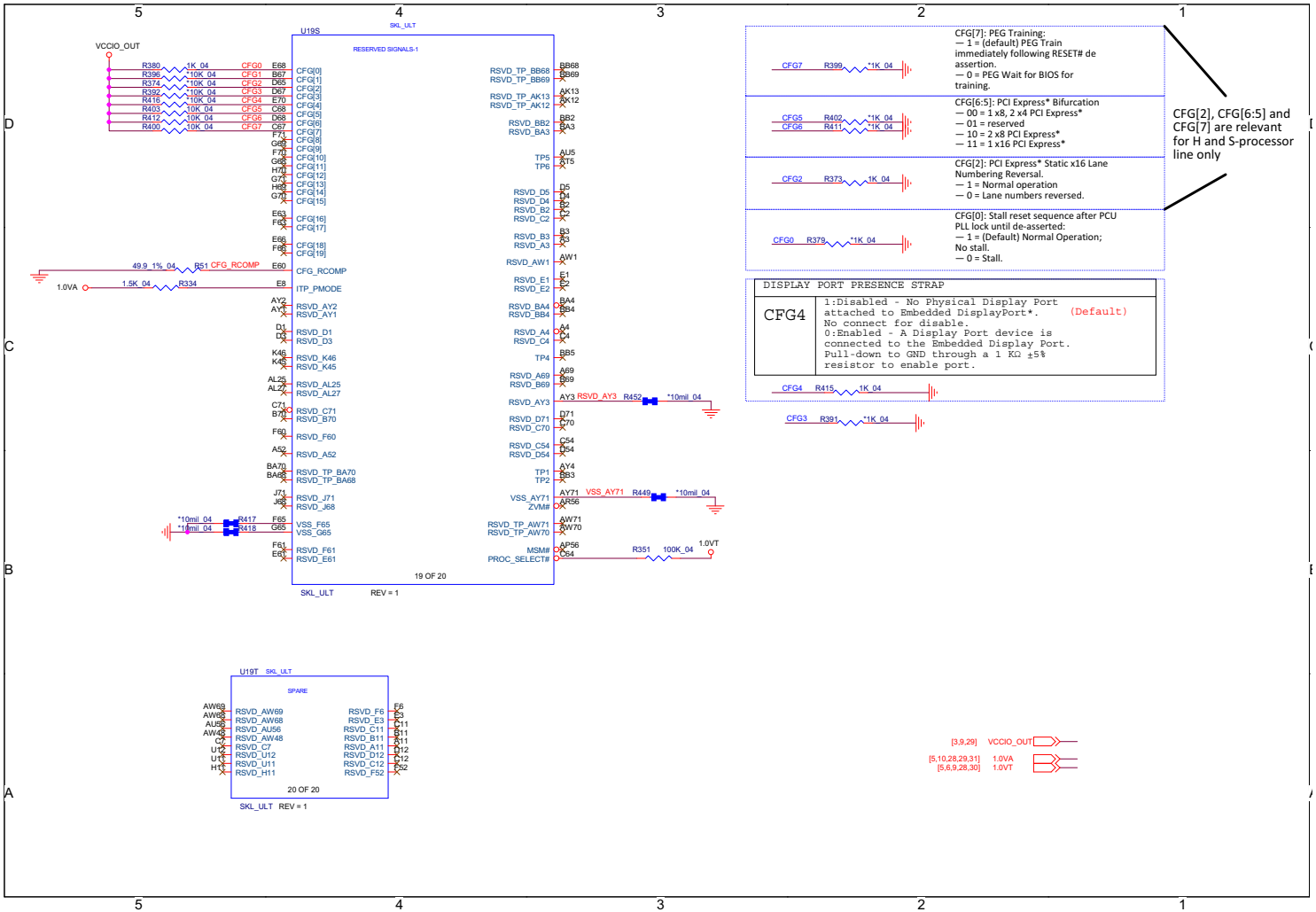

Sheet 8 of 38
Processor 7/11

Processor 8/11

Sheet 9 of 38
Processor 8/11

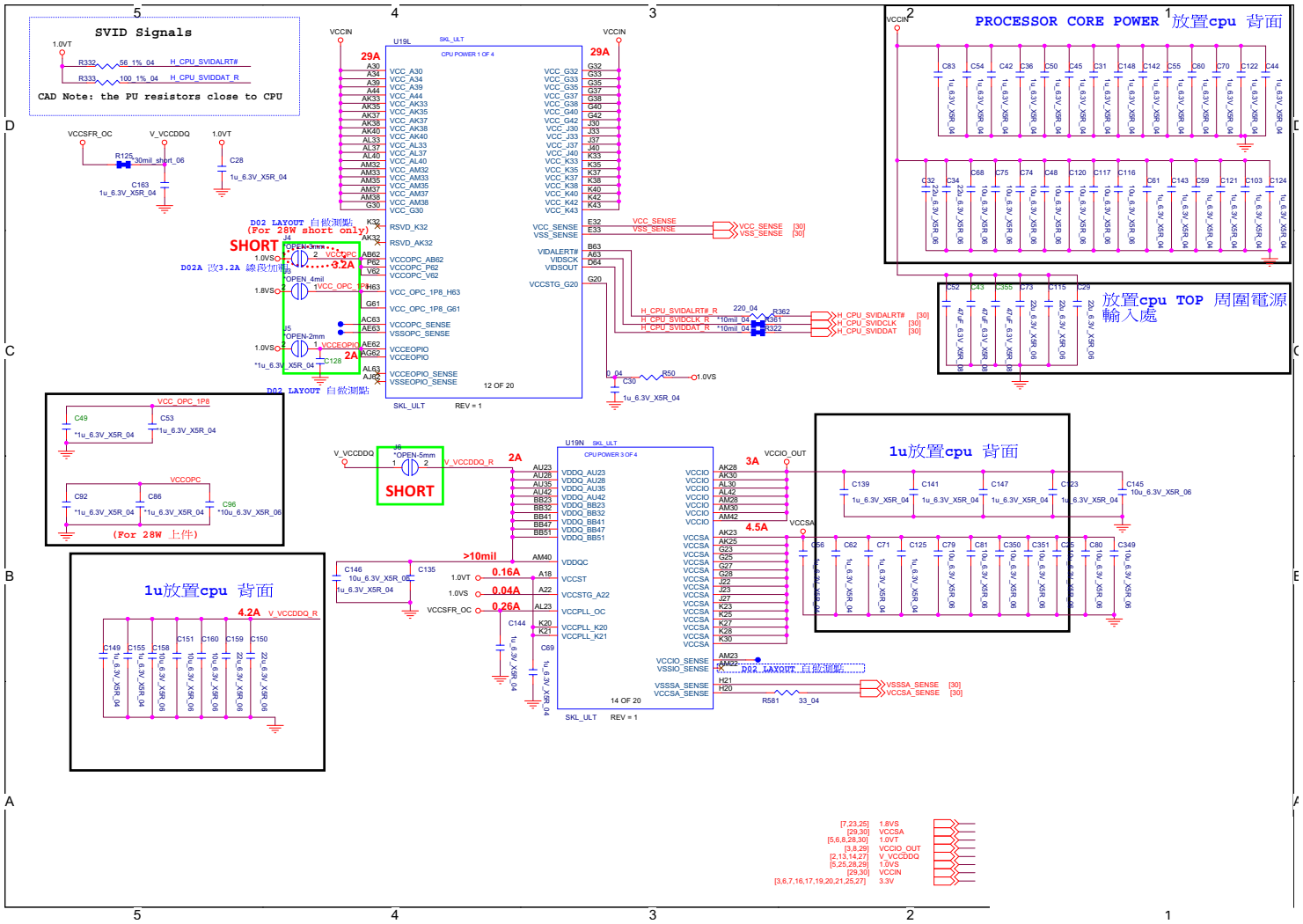

Processor 9/11

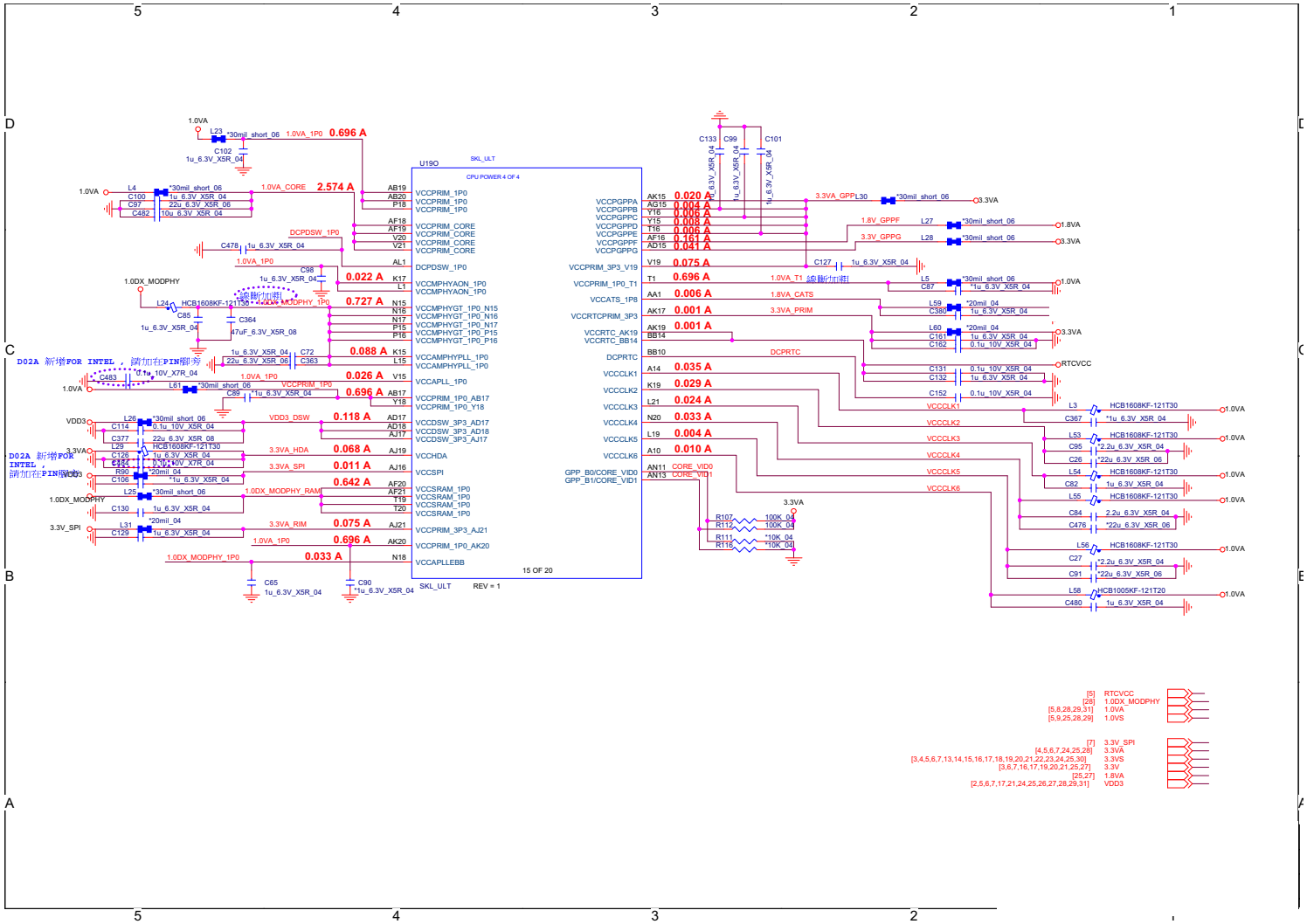

Sheet 10 of 38
Processor 9/11

Processor 10/11

Sheet 11 of 38
Processor 10/11

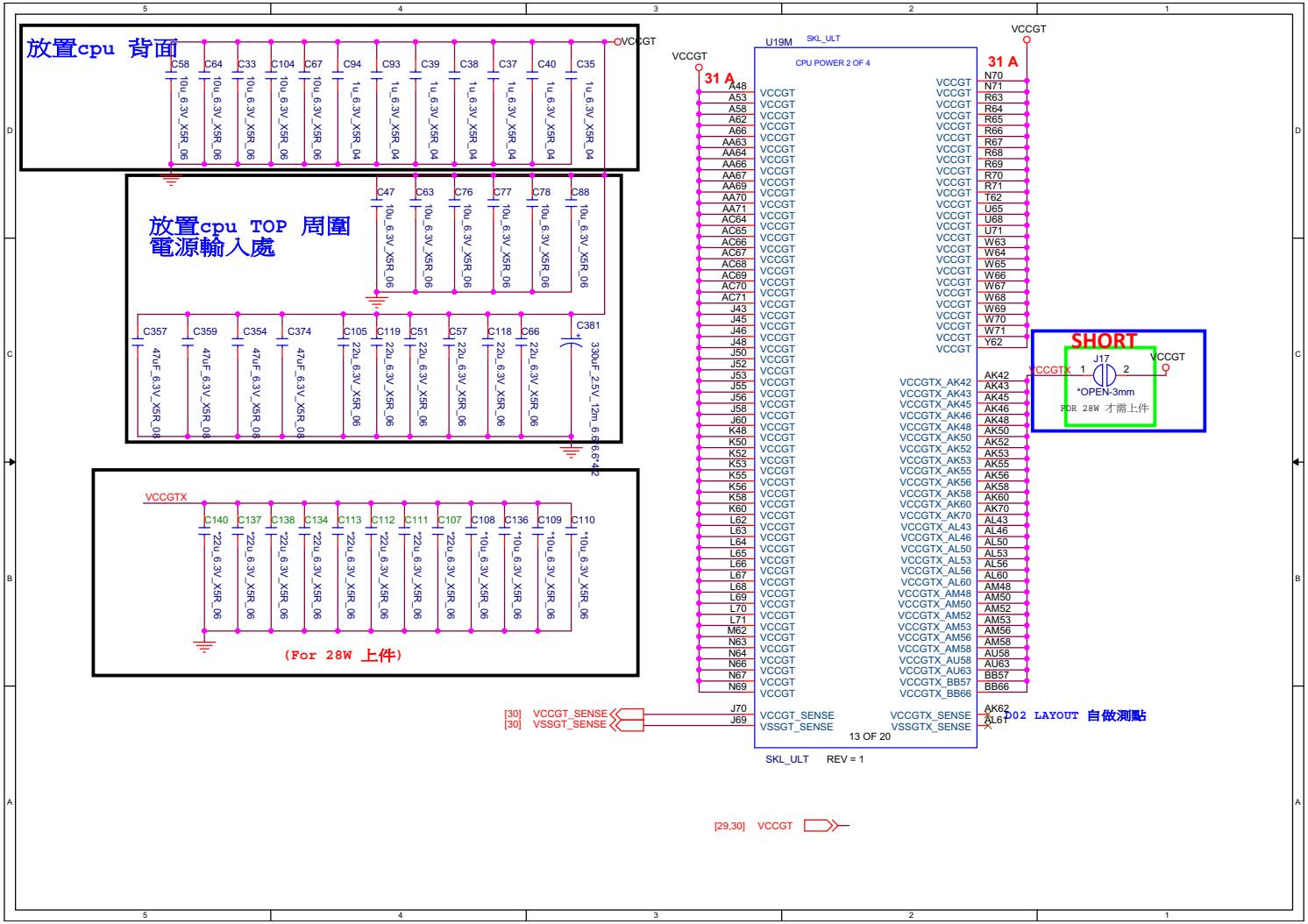

Processor 11/11

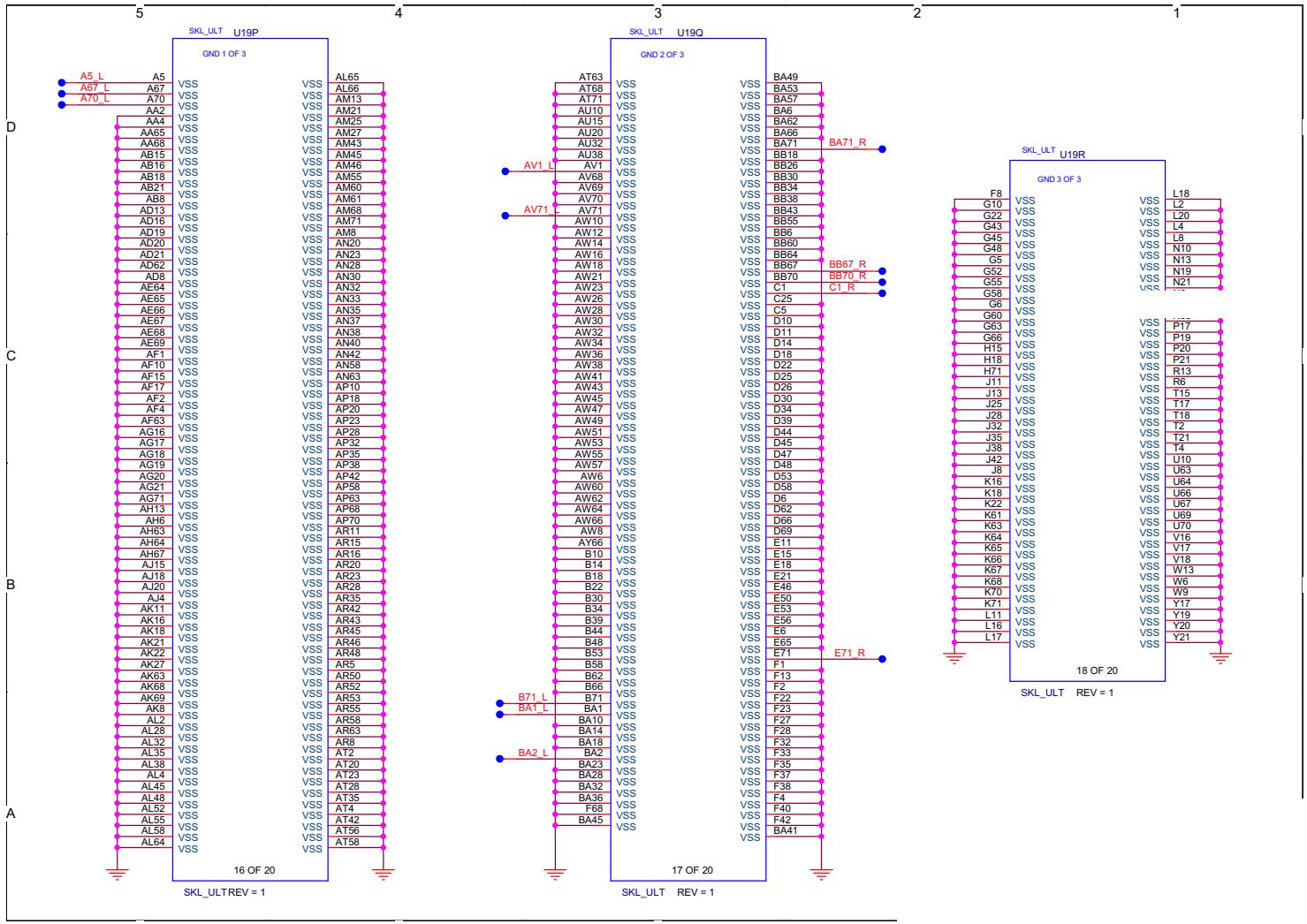

Sheet 12 of 38
Processor 11/11

DDR3 SO-DIMM_0

Sheet 13 of 38
DDR3 SO-DIMM_0

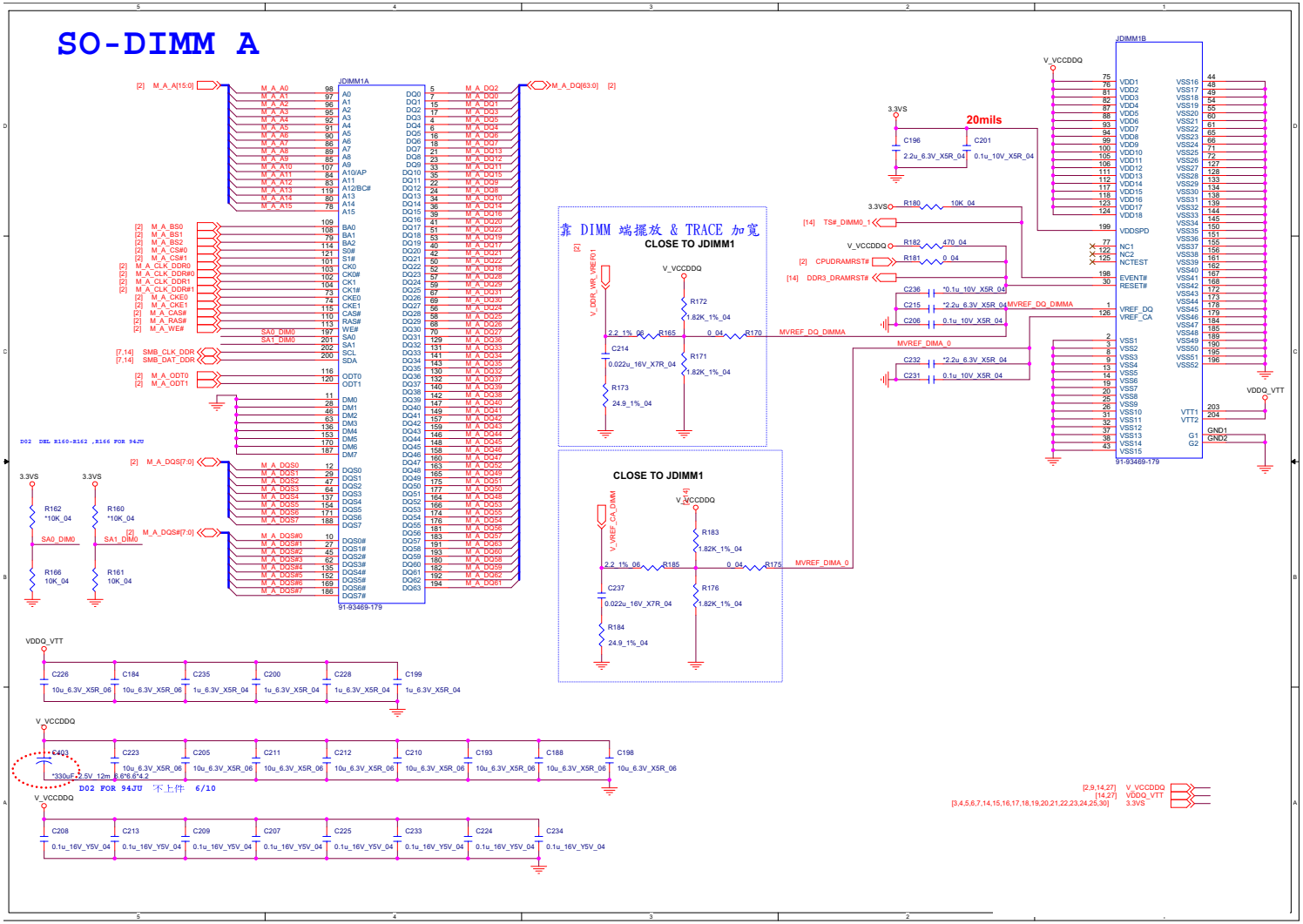

DDR3 SO-DIMM_1

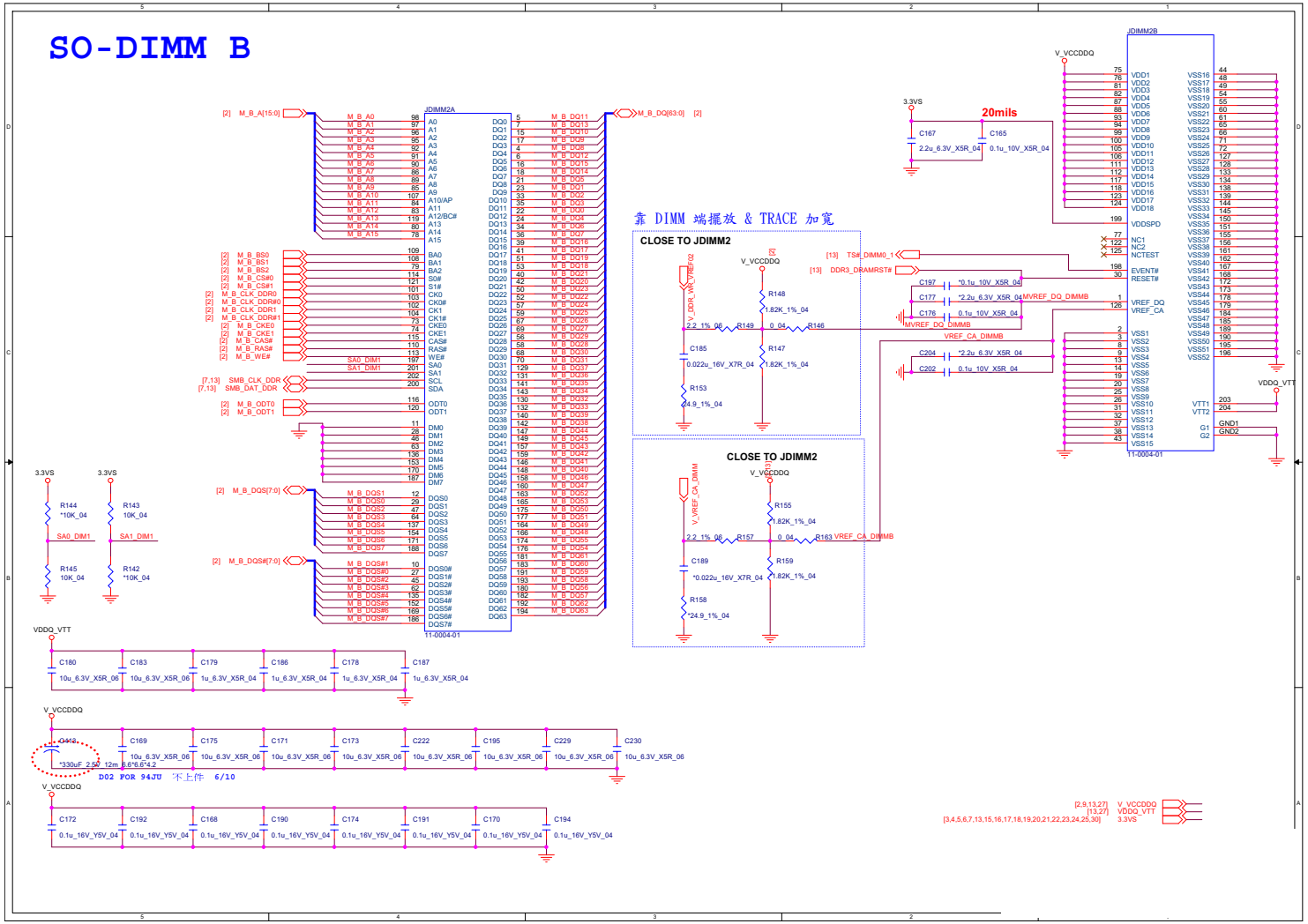

Sheet 14 of 38
DDR3 SO-DIMM_1

HDMI

Sheet 15 of 38
HDMI

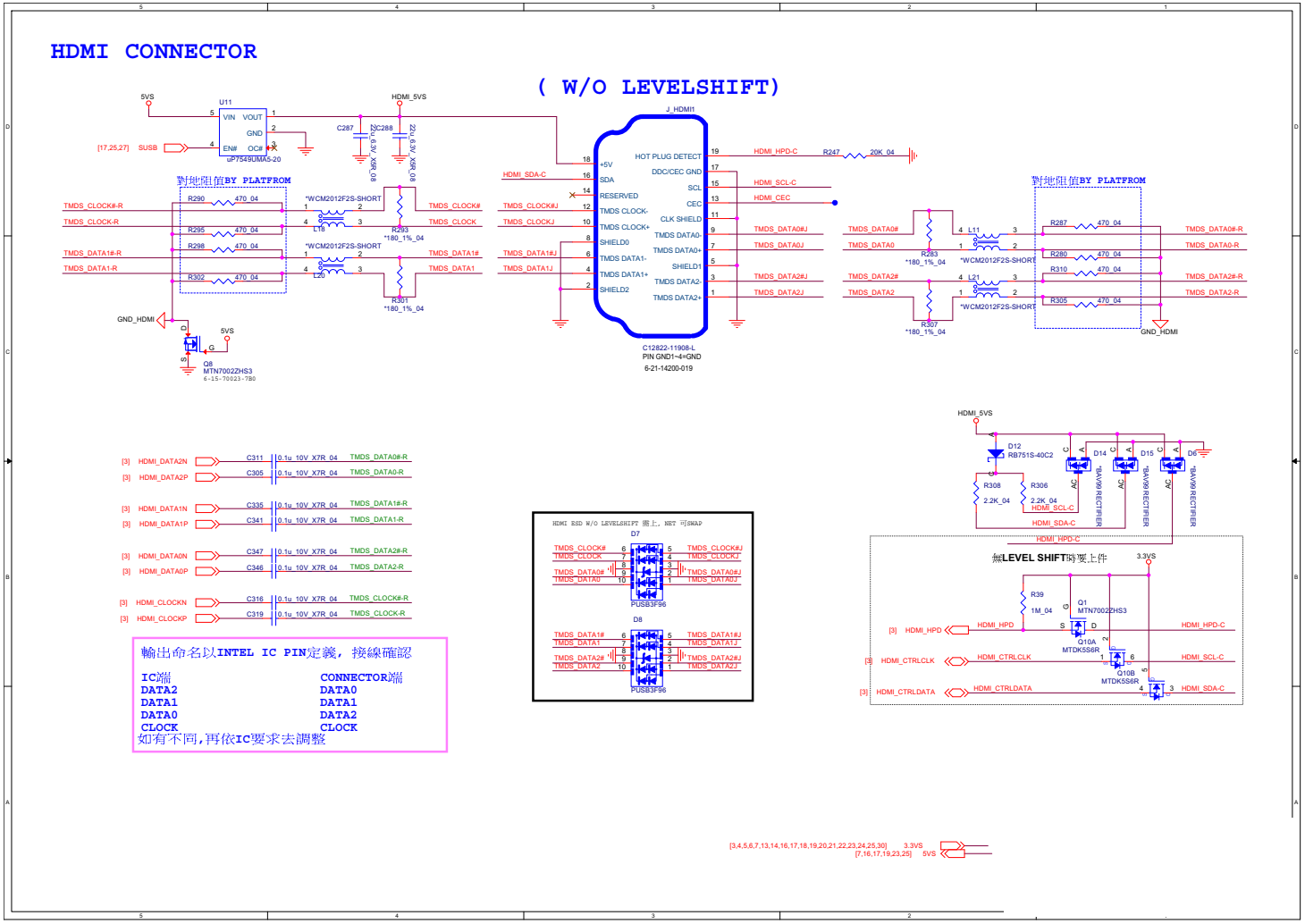

Panel

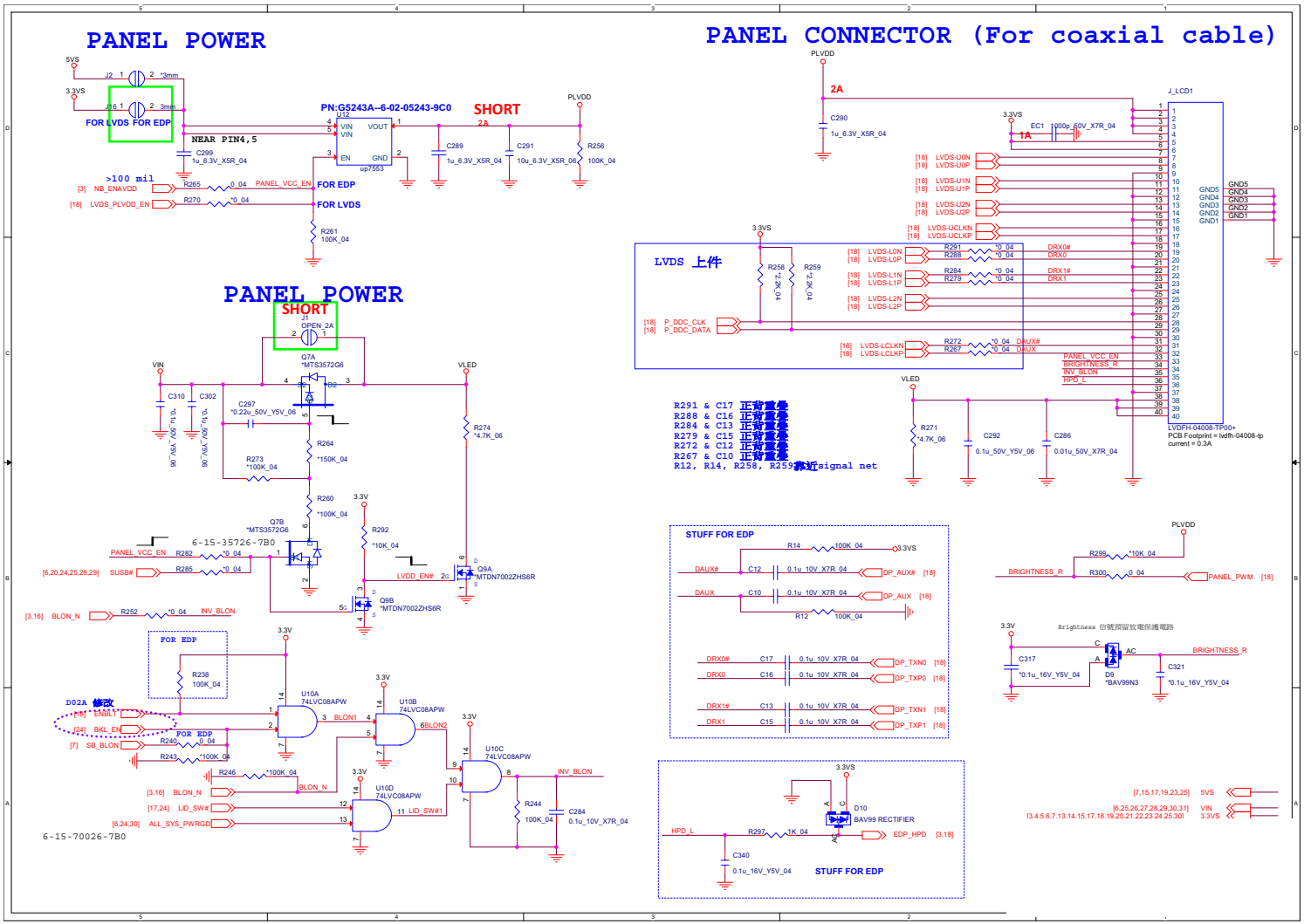

Sheet 16 of 38
Panel

Conn, CCD, Fan, T/P, TV

Sheet 17 of 38
Conn, CCD, Fan, T/P, TV

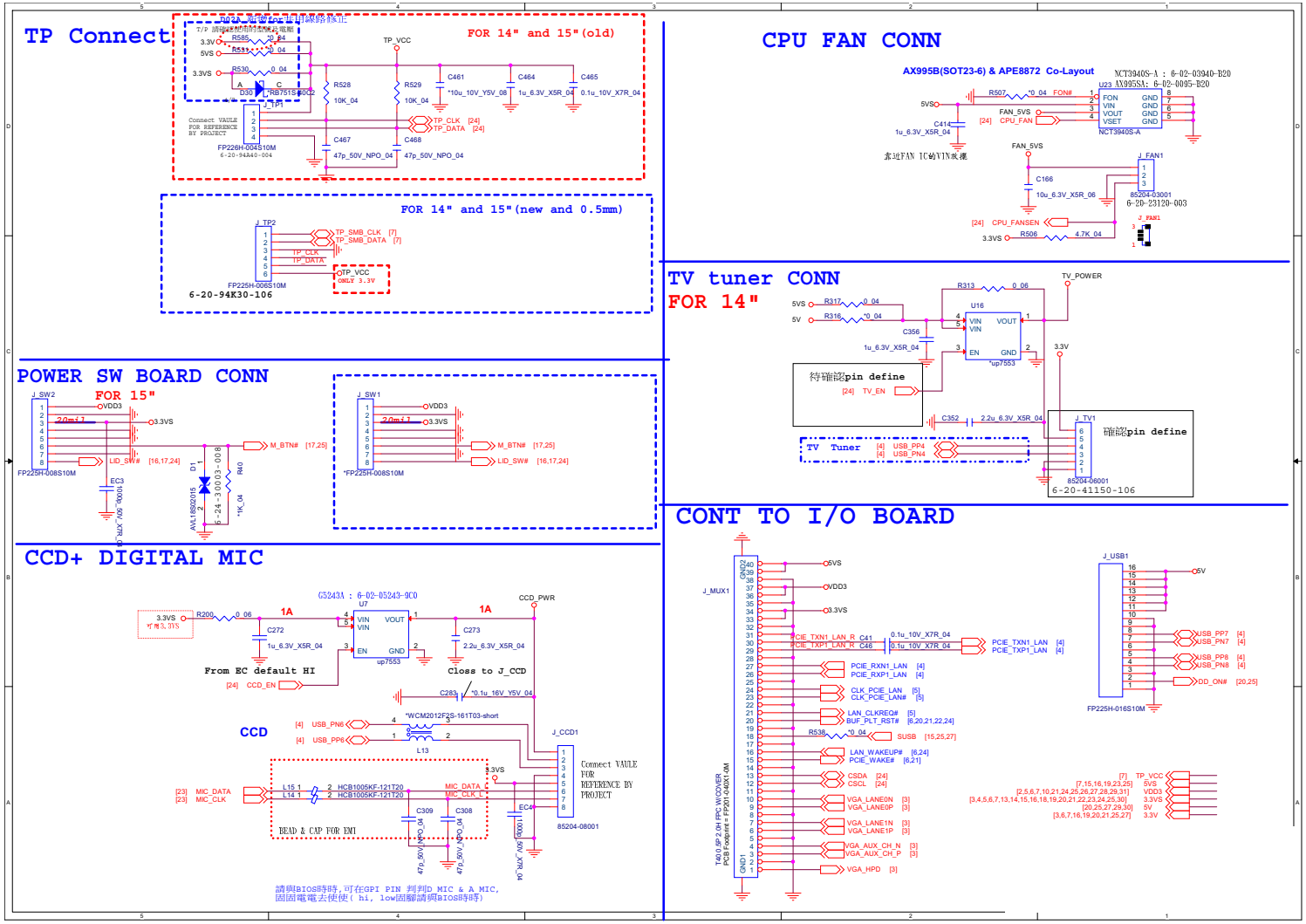

PS8625

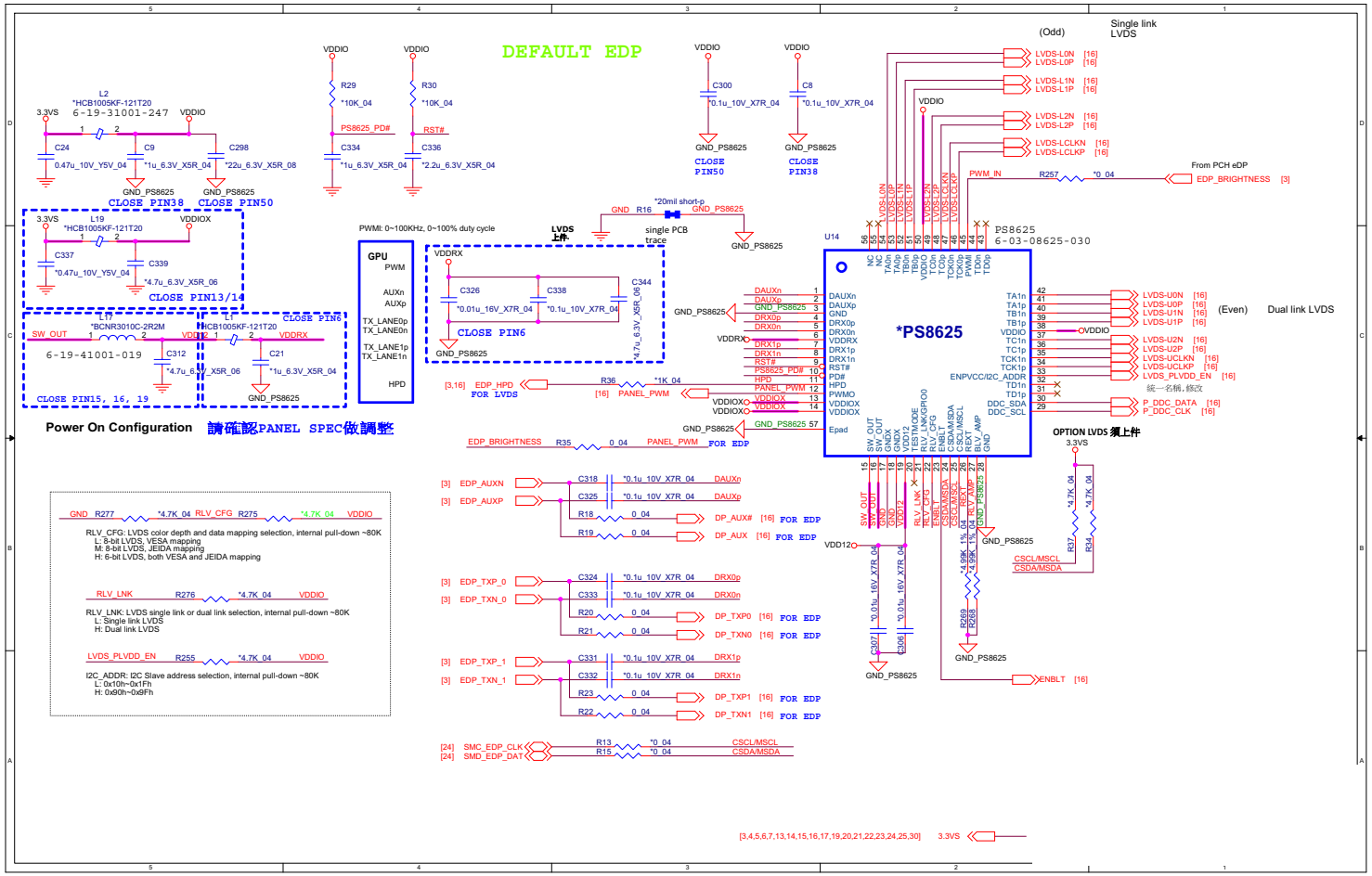

Sheet 18 of 38
PS8625

SATA, LED, KB, G-Sensor

Sheet 19 of 38
SATA, LED, KB, G-Sensor

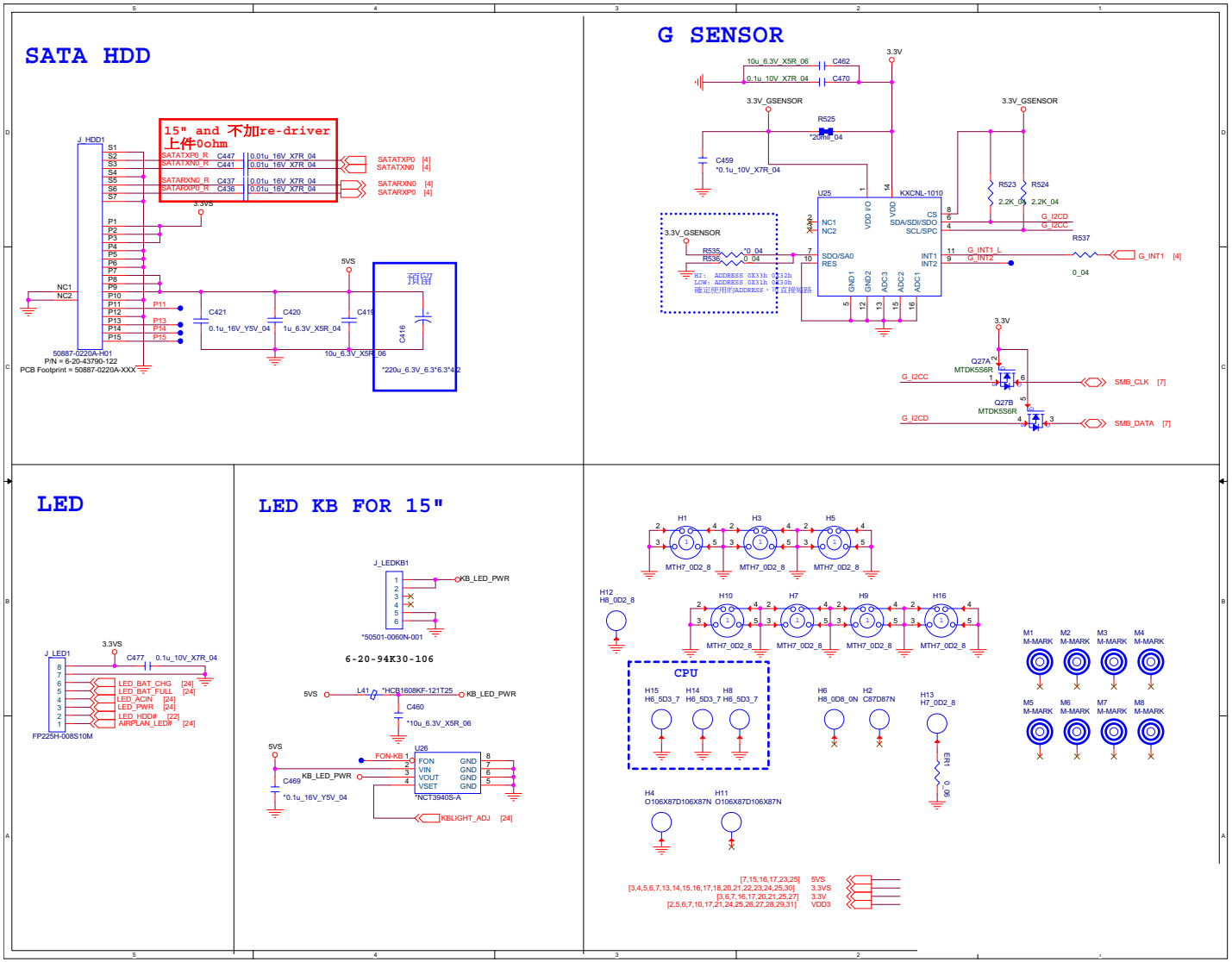

USB, TPM

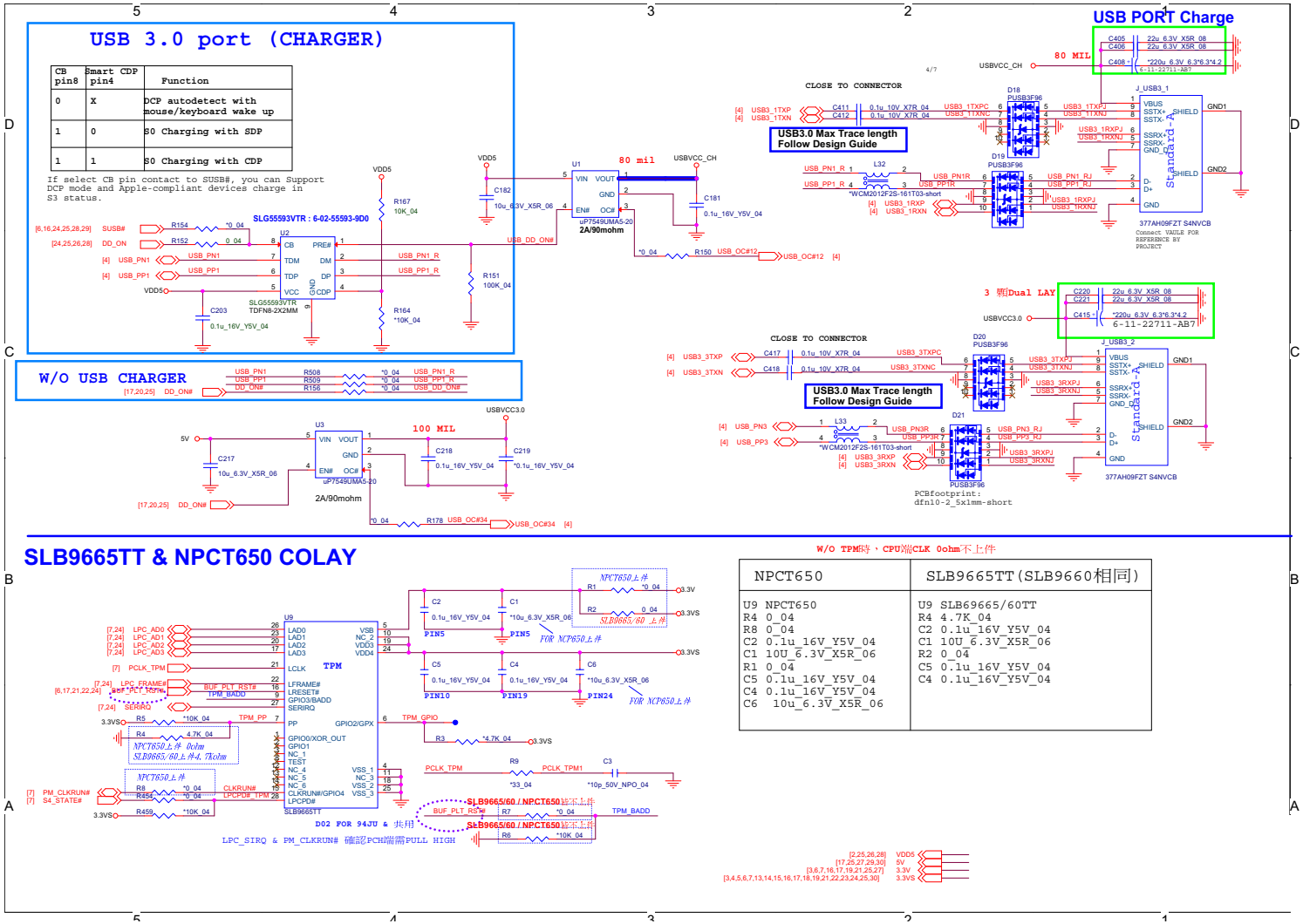

Sheet 20 of 38
USB, TPM

WLAN/BT, 3G/mSATA

Sheet 21 of 38
WLAN/BT, 3G/mSATA

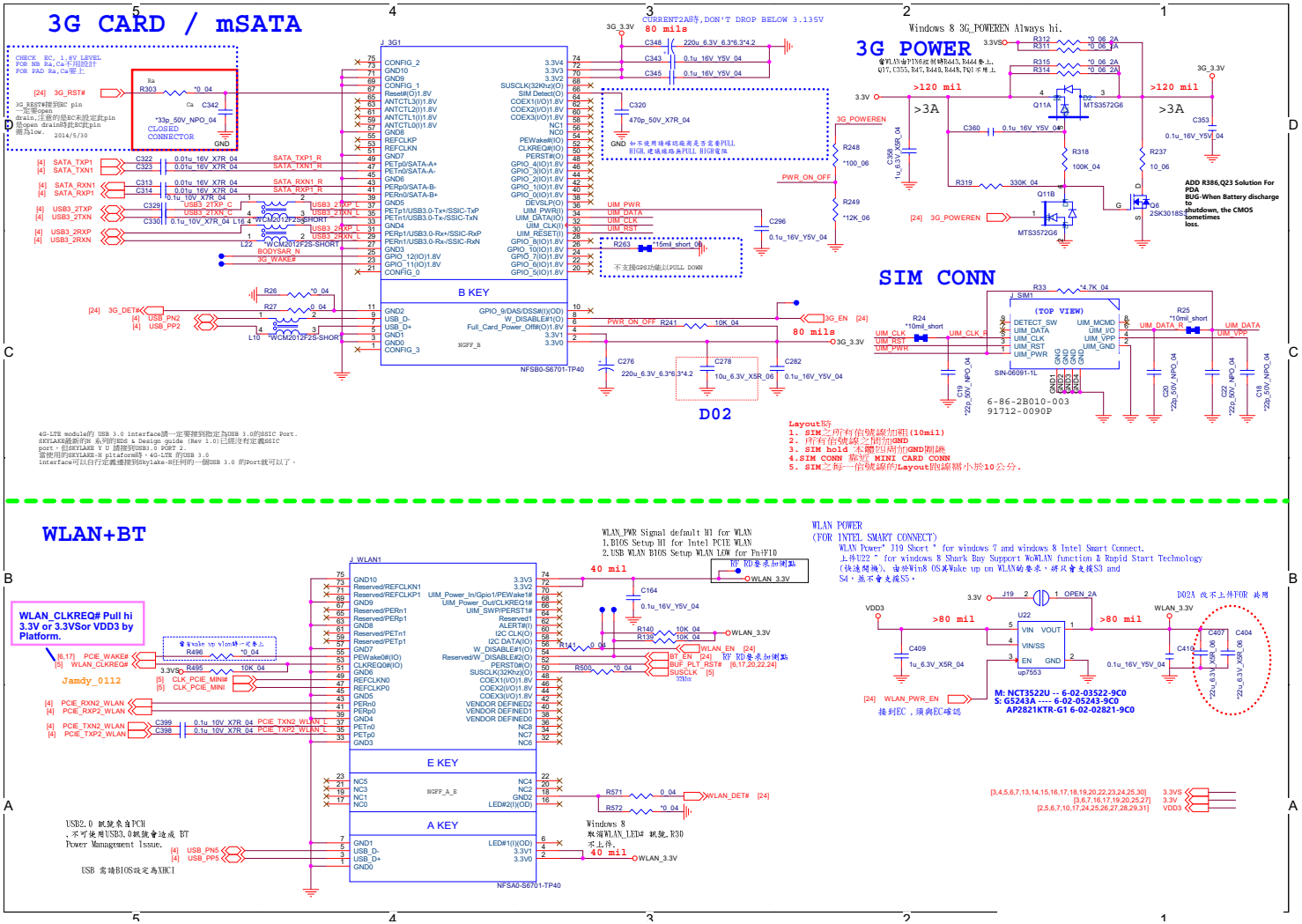

NGFF_M SSD

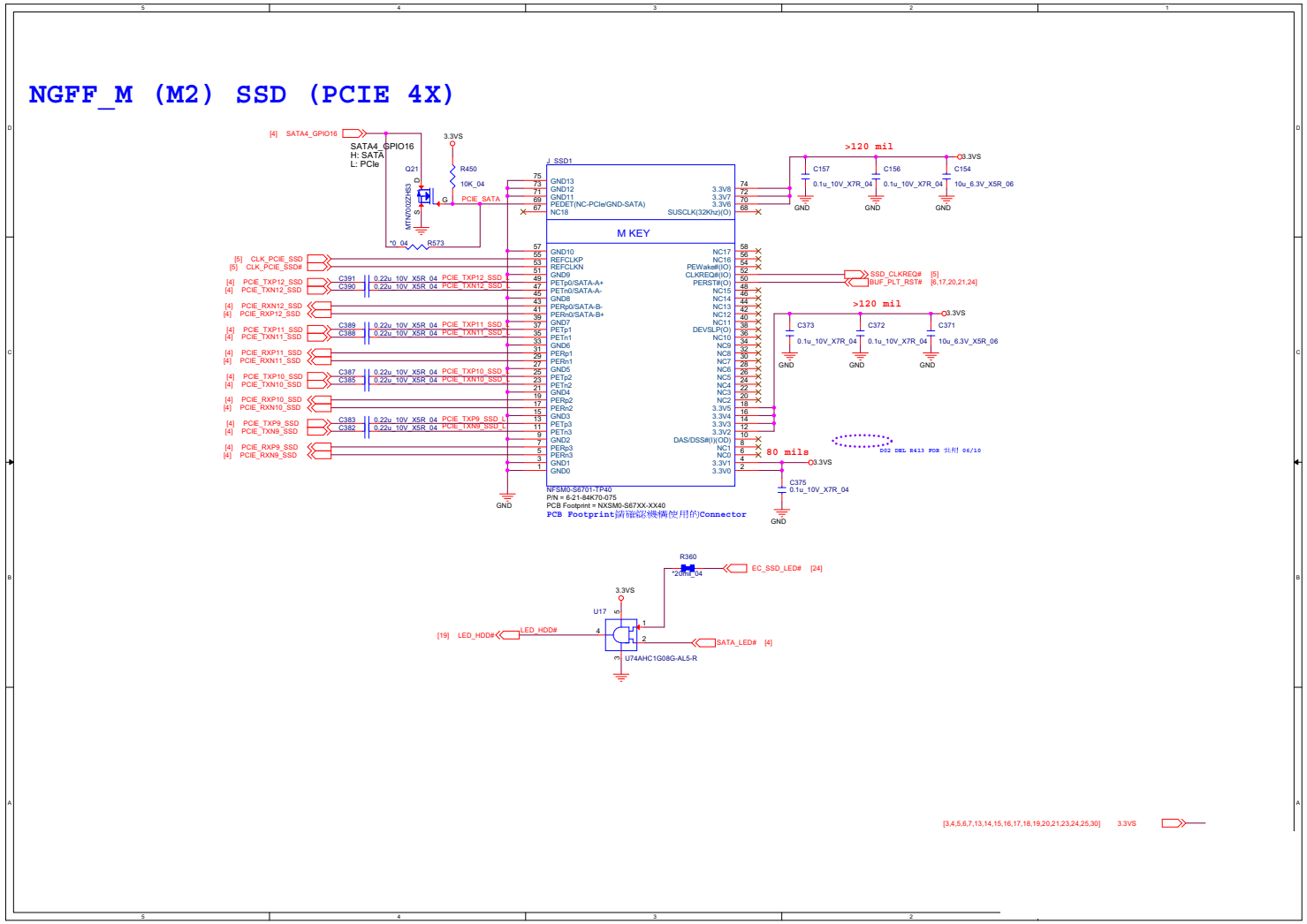

Sheet 22 of 38
NGFF_M SSD

Audio Codec

Sheet 23 of 38
Audio Codec

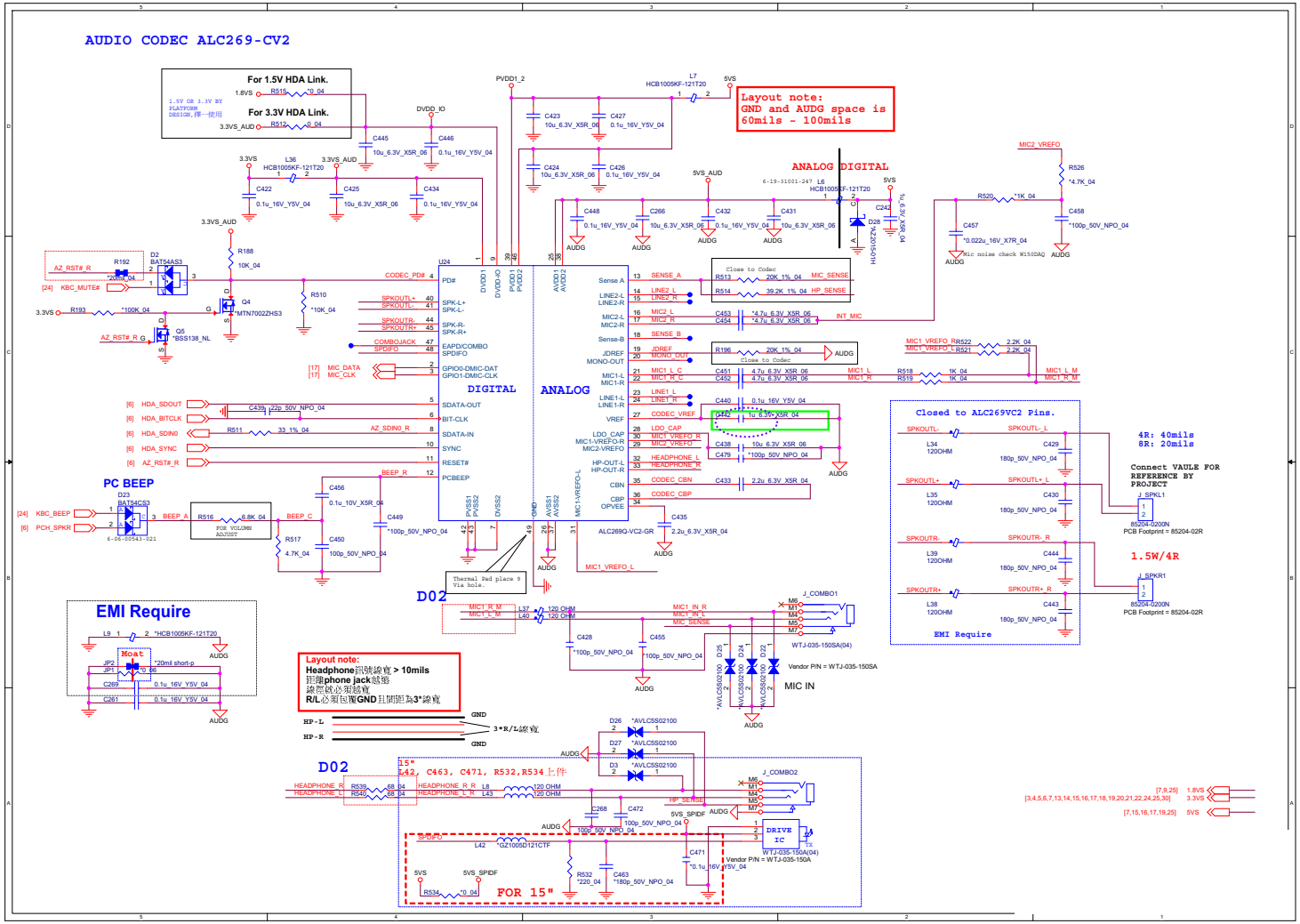

KBC ITE IT8587

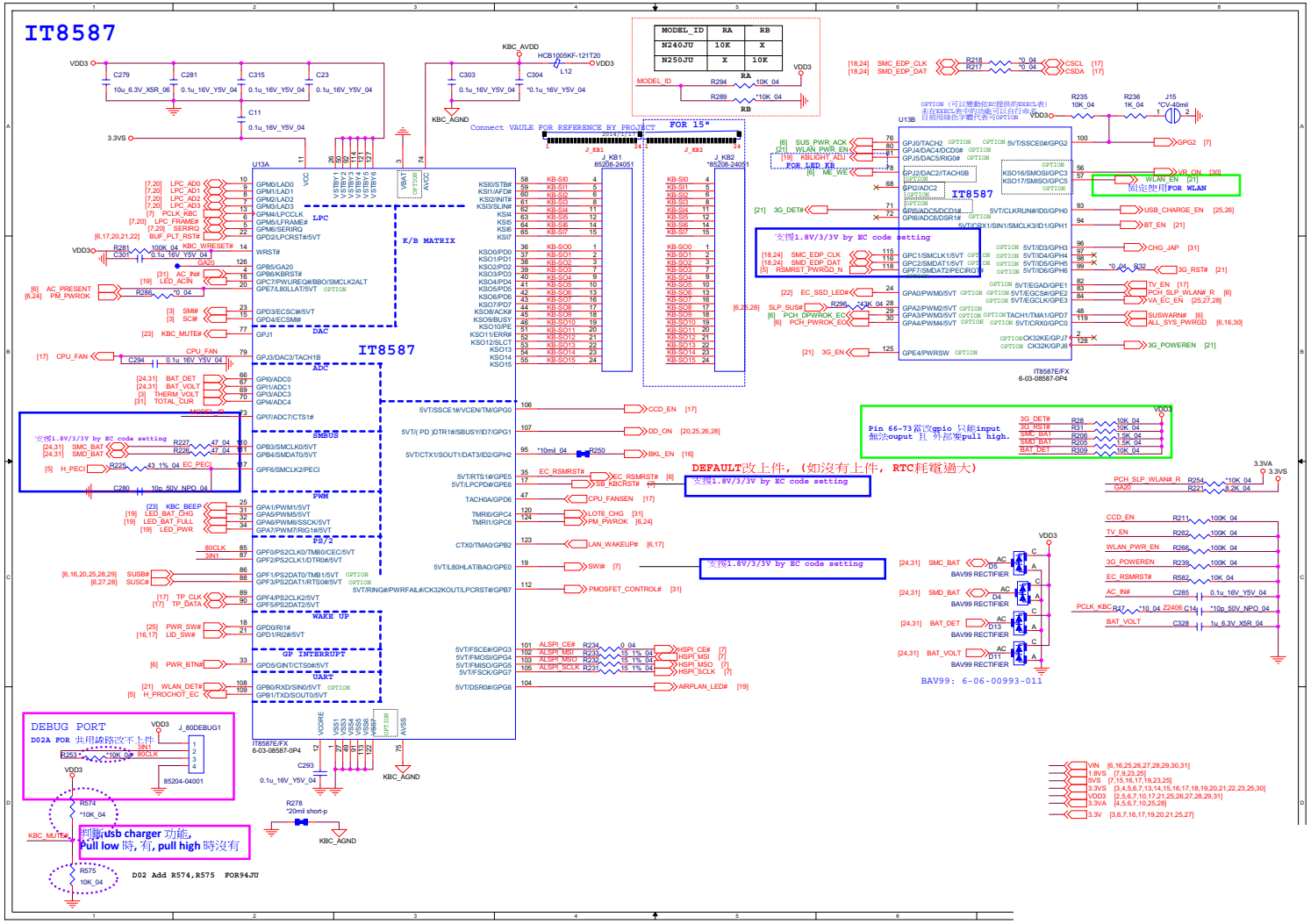

Sheet 24 of 38
KBC ITE IT8587

3V, 5V, 3VS, 5VS, CTL Signal

Sheet 25 of 38
3V, 5V, 3VS, 5VS, CTL Signal

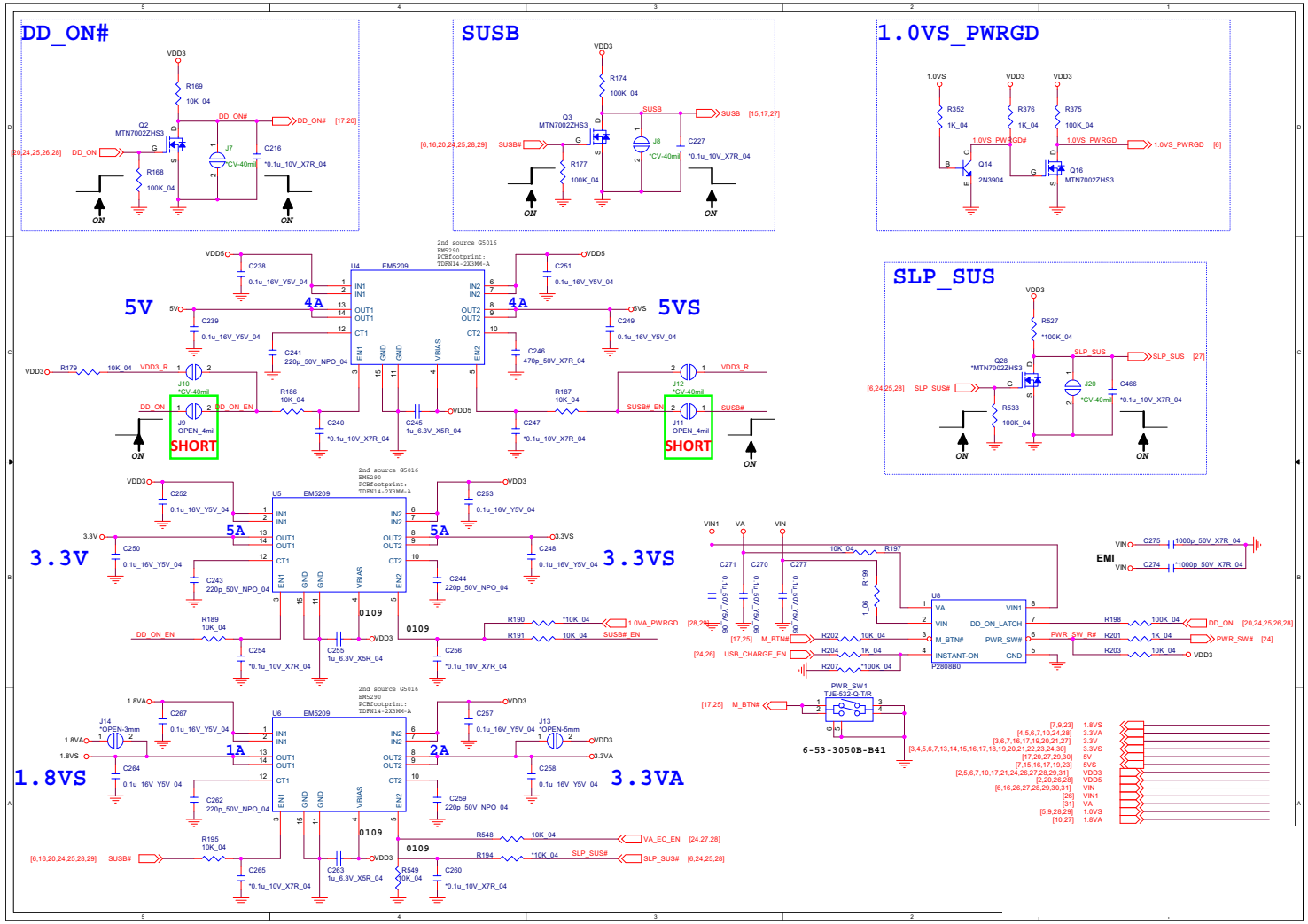

VDD3, VDD5

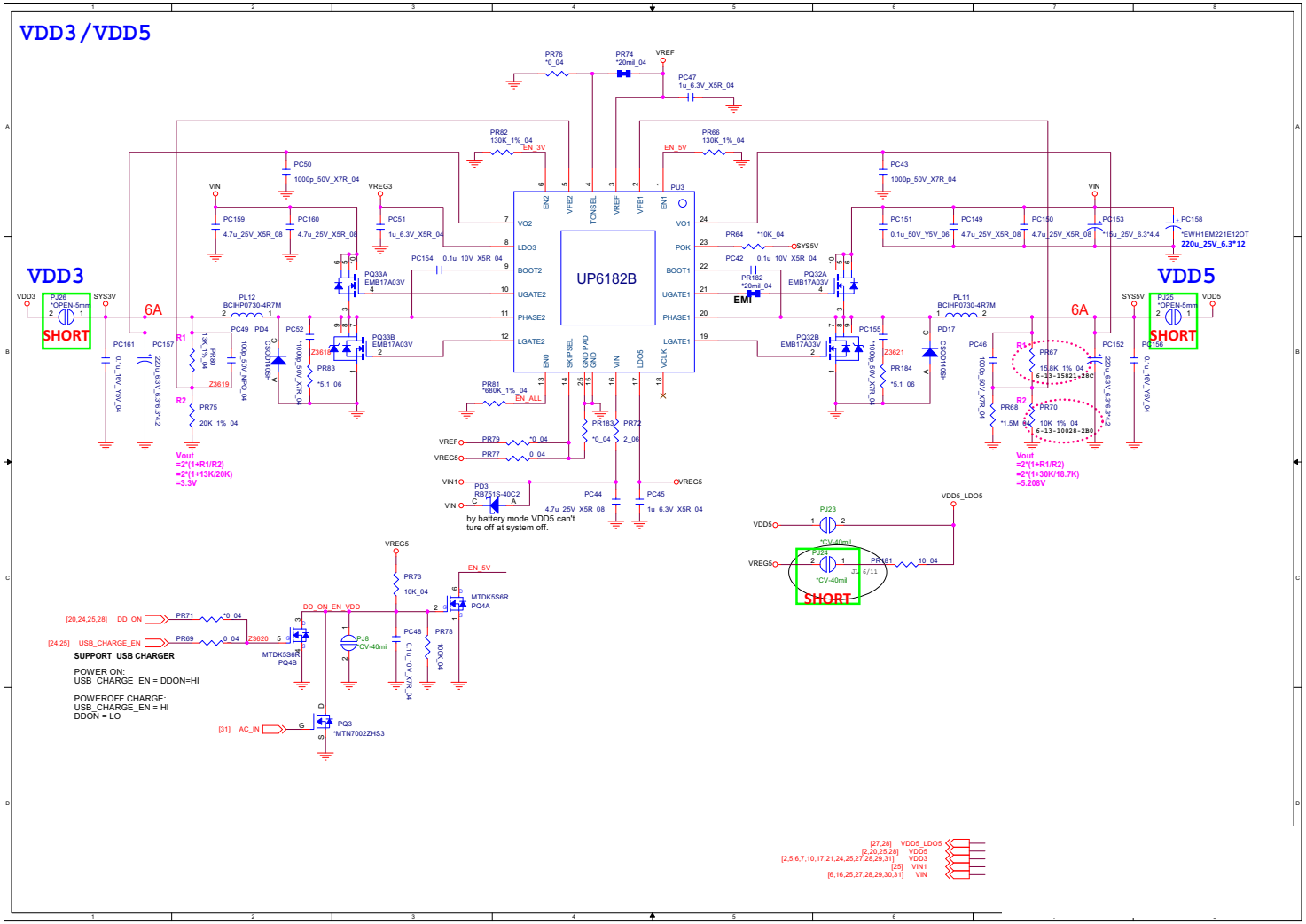

Sheet 26 of 38
VDD3, VDD5

VDDQ_VTT, 1.5VS, 1.8VS

Sheet 27 of 38
VDDQ_VTT, 1.5VS, 1.8VS

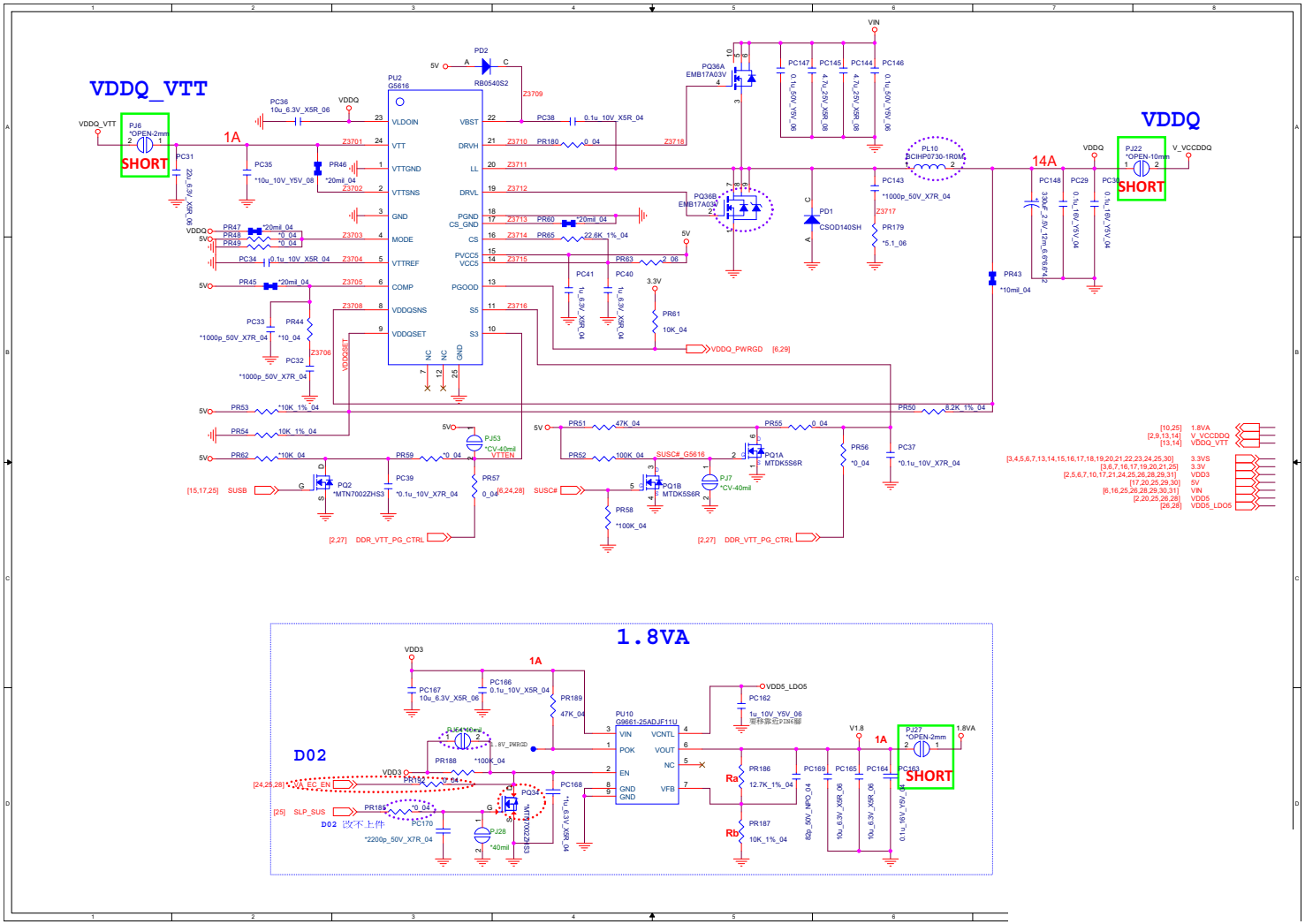

1.0V Series

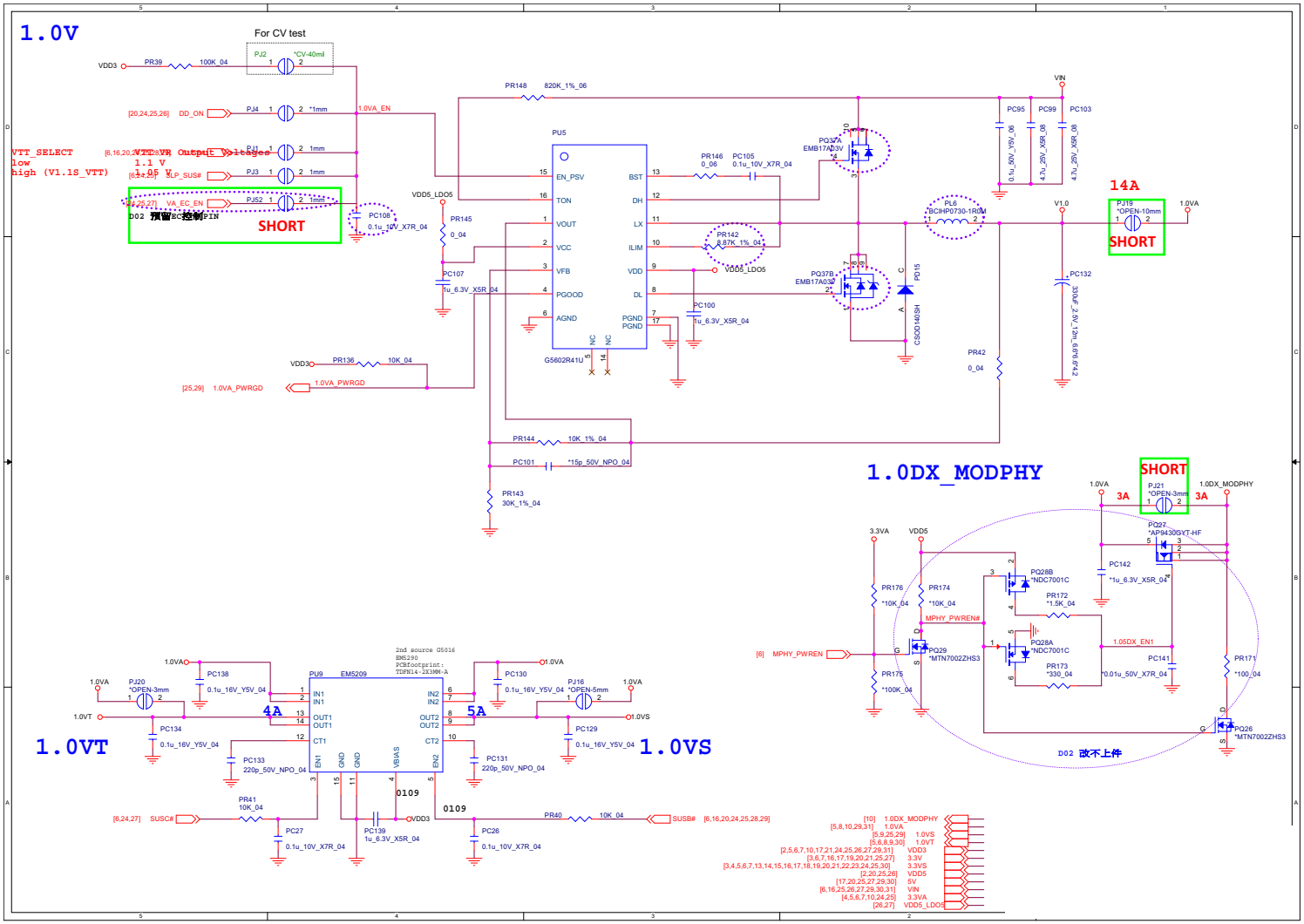

Sheet 28 of 38
1.0V Series

VCore, VCCGT, VCCSA, VCCIO

Sheet 29 of 38
VCore, VCCGT, VCCSA, VCCIO

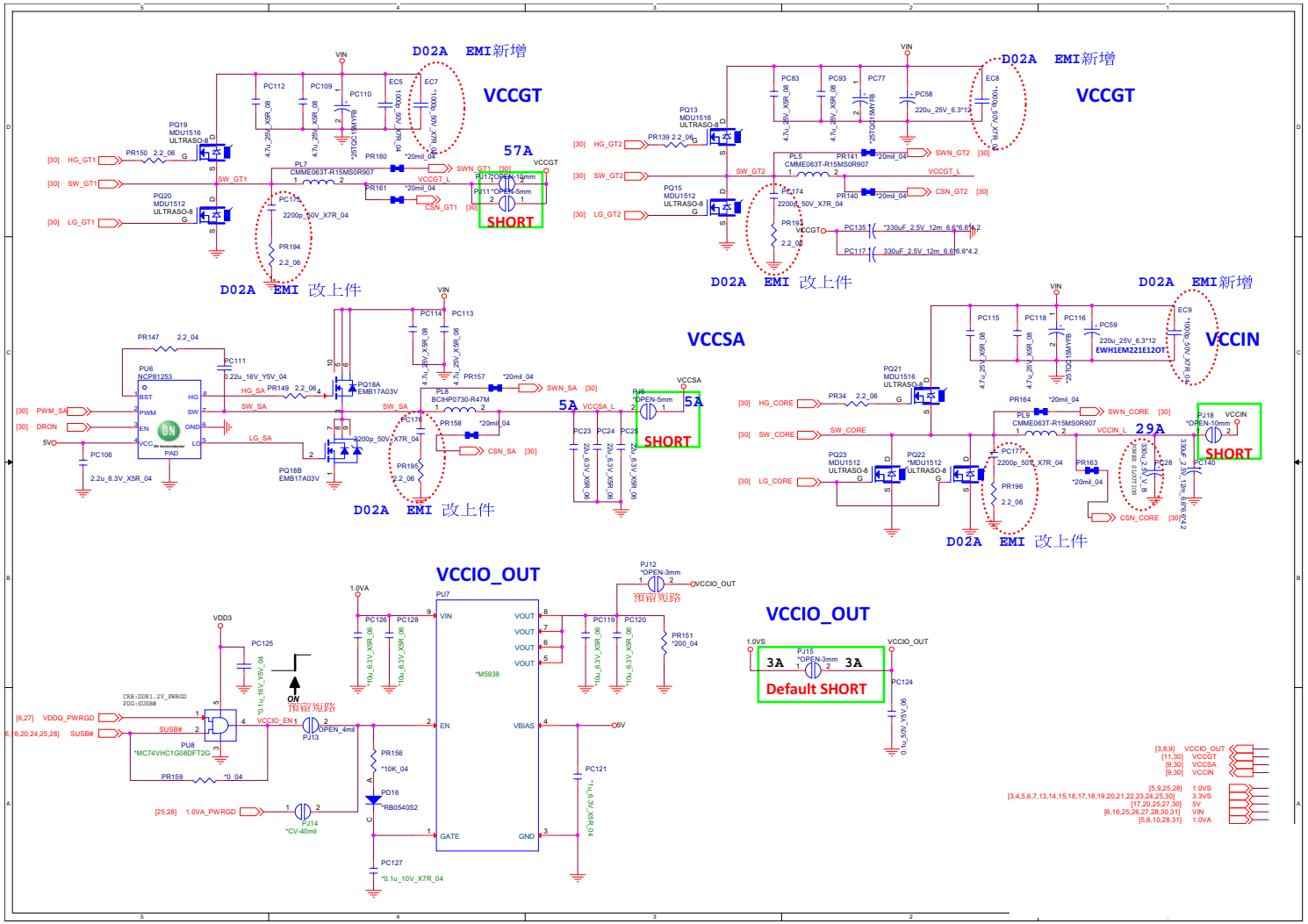

NCP81206 Regulator

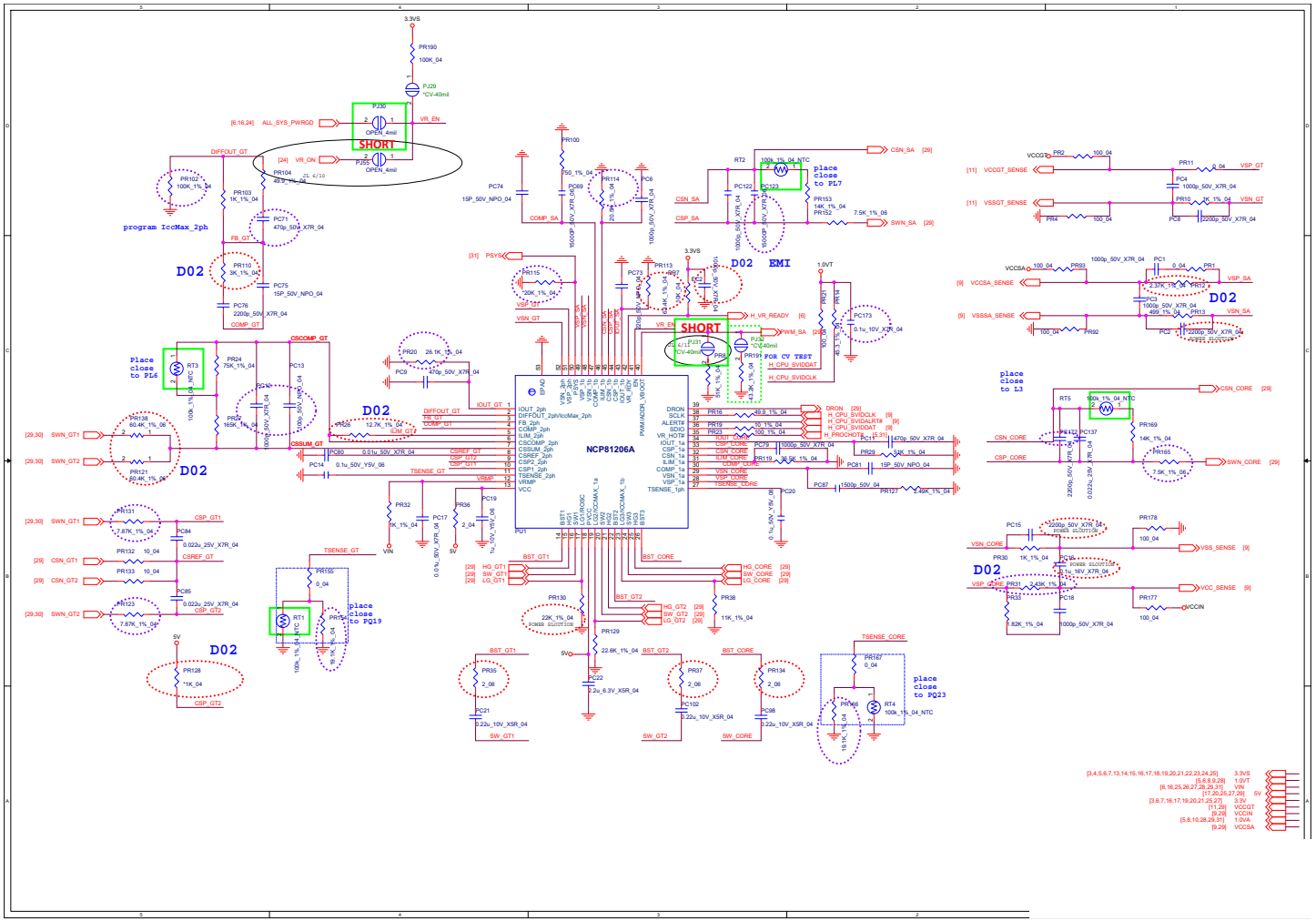

Sheet 30 of 38
NCP81206
Regulator

Charger, DC-In

Sheet 31 of 38
Charger, DC-In

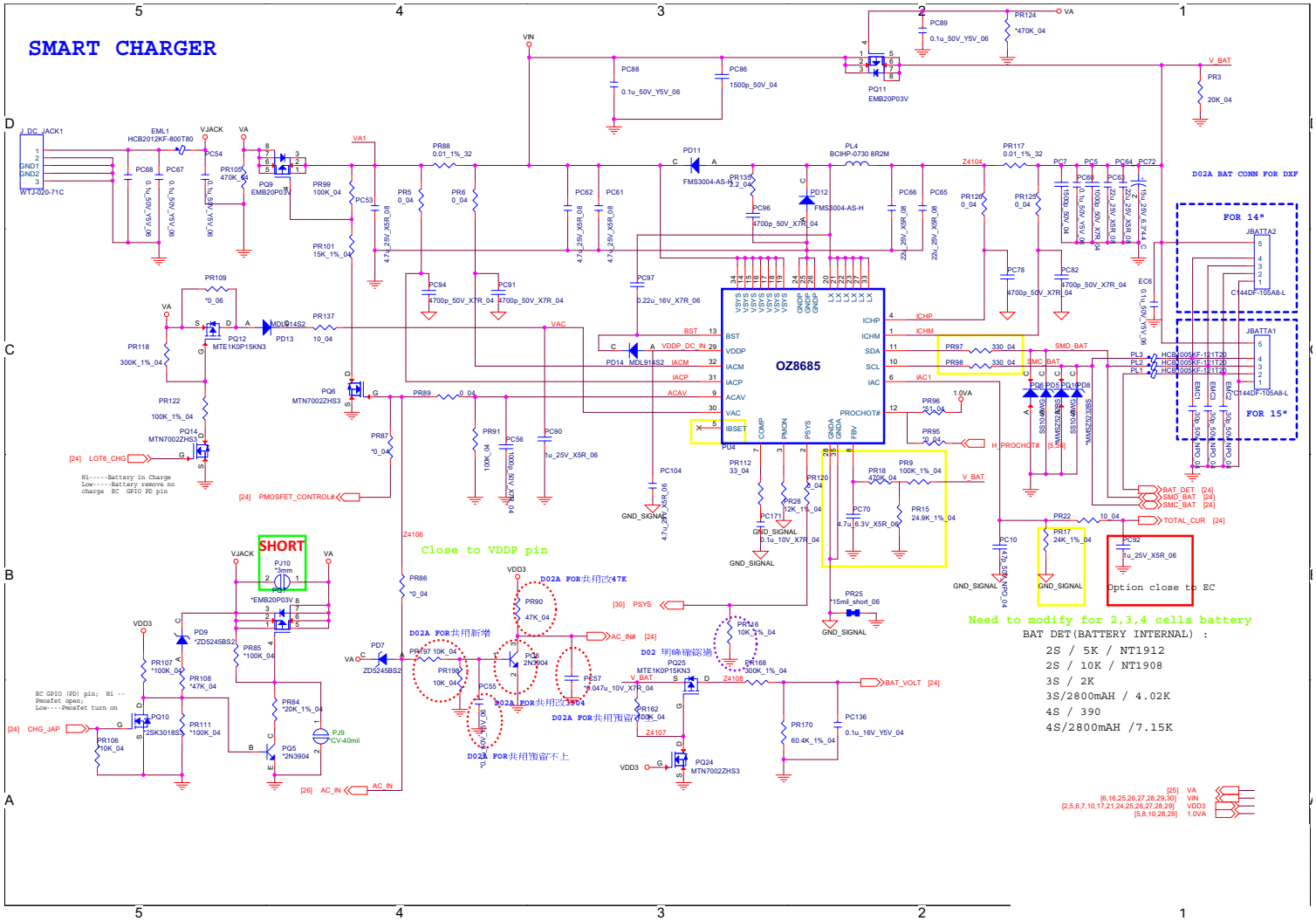

USB Board

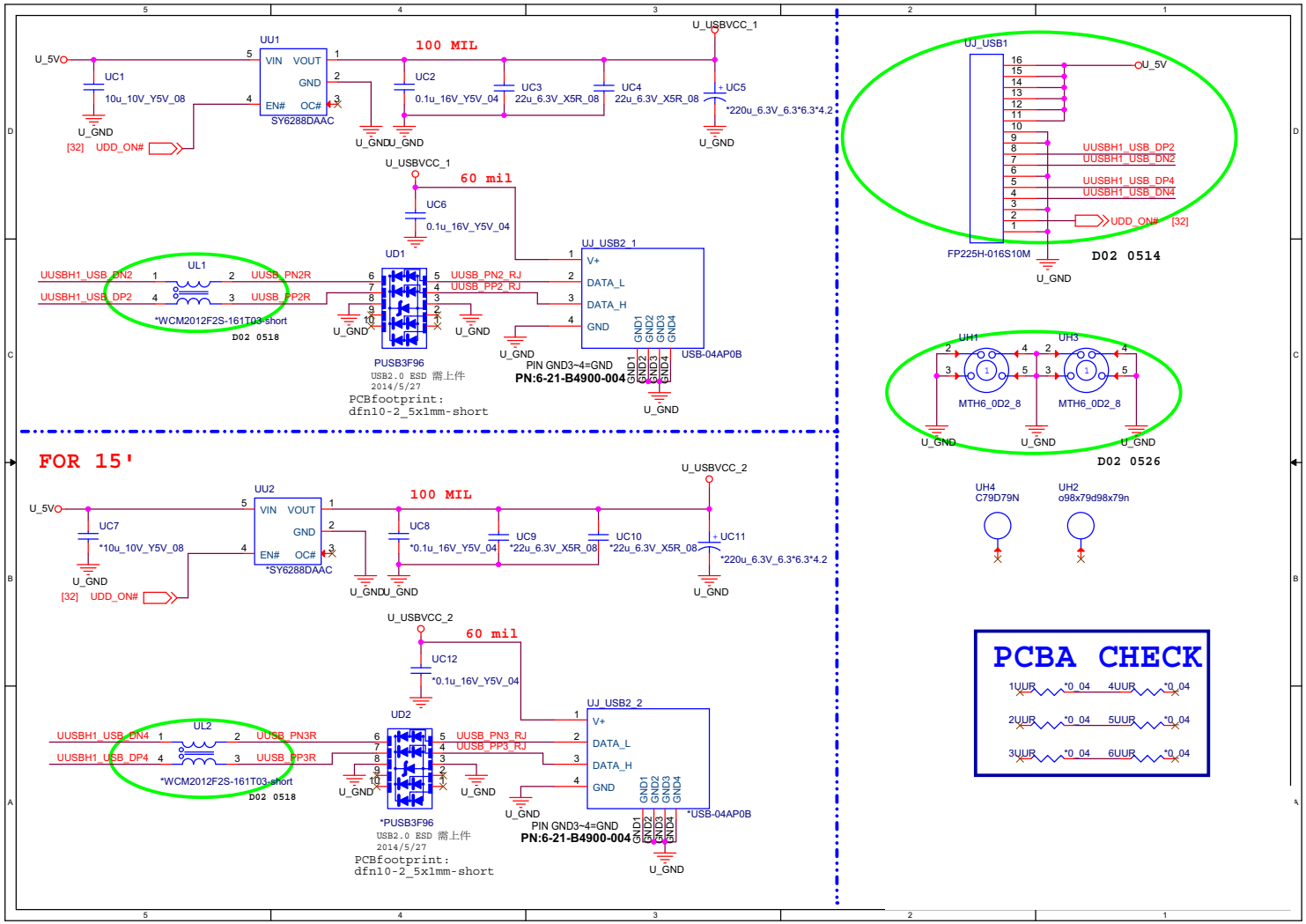

Sheet 32 of 38
USB Board

CRT

Sheet 33 of 38
CRT

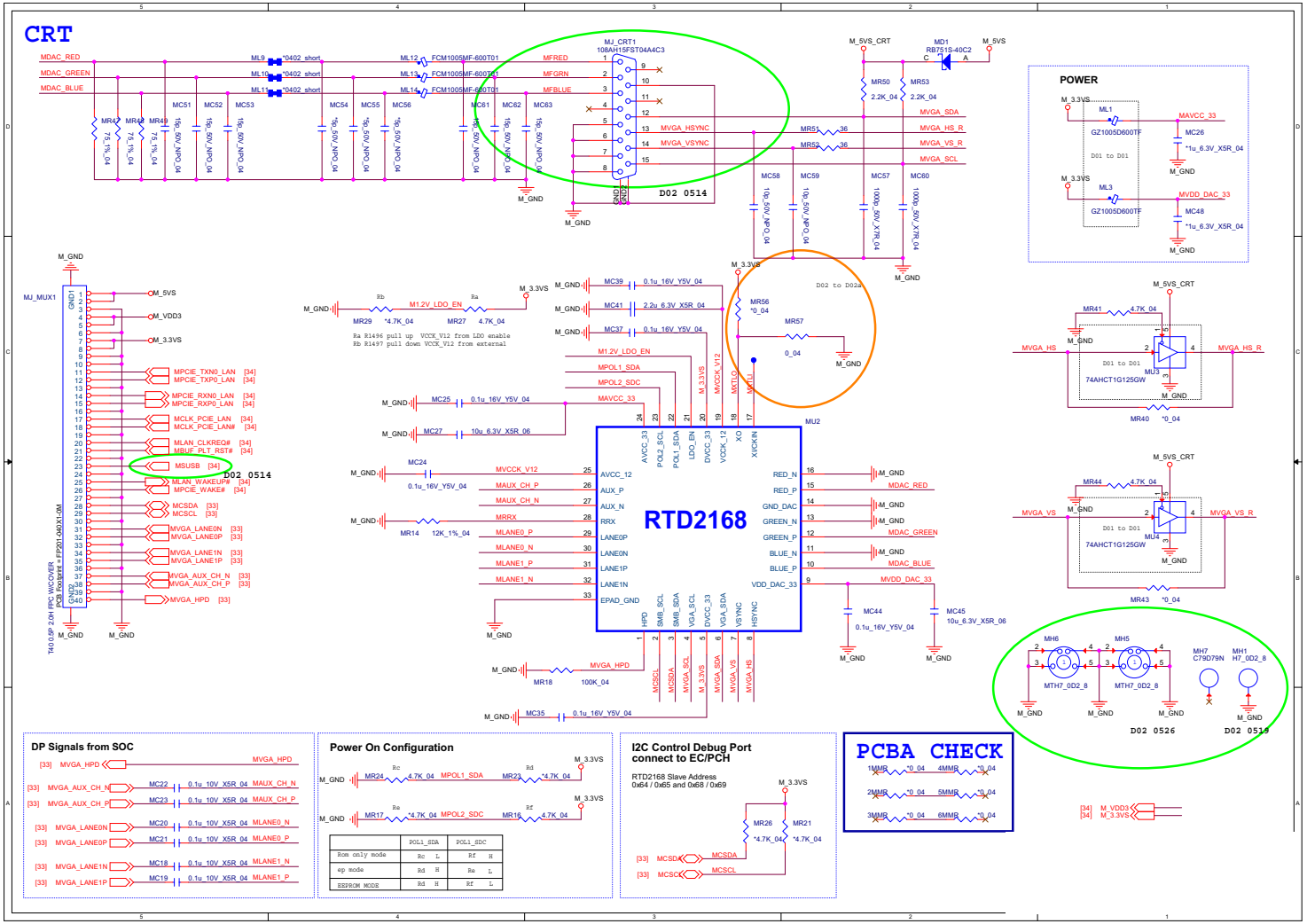

RTL8411B

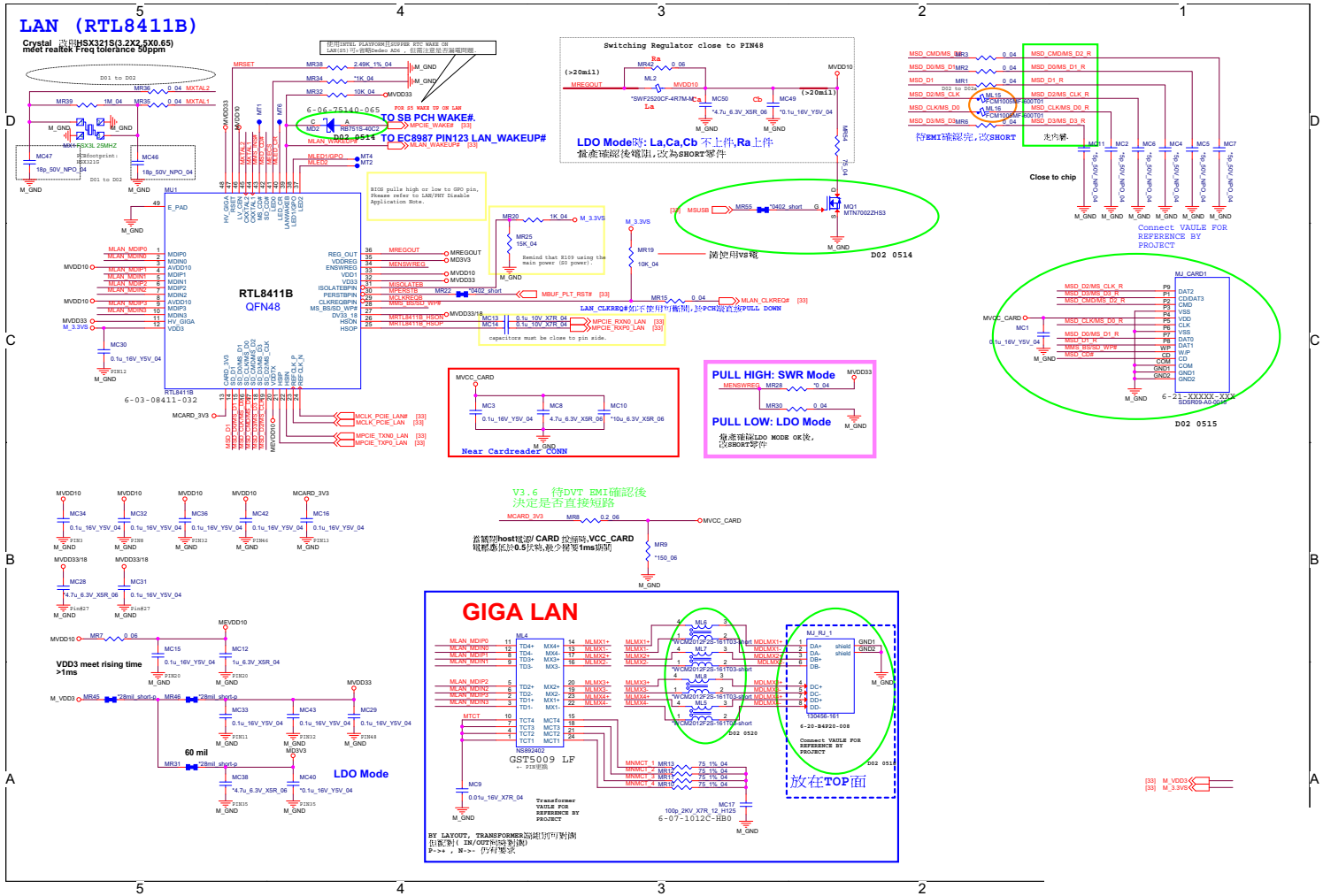

Sheet 34 of 38
RTL8411B

Power SW Board

Sheet 35 of 38
Power SW Board

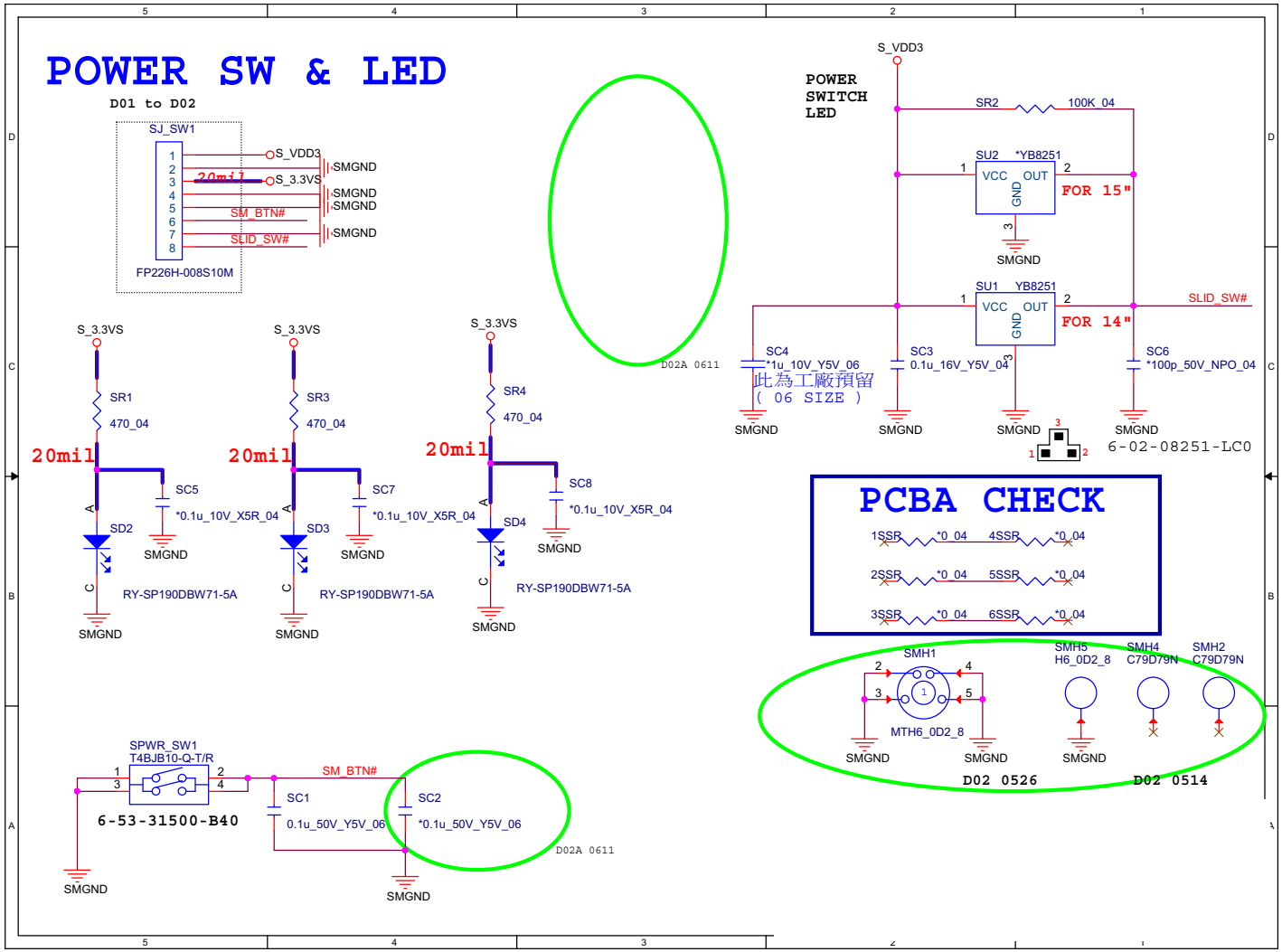

Click Board

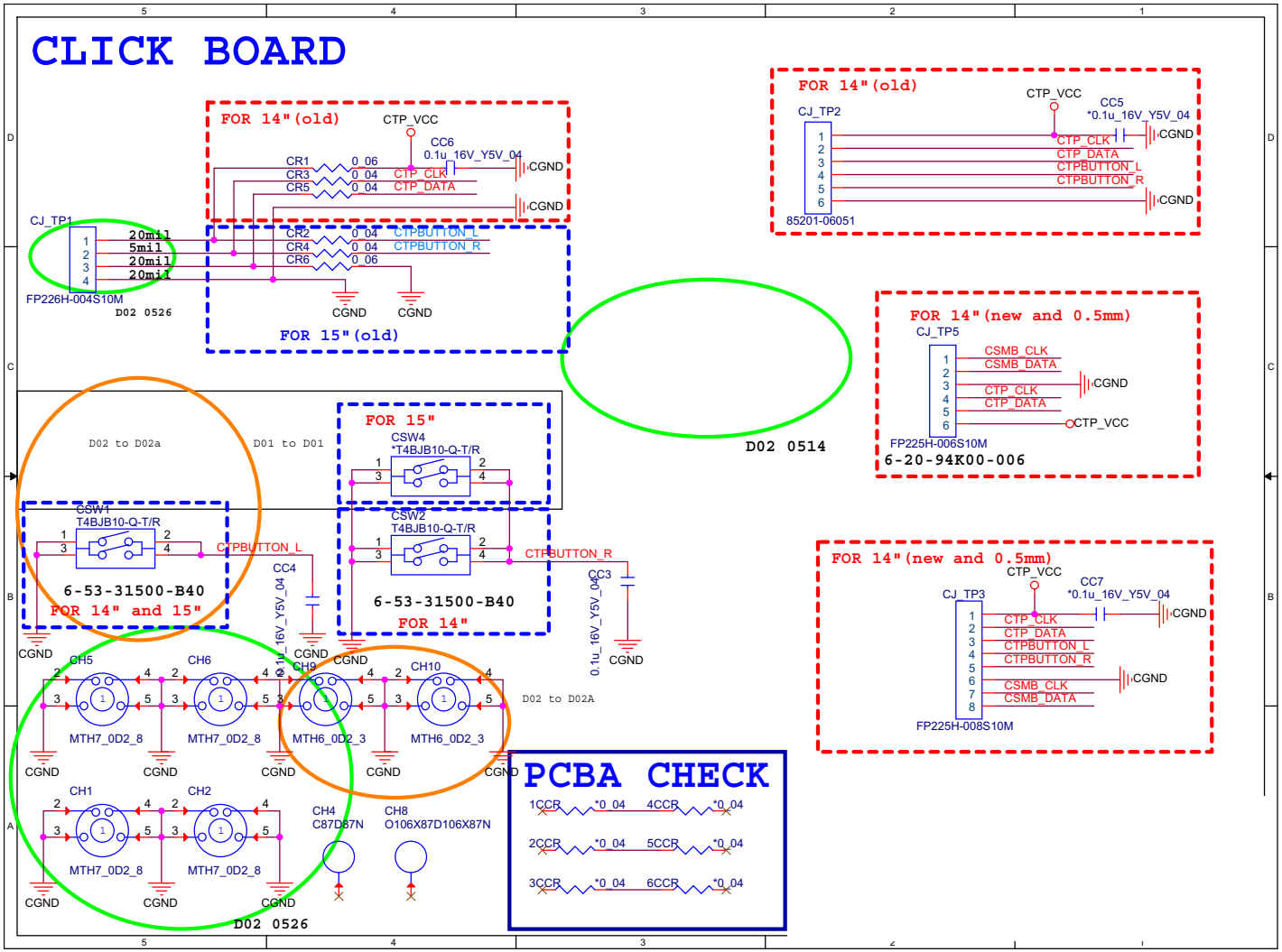

Sheet 36 of 38
Click Board

LED Board

Sheet 37 of 38
LED Board

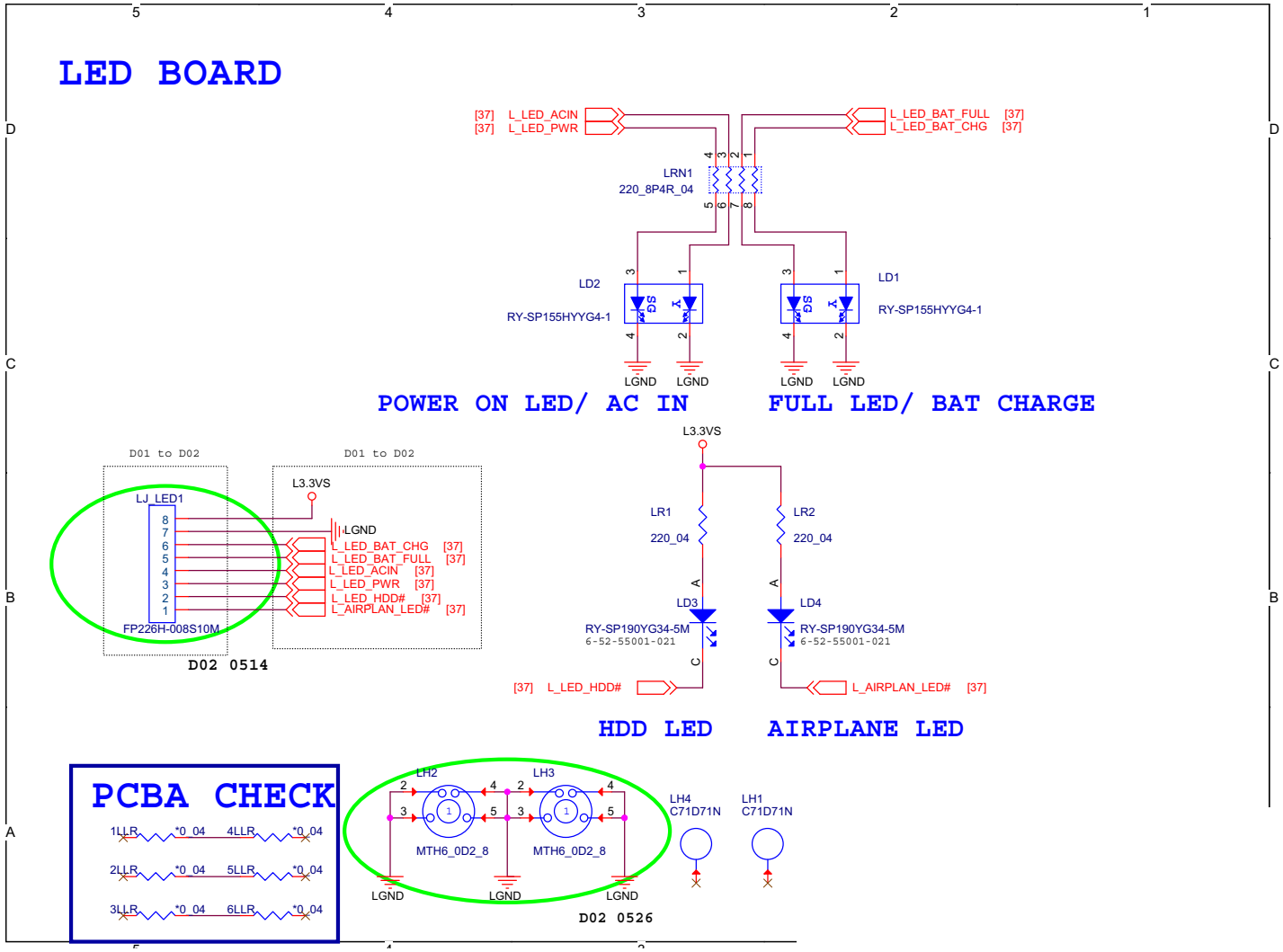

HDD Board

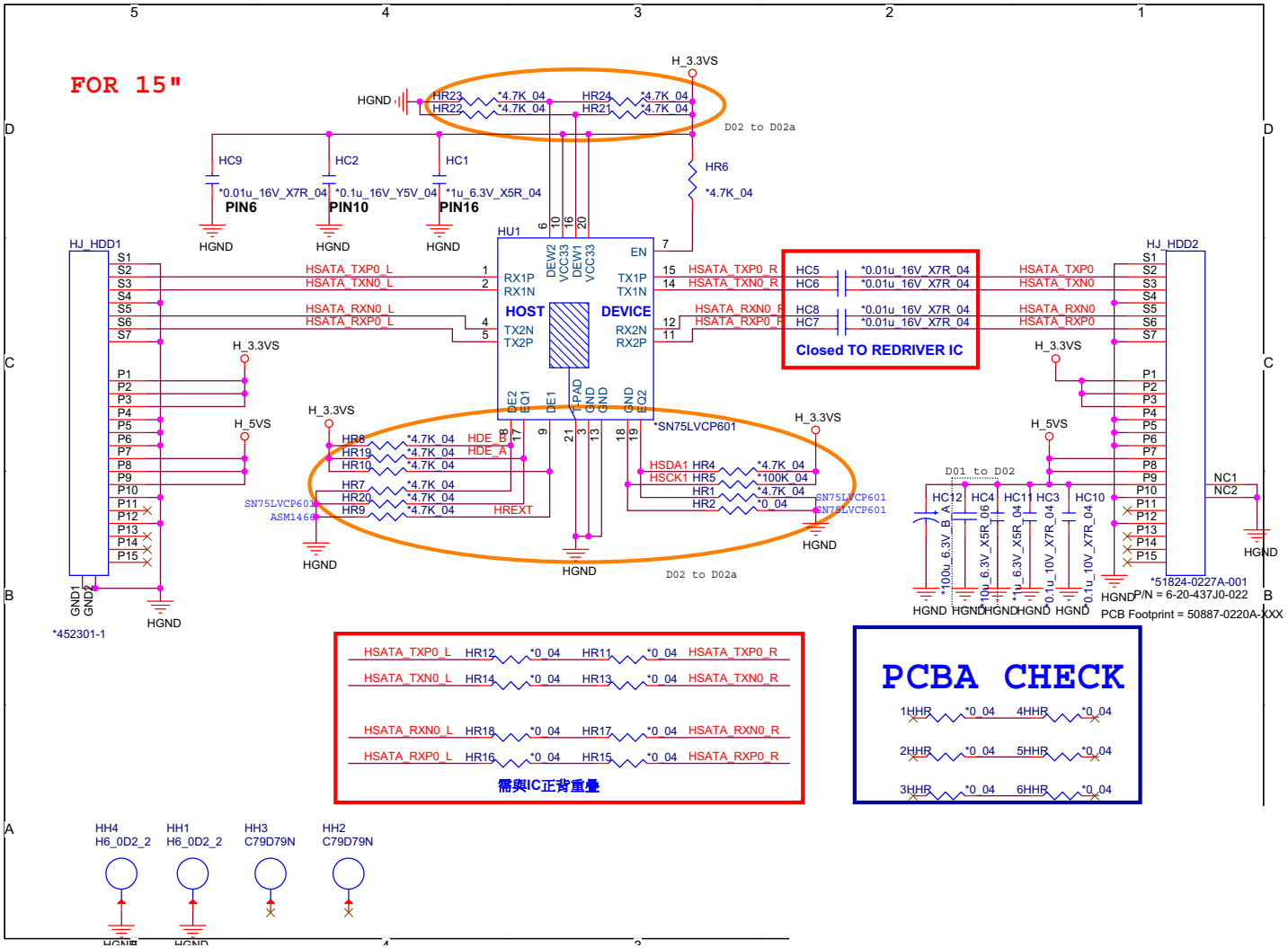

Sheet 38 of 38
HDD Board

Appendix C:Updating the FLASH ROM BIOS

To update the FLASH ROM BIOS, you must:

- Download the BIOS update from the web site.
- Unzip the files onto a bootable CD/DVD/USB Flash Drive.
- Reboot your computer from an external CD/DVD/USB Flash Drive.
- Use the flash tools to update the flash BIOS using the commands indicated below.
- Restart the computer booting from the HDD and press **F2** at startup enter the BIOS.
- Load setup defaults from the BIOS and save the default settings and exit the BIOS to restart the computer.
- After rebooting the computer you may restart the computer again and make any required changes to the default BIOS settings.

Download the BIOS

1. Go to **www.clevo.com.tw** and point to **E-Services** and click **E-Channel**.
2. Use your user ID and password to access the appropriate download area (BIOS), and download the latest BIOS files (the BIOS file will be contained in a batch file that may be run directly once unzipped) for your computer model (**see sidebar for important information on BIOS versions**).

Unzip the downloaded files to a bootable CD/DVD/ or USB Flash drive

1. Insert a bootable CD/DVD/USB flash drive into the CD/DVD drive/USB port of the computer containing the downloaded files.
2. Use a tool such as Winzip or Winrar to unzip all the BIOS files and refresh tools to your bootable CD/DVD/USB flash drive (you may need to create a bootable CD/DVD with the files using a 3rd party software).

Set the computer to boot from the external drive

1. With the bootable CD/DVD/USB flash drive containing the BIOS files in your CD/DVD drive/USB port, restart the computer and press **F2** (in most cases) to enter the BIOS.
2. Use the arrow keys to highlight the **Boot** menu.
3. Use the "+" and "-" keys to move boot devices up and down the priority order.
4. Make sure that the CD/DVD drive/USB flash drive is set first in the boot priority of the BIOS.
5. Press **F4** to save any changes you have made and exit the BIOS to restart the computer.

BIOS Version

Make sure you download the latest correct version of the BIOS appropriate for the computer model you are working on.

You should only download BIOS versions that are V1.01.XX or higher as appropriate for your computer model.

Note that BIOS versions are not backward compatible and therefore **you may not downgrade your BIOS to an older version** after upgrading to a later version (e.g if you upgrade a BIOS to ver 1.01.05, you **MAY NOT** then go back and flash the BIOS to ver 1.01.04).

Use the flash tools to update the BIOS

1. Make sure you are not loading any memory management programs such as HIMEM by holding the **F8** key as you see the message "**EFI Shell**". You will then be prompted to give "**Y**" or "**N**" responses to the programs being loaded by EFI Shell. Choose "N" for any memory management programs.
2. You should now see DISK **fsX**:\> (X is the designated drive number for the CD/DVD drive/USB flash drive).
3. **Type the following command**:

   fsX:\> Flash.nsh

4. The utility will then proceed to flash the BIOS.
5. You should then be prompted to press any key to restart the system or turn the power off, and then on again but make sure you remove the CD/DVD/USB flash drive from the CD/DVD drive/USB port before the computer restarts.

Restart the computer (booting from the HDD)

1. With the CD/DVD/USB flash drive removed from the CD/DVD drive/USB port the computer should restart from the HDD.
2. Press **F2** as the computer restarts to enter the BIOS.
3. Use the arrow keys to highlight the **Exit** menu.
4. Select **Load Setup Defaults** (or press **F3**) and select "**Yes**" to confirm the selection.
5. Press **F4** to save any changes you have made and exit the BIOS to restart the computer.

Your computer is now running normally with the updated BIOS

You may now enter the BIOS and make any changes you require to the default settings.