SERVICE MANUAL

P670RG / P671RG

notebook

Notebook Computer

P670RG

Service Manual

Notice

The company reserves the right to revise this publication or to change its contents without notice. Information contained herein is for reference only and does not constitute a commitment on the part of the manufacturer or any subsequent vendor. They assume no responsibility or liability for any errors or inaccuracies that may appear in this publication nor are they in anyway responsible for any loss or damage resulting from the use (or misuse) of this publication.

This publication and any accompanying software may not, in whole or in part, be reproduced, translated, transmitted or reduced to any machine readable form without prior consent from the vendor, manufacturer or creators of this publication, except for copies kept by the user for backup purposes.

Brand and product names mentioned in this publication may or may not be copyrights and/or registered trademarks of their respective companies. They are mentioned for identification purposes only and are not intended as an endorsement of that product or its manufacturer.

Version 1.0
November 2015

Trademarks

Intel and Intel Core are trademarks of Intel Corporation.
Windows® is a registered trademark of Microsoft Corporation.
Other brand and product names are trademarks and /or registered trademarks of their respective companies.

About this Manual

This manual is intended for service personnel who have completed sufficient training to undertake the maintenance and inspection of personal computers.

It is organized to allow you to look up basic information for servicing and/or upgrading components of the ***P670RG*** series notebook PC.

The following information is included:

Chapter 1, Introduction, provides general information about the location of system elements and their specifications.
Chapter 2, Disassembly, provides step-by-step instructions for disassembling parts and subsystems and how to upgrade elements of the system.

Appendix A, Part Lists
Appendix B, Schematic Diagrams
Appendix C, Updating the FLASH ROM BIOS

IMPORTANT SAFETY INSTRUCTIONS

Follow basic safety precautions, including those listed below, to reduce the risk of fire, electric shock and injury to persons when using any electrical equipment:

1. Do not use this product near water, for example near a bath tub, wash bowl, kitchen sink or laundry tub, in a wet basement or near a swimming pool.
2. Avoid using a telephone (other than a cordless type) during an electrical storm. There may be a remote risk of electrical shock from lightning.
3. Do not use the telephone to report a gas leak in the vicinity of the leak.
4. Use only the power cord and batteries indicated in this manual. Do not dispose of batteries in a fire. They may explode. Check with local codes for possible special disposal instructions.
5. This product is intended to be supplied by a Listed Power Unit as follows:

- AC Input of 100 - 240V, 50 - 60Hz, DC Output of 19V, 10.5A (**200** Watts) minimum AC/DC Adapter.

FCC Statement

This device complies with Part 15 of the FCC Rules. Operation is subject to the following two conditions:
This device may not cause harmful interference.
This device must accept any interference received, including interference that may cause undesired operation.

Instructions for Care and Operation

The notebook computer is quite rugged, but it can be damaged. To prevent this, follow these suggestions:

1. **Don't drop it, or expose it to shock.** If the computer falls, the case and the components could be damaged.

Do not expose the computer to any shock or vibration. 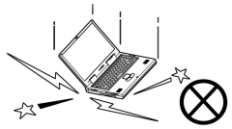	*Do not place it on an unstable surface.* 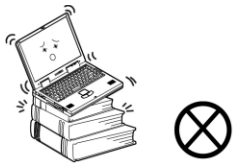	*Do not place anything heavy on the computer.* 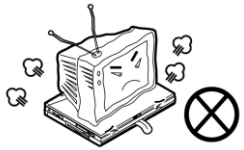

2. **Keep it dry, and don't overheat it.** Keep the computer and power supply away from any kind of heating element. This is an electrical appliance. If water or any other liquid gets into it, the computer could be badly damaged.

Do not expose it to excessive heat or direct sunlight.	*Do not leave it in a place where foreign matter or moisture may affect the system.*	*Don't use or store the computer in a humid environment.* 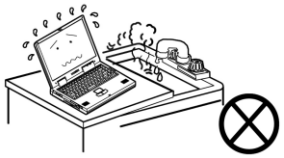	*Do not place the computer on any surface which will block the vents.* 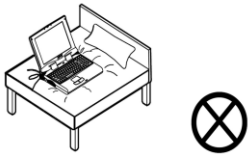

3. **Follow the proper working procedures for the computer**. Shut the computer down properly and don't forget to save your work. Remember to periodically save your data as data may be lost if the battery is depleted.

Do not turn off the power until you properly shut down all programs. 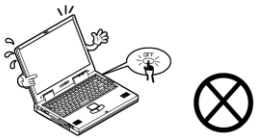	*Do not turn off any peripheral devices when the computer is on.* 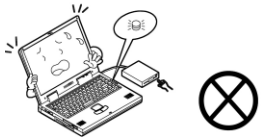	*Do not disassemble the computer by yourself.*	*Perform routine maintenance on your computer.*

4. **Avoid interference.** Keep the computer away from high capacity transformers, electric motors, and other strong magnetic fields. These can hinder proper performance and damage your data.
5. **Take care when using peripheral devices**.

Use only approved brands of peripherals. 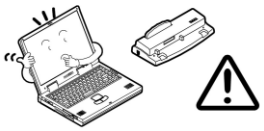	*Unplug the power cord before attaching peripheral devices.* 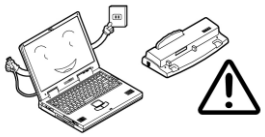

Power Safety

The computer has specific power requirements:

- Only use a power adapter approved for use with this computer.
- Your AC adapter may be designed for international travel but it still requires a steady, uninterrupted power supply. If you are unsure of your local power specifications, consult your service representative or local power company.
- The power adapter may have either a 2-prong or a 3-prong grounded plug. The third prong is an important safety feature; do not defeat its purpose. If you do not have access to a compatible outlet, have a qualified electrician install one.
- When you want to unplug the power cord, be sure to disconnect it by the plug head, not by its wire.
- Make sure the socket and any extension cord(s) you use can support the total current load of all the connected devices.
- Before cleaning the computer, make sure it is disconnected from any external power supplies.

Power Safety Warning

Before you undertake any upgrade procedures, make sure that you have turned off the power, and disconnected all peripherals and cables (including telephone lines and power cord). It is advisable to also remove your battery in order to prevent accidentally turning the machine on.

Do not plug in the power cord if you are wet.	*Do not use the power cord if it is broken.* 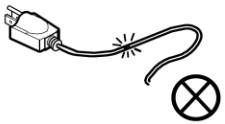	*Do not place heavy objects on the power cord.* 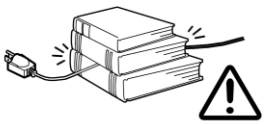

Battery Precautions

- Only use batteries designed for this computer. The wrong battery type may explode, leak or damage the computer.
- Do not continue to use a battery that has been dropped, or that appears damaged (e.g. bent or twisted) in any way. Even if the computer continues to work with a damaged battery in place, it may cause circuit damage, which may possibly result in fire.
- Recharge the batteries using the notebook's system. Incorrect recharging may make the battery explode.
- Do not try to repair a battery pack. Refer any battery pack repair or replacement to your service representative or qualified service personnel.
- Keep children away from, and promptly dispose of a damaged battery. Always dispose of batteries carefully. Batteries may explode or leak if exposed to fire, or improperly handled or discarded.
- Keep the battery away from metal appliances.
- Affix tape to the battery contacts before disposing of the battery.
- Do not touch the battery contacts with your hands or metal objects.

Battery Guidelines

The following can also apply to any backup batteries you may have.

- If you do not use the battery for an extended period, then remove the battery from the computer for storage.
- Before removing the battery for storage charge it to 60% - 70%.
- Check stored batteries at least every 3 months and charge them to 60% - 70%.

Battery Disposal

The product that you have purchased contains a rechargeable battery. The battery is recyclable. At the end of its useful life, under various state and local laws, it may be illegal to dispose of this battery into the municipal waste stream. Check with your local solid waste officials for details in your area for recycling options or proper disposal.

Caution

Danger of explosion if battery is incorrectly replaced. Replace only with the same or equivalent type recommended by the manufacturer. Discard used battery according to the manufacturer's instructions.

Battery Level

Click the battery icon in the taskbar to see the current battery level and charge status. A battery that drops below a level of 10% will not allow the computer to boot up. Make sure that any battery that drops below 10% is recharged within one week.

Related Documents

You may also need to consult the following manual for additional information:

User's Manual on CD/DVD

This describes the notebook PC's features and the procedures for operating the computer and its ROM-based setup program. It also describes the installation and operation of the utility programs provided with the notebook PC.

System Startup

1. Remove all packing materials.
2. Place the computer on a stable surface.
3. Insert the battery and make sure it is locked in position.
4. Securely attach any peripherals you want to use with the computer (e.g. keyboard and mouse) to their ports.
5. Attach the AC/DC adapter to the DC-In jack on the left of the computer, then plug the AC power cord into an outlet, and connect the AC power cord to the AC/DC adapter.
6. Use one hand to raise the lid/LCD to a comfortable viewing angle (do not exceed 135 degrees); use the other hand (as illustrated in Figure 1) to support the base of the computer (**Note**: **Never** lift the computer by the lid/LCD).
7. Press the power button to turn the computer "on".

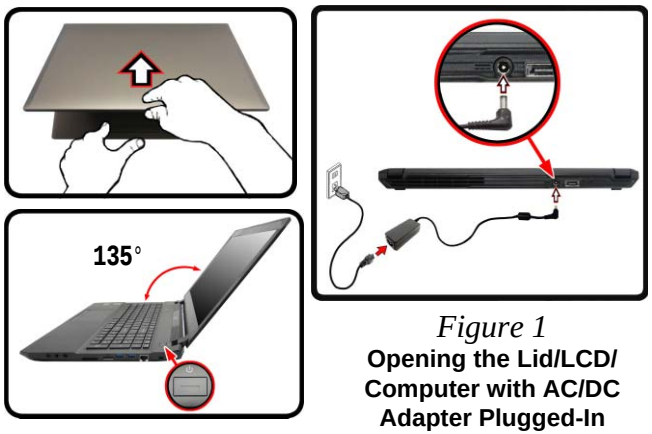

Figure 1
Opening the Lid/LCD/ Computer with AC/DC Adapter Plugged-In

Shut Down

Note that you should always shut your computer down by choosing the **Shut down** command in ***Windows*** (see below). This will help prevent hard disk or system problems.

Click the icon in the **Start Screen** and choose **Shut down** from the menu.

Or

Right-click the **Start button** at the bottom of the **Start Screen** or the **Desktop** and choose **Shut down or sign out > Shut down** from the context menu.

Contents

Introduction 1-1

Overview 1-1
Specifications 1-2
External Locator - Top View with LCD Panel Open 1-4
External Locator - Front & Right Side Views 1-5
External Locator - Left Side & Rear View 1-6
External Locator - Bottom View 1-7
Mainboard Overview - Top (Key Parts) 1-8
Mainboard Overview - Bottom (Key Parts) 1-9
Mainboard Overview - Top (Connectors) 1-10
Mainboard Overview - Bottom (Connectors) 1-11

Disassembly 2-1

Overview 2-1
Maintenance Tools 2-2
Connections 2-2
Maintenance Precautions 2-3
Disassembly Steps 2-4
Removing the Keyboard 2-5
Removing the Battery 2-6
Removing the Hard Disk Drive 2-8
Removing the System Memory (RAM) 2-10
Removing and Installing the the M.2 SSD Module 2-13
Removing the Wireless LAN Module 2-17
Wireless LAN, Combo, 3G & LTE Module Cables 2-18
Removing the M.2 SATA Module 2-19

Part Lists A-1

Part List Illustration Location A-2
Top A-3
Bottom A-4
MB A-5
HDD A-6
LCD A-7

Schematic Diagrams.....B-1

System Block Diagram B-2
Processor 1/7 .....B-3
Processor 2/7 .....B-4
Processor 3/7 .....B-5
Processor 4/7 .....B-6
Processor 5/7 .....B-7
Processor 6/7 .....B-8
Processor 7/7 .....B-9
DDR4 CHA SO-DIMM_0 .....B-10
DDR4 CHA SO-DIMM_1 .....B-11
DDR4 CHB SO-DIMM_0 .....B-12
DDR4 CHB SO-DIMM_1 .....B-13
Panel, Inverter, CRT B-14
Redriver B-15
Mini DP Port E B-16
Mini DP Port F B-17
HDMI Connector B-18
VGA PCI Express B-19
VGA Frame Buffer Partition B-20
Frame Buffer Partition A B-21
Frame Buffer Partition B B-22
Frame Buffer Partition A_B B-23
GPU Frame Buffer Partition B-24
Frame Buffer Partition C B-25
Frame Buffer Partition D B-26
Frame Buffer Partition C_D B-27

GPU Decoupling B-28
DACA Interface & XTAL B-29
IFP I/O Interface B-30
Misc - GPIO, I2C and ROM B-31
GPU NVVDD, FBVDDQ, and GND B-32
PCH 1/9 ..... B-33
PCH 2/9 ..... B-34
PCH 3/9 ..... B-35
PCH 4/9 ..... B-36
PCH 5/9 ..... B-37
PCH 6/9 ..... B-38
PCH 7/9 ..... B-39
PCH 8/9 ..... B-40
PCH 9/9 ..... B-41
USB3.0 ..... B-42
USB Charger B-43
M.2 3G + M.2 SATA B-44
M.2 WLAN+BT, PCIE4X SSD B-45
Realtek ALC892 ..... B-46
TPA2008D2 ..... B-47
Subwoofer B-48
KBC-ITE IT8587 ..... B-49
TPM, CCD, TP B-50
Fan, LID, KB, LED B-51
Connector B-52
DDR 1.2V / 0.6VS B-53
VDD3, VDD5 ..... B-54
5V, 5VS, 3.3V, 3.3VS, 3.3VA B-55
Power 1.0V, VCCIO B-56
AC_In, Charger B-57
1.0DX_VCCSTG/VCCSFR_OC/2.5V B-58
PEX_VDD, 3V3_AON, 3V3_RUN B-59
NVVDD Phase 1 & 2 ..... B-60
FBVDDQ B-61
VCC_Core & VCCSA B-62
VCore & VCCSA Output Stage B-63
VCCGT B-64
VCCGT Output Stage B-65
P650RE Audio Board A B-66
P650RE Power Board B-67
P650RE HDD Board B-68
P650RE LED Board B-69
Finger Sensor Board B-70
P650RE Click Board B-71
P650RE USB Board 1/3 ..... B-72
P650RE USB Board 2/3 ..... B-73
P650RE USB Board 3/3 ..... B-74
P670RE USB Board 1/3 ..... B-75
P670RE USB Board 2/3 ..... B-76
P670RE USB Board 3/3 ..... B-77
P670RE LED Board B-78
P655RE Power Board B-79
P655RE LED Board B-80

Updating the FLASH ROM BIOS..... C-1

Download the BIOS C-1
Unzip the downloaded files to a bootable CD/DVD/ or
1USB Flash drive C-1
Set the computer to boot from the external drive C-1
Use the flash tools to update the BIOS C-2
Restart the computer (booting from the HDD) C-2

Chapter 1: Introduction

Overview

This manual covers the information you need to service or upgrade the ***P670RG*** series notebook computer. Information about operating the computer (e.g. getting started, and the *Setup* utility) is in the *User's Manual*. Information about drivers (e.g. VGA & audio) is also found in the *User's Manual*. The manual is shipped with the computer.

Operating systems (e.g. *Windows 8.1*, etc.) have their own manuals as do application softwares (e.g. word processing and database programs). If you have questions about those programs, you should consult those manuals.

The ***P670RG*** series notebook is designed to be upgradeable. See ***Disassembly on page 2 - 1*** for a detailed description of the upgrade procedures for each specific component. Please take note of the warning and safety information indicated by the "🔔" symbol.

The balance of this chapter reviews the computer's technical specifications and features.

Specifications

Latest Specification Information

The specifications listed in this section are correct at the time of going to press. Certain items (particularly processor types/speeds) may be changed, delayed or updated due to the manufacturer's release schedule. Check with your service center for details.

G-SYNC Support

NVIDIA® G-SYNC™ Technology is supported by some LCD panels and GTX 970M/980M series video adapters only (contact your distributor or supplier for details).

CPU Speed & Computer in DC Mode

Note that when the computer is in DC mode (powered by the battery only) the CPU may not run at full speed. This is a design feature implemented in order to protect the battery.

Processor Options

i7-6820HK (2.70GHz)

8MB Smart Cache, **14nm**, DDR4-2133MHz, TDP 45W

Support Intel® XTU over-clocking technology on i7-6820HK

i7-6700HQ (2.60GHz)

6MB Smart Cache, **14nm**, DDR4-2133MHz,

TDP 45W

Core Logic

Intel® HM170 Express Chipset

LCD Options

17.3" (43.94cm), 16:9, FHD (1920x1080)

BIOS

AMI BIOS (64Mb SPI Flash-ROM)

Memory

Four 260 Pin SO-DIMM Sockets Supporting **DDR4 2133MHz** Memory

Memory Expandable from **4GB** (**minimum**) up to **64GB** (**maximum**)

SO-DIMM Memory Types

All SO-DIMM memory modules installed in the system should be identical (the same size and brand) in order to prevent unexpected system behavior.

Do not mix SO-DIMM memory module sizes and brands otherwise unexpected system problems may occur.

Security

Security (Kensington® Type) Lock Slot

BIOS Password

Intel PTT for Systems Without TPM Hardware

(**Factory Option**) TPM 2.0

(**Factory Option**) Fingerprint Reader Module

Video Adapter Options

Microsoft Hybrid Graphics Mode or Discrete Graphics Mode

Supports up to 4 Active Displays

Intel Integrated GPU

Intel® HD Graphics 530

Dynamic Frequency

Intel Dynamic Video Memory Technology

Microsoft DirectX®12 Compatible

NVIDIA® Discrete GPU

NVIDIA® GeForce GTX 980M

8GB GDDR5 Video RAM

Microsoft DirectX®12 Compatible

Storage

(**Factory Option**) Two **SATA** M.2 2280 SSDs supporting RAID level 0/1

Or

(**Factory Option**) One **PCIe Gen3 x4** M.2 2280 SSD

Two Changeable 2.5" (6cm) **SATA** (Serial) Hard Disk Drives (HDDs)/SSDs (**1st: 7.0mm (h) & 2nd: 7.0mm/9.5mm (h)**) supporting RAID Level 0/1

Pointing Device

Built-in Touchpad (scrolling key functionality integrated)

Keyboard

Full-size Winkey **Illuminated White-LED** Keyboard (with numeric keypad)

Audio

High Definition Audio Compliant Interface
S/PDIF Digital Output
Two Speakers
Sound Blaster Audio
ANSP™ 3D sound technology on headphone output
Built-In Array Microphone
Sub-Woofer

Note: External 5.1CH Audio Output Supported by Headphone, Microphone and S/PDIF Out Jacks

Communication

Built-In Gigabit Ethernet LAN
2.0M FHD PC Camera Module

WLAN/ Bluetooth M.2 Modules:

(**Factory Option**) Intel® Wireless-AC 8260 Wireless LAN (**802.11ac**) + Bluetooth **4.1**

(**Factory Option**) Intel® Wireless-N 7265 Wireless LAN (**802.11b/g/n**) + Bluetooth **4.0**

(**Factory Option**) Intel® Wireless-AC 3165 Wireless LAN (**802.11ac**) + Bluetooth **4.0**

(**Factory Option**) Qualcomm® Atheros Killer™ Wireless-AC 1535 Wireless LAN (**802.11ac**) + Bluetooth **4.1**

(**Factory Option**) Third-Party Wireless LAN **802.11b/g/n** + Bluetooth **4.0**

Interface

Four USB 3.0 Ports (Including one AC/DC Powered USB port)
One HDMI-Out Port
Two Mini DisplayPorts (1.2)
One S/PDIF Out Jack
One Headphone/Speaker-Out Jack
One Microphone-In Jack
One RJ-45 LAN Jack
One DC-In Jack

M.2 Slots

Slot 1 for **Combo WLAN and Bluetooth** Module
Slot 2 for **SATA** or **PCIe Gen3 x4 SSD**
Slot 3 for **SATA SSD**

M.2 SSD Limitation

When slot 3 has an M.2 SATA SSD installed, then slot 2 will not be available for M.2 PCIe SSDs.

Card Reader

Embedded Multi-In-1 Push-Push Card Reader
MMC (MultiMedia Card) / RS MMC
SD (Secure Digital) / Mini SD / SDHC/ SDXC

Environmental Spec

Temperature
Operating: 5°C - 35°C
Non-Operating: -20°C - 60°C
Relative Humidity
Operating: 20% - 80%
Non-Operating: 10% - 90%

Power

Embedded 4-Cell Polymer Battery Pack, 60WH

Full Range AC/DC Adapter
AC Input: 100 - 240V, 50 - 60Hz
DC Output: 19V, 10.5A (**200W**)

Dimensions & Weight

417mm (w) * 287mm (d) * 29.98mm (h)
3.3kg (Barebone with 60WH Battery)

External Locator - Top View with LCD Panel Open

Figure 1
Top View

1. PC Camera
2. *PC Camera LED
   When the PC camera is in use, the LED will be illuminated in red.
3. Built-In Microphone
4. LCD
5. Power Button
6. Speakers
7. Keyboard
8. Touchpad & Buttons
9. Fingerprint Reader (**Optional**)

External Locator - Front & Right Side Views

FRONT VIEW

Figure 2
Front View

1. LED Indicator

RIGHT SIDE VIEW

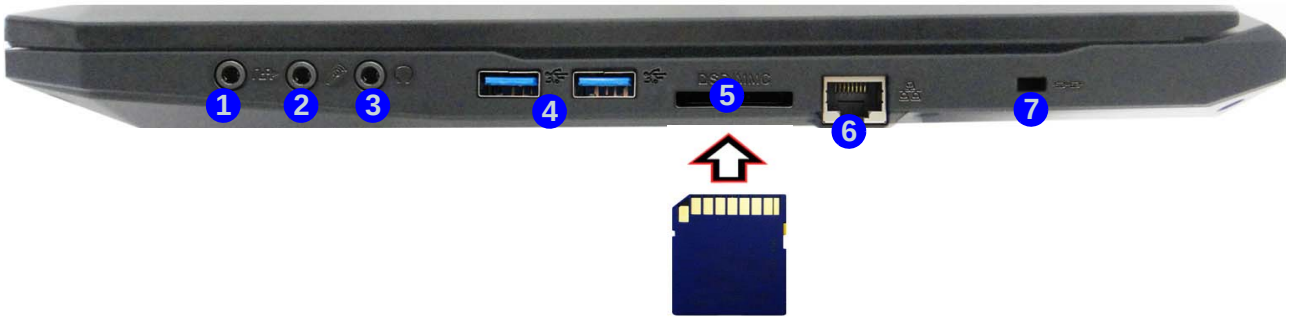

Figure 3
Right Side View

1. S/PDIF-Out Jack
2. Microphone-In Jack
3. Headphone-Out Jack
4. USB 3.0 Ports
5. Multi-in-1 Card Reader
6. RJ-45 LAN Jack
7. Security Lock Slot

External Locator - Left Side & Rear View

Figure 4
Left Side View

1. Vent
2. HDMI-Out Port
3. Powered USB 3.0 Port
4. Mini DisplayPorts

LEFT SIDE VIEW

Figure 5
Rear View

1. Vent
2. DC-In Jack
3. USB 3.0 Port

REAR VIEW

External Locator - Bottom View

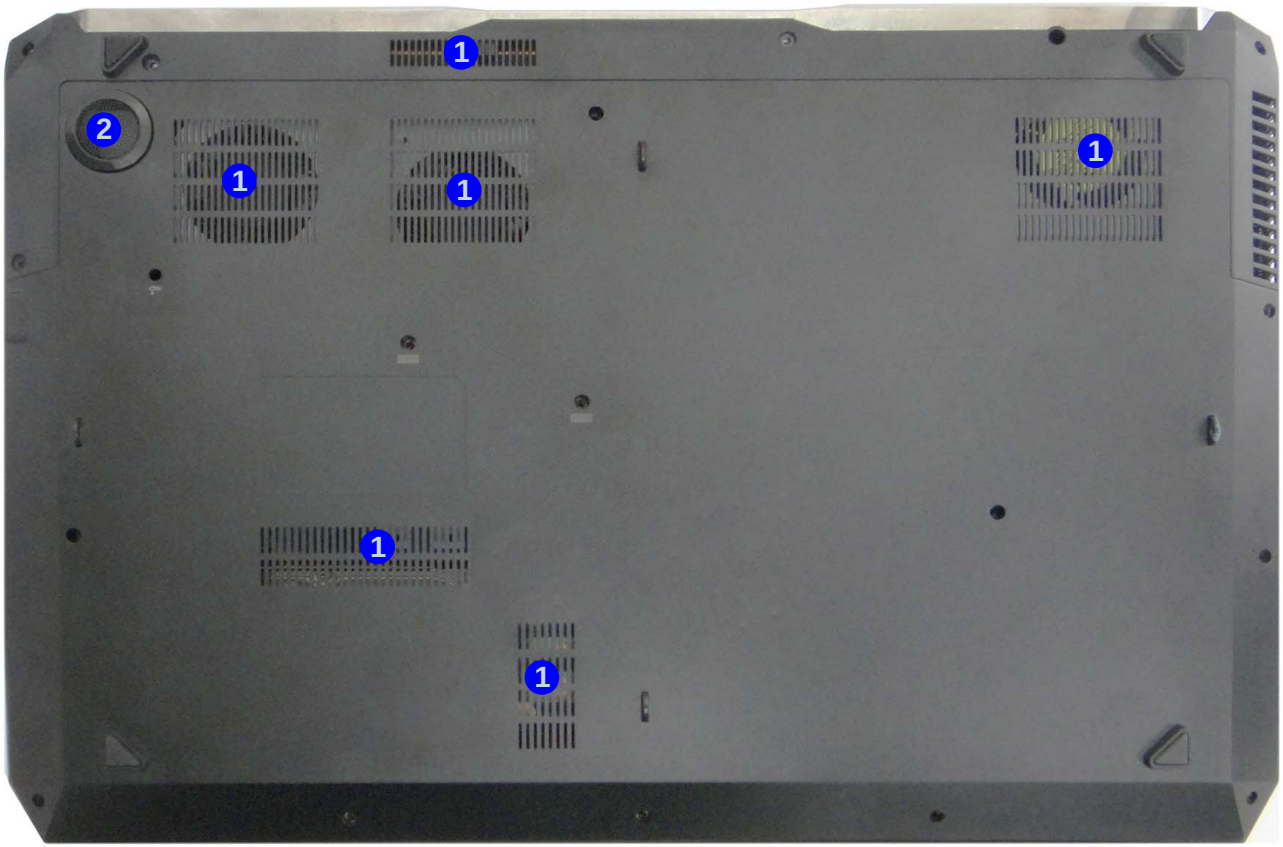

Figure 6
Bottom View

1. Vent
2. Sub Woofer

Overheating

To prevent your computer from overheating, make sure nothing blocks any vent while the computer is in use.

Mainboard Overview - Top (Key Parts)

Figure 7
Mainboard Top Key Parts

1. Memory Slots DDR4 SO-DIMM
2. KBC-ITE IT8587
3. CMOS Battery

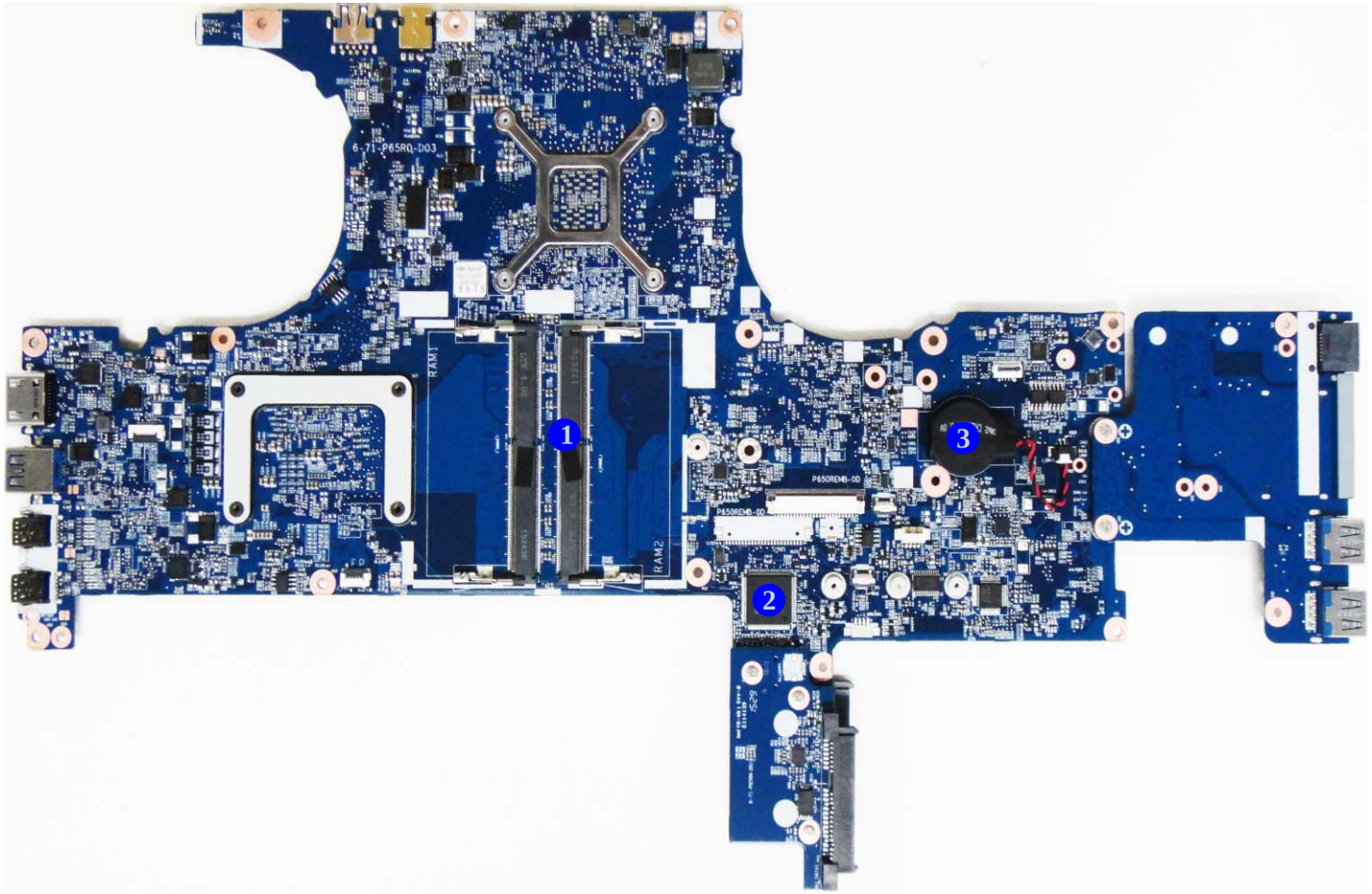

Mainboard Overview - Bottom (Key Parts)

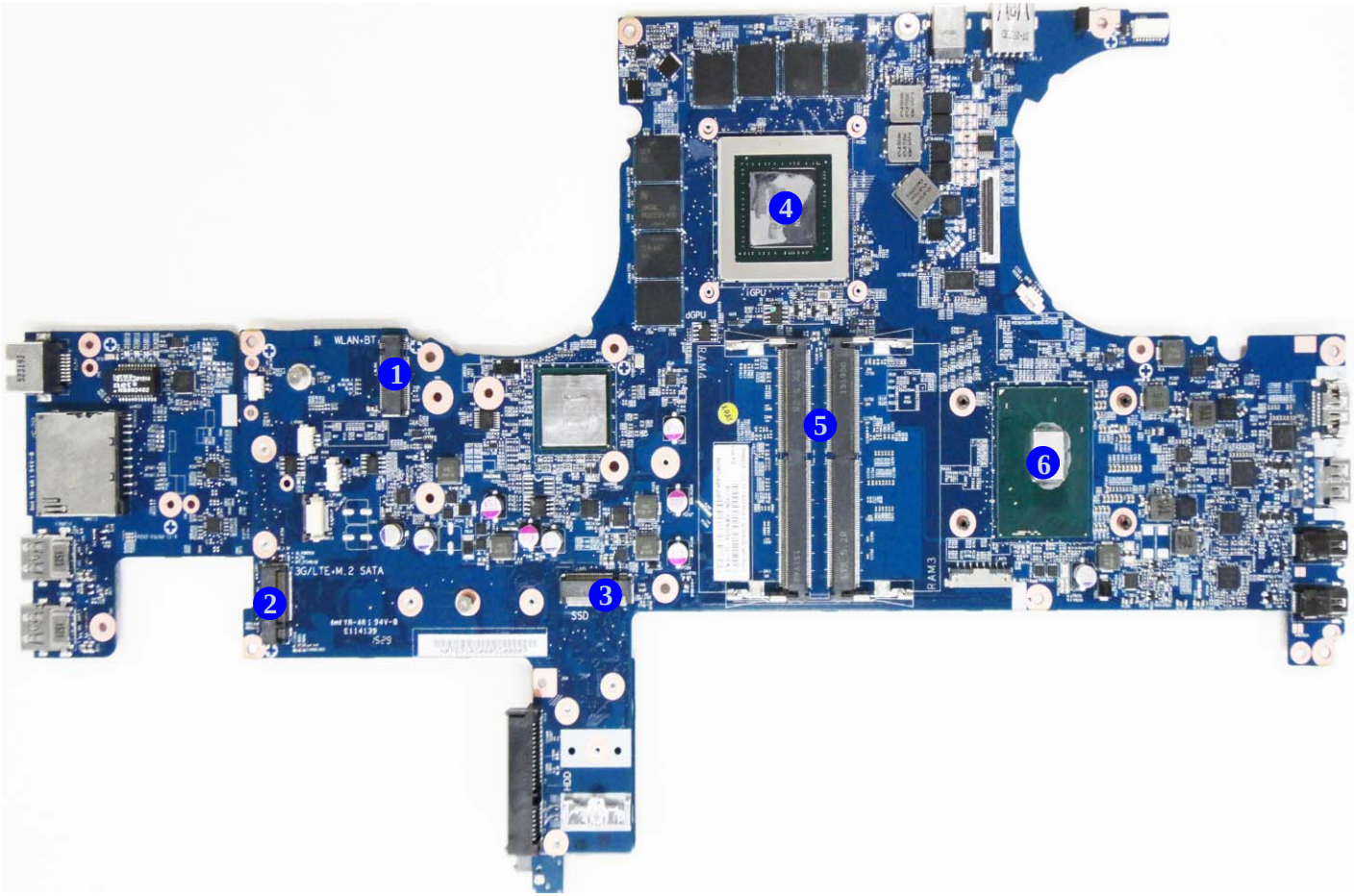

Figure 8
Mainboard Bottom Key Parts

1. Mini-Card Connector (WLAN Module)
2. Mini-Card Connector (M.2 3G/SATA Module)
3. Mini-Card Connector (M.2 PCIE/SATA SSD Module)
4. GPU-GTX980M
5. Memory Slots DDR4 SO-DIMM
6. CPU

Mainboard Overview - Top (Connectors)

Figure 9
Mainboard Top Connectors

1. HDMI-Out Port
2. Powered USB Port 3.0 Connector
3. Mini Display Port
4. USB Port 3.0 Connector
5. DC-In Jack
6. Keyboard Cable Connector
7. TP Connector
8. Speaker Connector
9. HDD Connector
10. RJ-45 LAN Jack

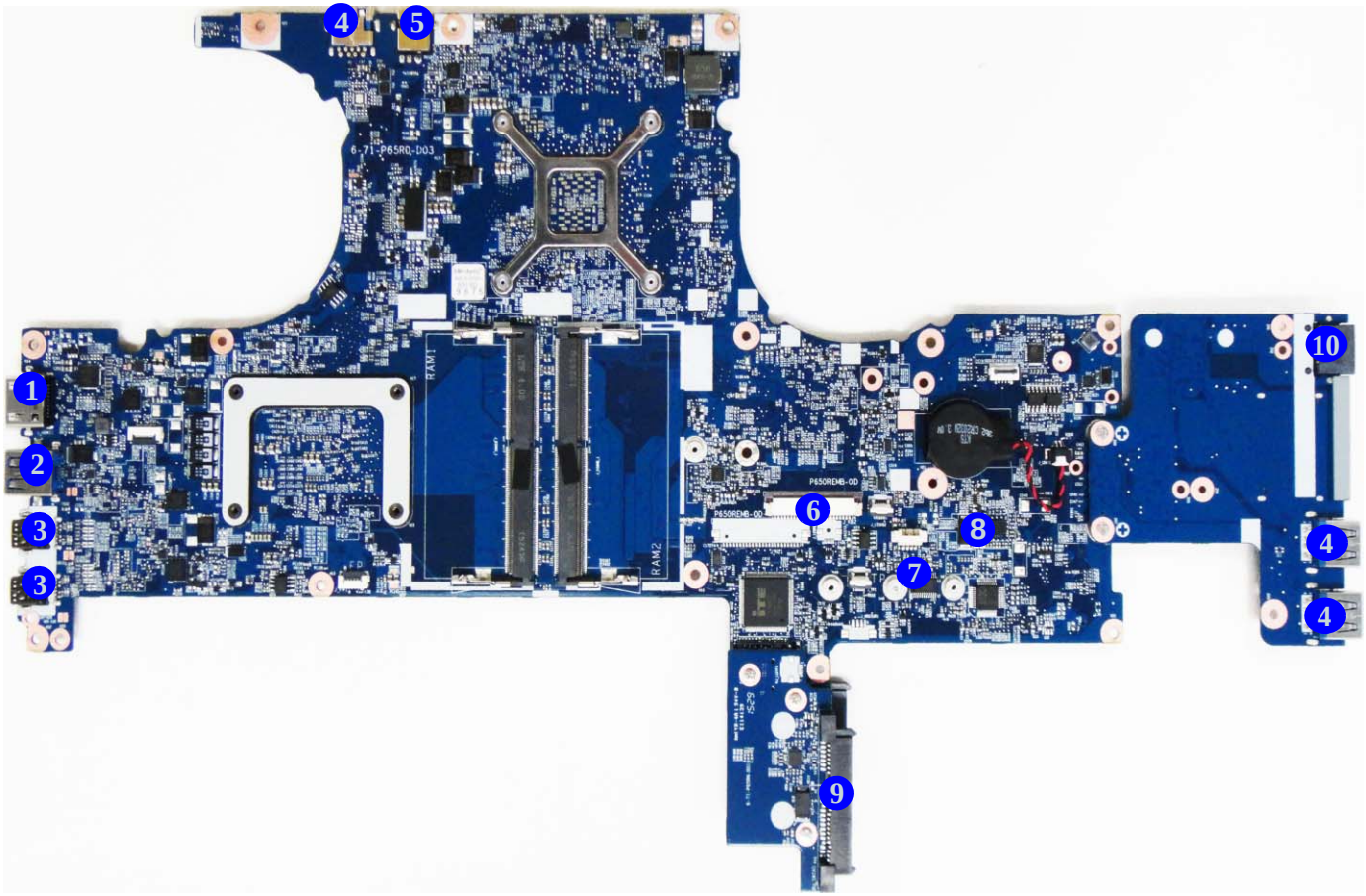

Mainboard Overview - Bottom (Connectors)

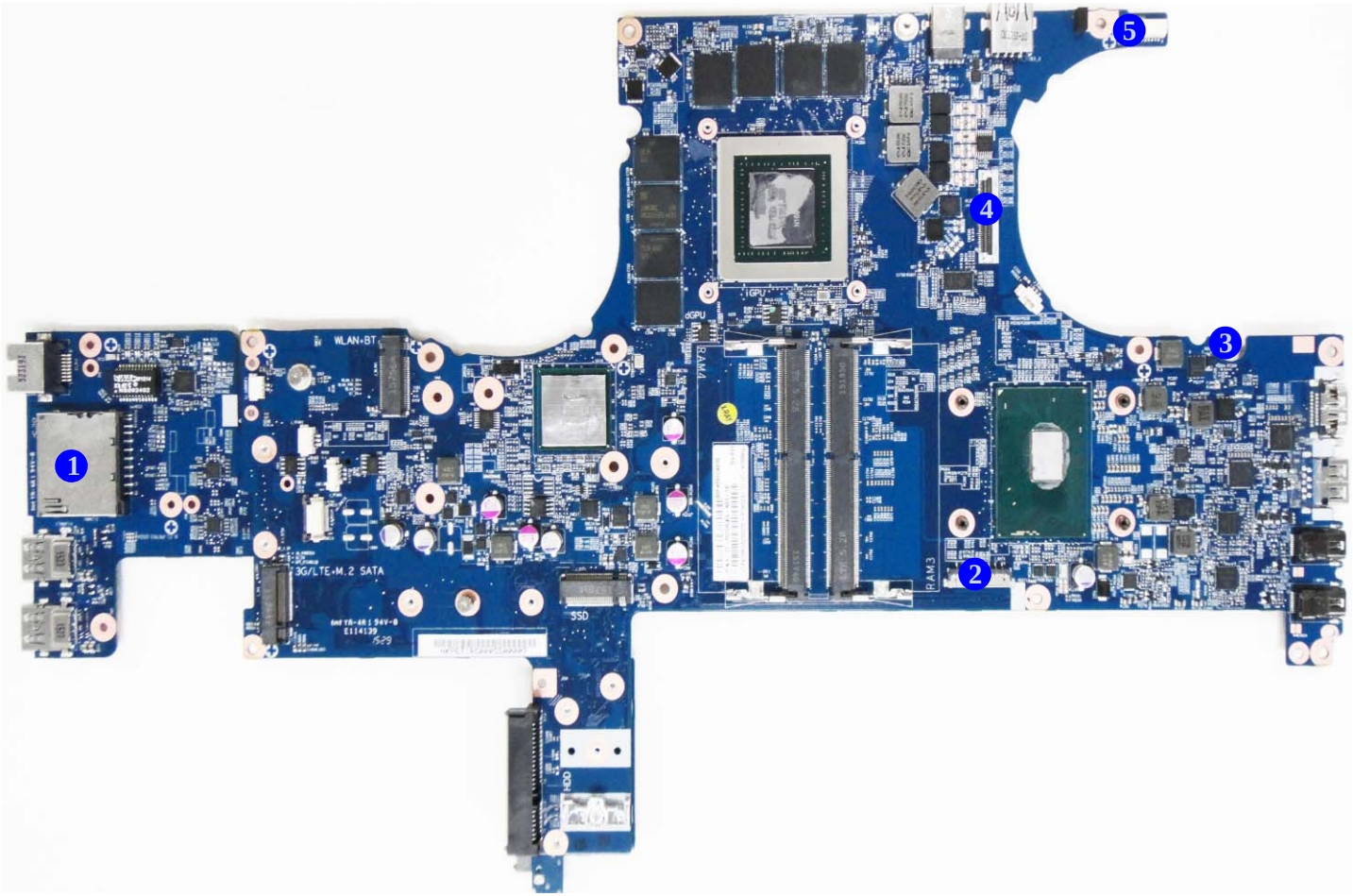

Figure 10
Mainboard Bottom Connectors

1. Multi-in-1 Card Reader
2. Battery Connector
3. Fan Connector
4. LCD Cable Connector
5. CCD Connector

Chapter 2: Disassembly

Overview

This chapter provides step-by-step instructions for disassembling the ***P670RG*** series notebook's parts and subsystems. When it comes to reassembly, reverse the procedures (unless otherwise indicated).

We suggest you completely review any procedure before you take the computer apart.

Procedures such as upgrading/replacing the RAM, optical device and hard disk are included in the User's Manual but are repeated here for your convenience.

To make the disassembly process easier each section may have a box in the page margin. Information contained under the figure # will give a synopsis of the sequence of procedures involved in the disassembly procedure. A box with a lists the relevant parts you will have after the disassembly process is complete. **Note**: The parts listed will be for the disassembly procedure listed ONLY, and not any previous disassembly step(s) required. Refer to the part list for the previous disassembly procedure. The amount of screws you should be left with will be listed here also.

A box with a will also provide any possible helpful information. A box with a contains warnings.

An example of these types of boxes are shown in the sidebar.

Information

Warning

NOTE: All disassembly procedures assume that the system is turned **OFF**, and disconnected from any power supply (the battery is removed too).

Maintenance Tools

The following tools are recommended when working on the notebook PC:

- M3 Philips-head screwdriver
- M2.5 Philips-head screwdriver (magnetized)
- M2 Philips-head screwdriver
- Small flat-head screwdriver
- Pair of needle-nose pliers
- Anti-static wrist-strap

Connections

Connections within the computer are one of four types:

Locking collar sockets for ribbon connectors	To release these connectors, use a small flat-head screwdriver to gently pry the locking collar away from its base. When replacing the connection, make sure the connector is oriented in the same way. The pin1 side is usually not indicated.
Pressure sockets for multi-wire connectors	To release this connector type, grasp it at its head and gently rock it from side to side as you pull it out. Do not pull on the wires themselves. When replacing the connection, do not try to force it. The socket only fits one way.
Pressure sockets for ribbon connectors	To release these connectors, use a small pair of needle-nose pliers to gently lift the connector away from its socket. When replacing the connection, make sure the connector is oriented in the same way. The pin1 side is usually not indicated.
Board-to-board or multi-pin sockets	To separate the boards, gently rock them from side to side as you pull them apart. If the connection is very tight, use a small flat-head screwdriver - use just enough force to start.

Maintenance Precautions

The following precautions are a reminder. To avoid personal injury or damage to the computer while performing a removal and/or replacement job, take the following precautions:

1. **Don't drop it**. Perform your repairs and/or upgrades on a stable surface. If the computer falls, the case and other components could be damaged.
2. **Don't overheat it**. Note the proximity of any heating elements. Keep the computer out of direct sunlight.
3. **Avoid interference**. Note the proximity of any high capacity transformers, electric motors, and other strong magnetic fields. These can hinder proper performance and damage components and/or data. You should also monitor the position of magnetized tools (i.e. screwdrivers).
4. **Keep it dry**. This is an electrical appliance. If water or any other liquid gets into it, the computer could be badly damaged.
5. **Be careful with power**. Avoid accidental shocks, discharges or explosions.
   - Before removing or servicing any part from the computer, turn the computer off and detach any power supplies.
   - When you want to unplug the power cord or any cable/wire, be sure to disconnect it by the plug head. Do not pull on the wire.
6. **Peripherals** – Turn off and detach any peripherals.
7. **Beware of static discharge**. ICs, such as the CPU and main support chips, are vulnerable to static electricity. Before handling any part in the computer, discharge any static electricity inside the computer. When handling a printed circuit board, do not use gloves or other materials which allow static electricity buildup. We suggest that you use an anti-static wrist strap instead.
8. **Beware of corrosion**. As you perform your job, avoid touching any connector leads. Even the cleanest hands produce oils which can attract corrosive elements.
9. **Keep your work environment clean**. Tobacco smoke, dust or other air-born particulate matter is often attracted to charged surfaces, reducing performance.
10. **Keep track of the components**. When removing or replacing any part, be careful not to leave small parts, such as screws, loose inside the computer.

Power Safety Warning

Before you undertake any upgrade procedures, make sure that you have turned off the power, and disconnected all peripherals and cables (including telephone lines and power cord). It is advisable to also remove your battery in order to prevent accidentally turning the machine on.

Cleaning

Do not apply cleaner directly to the computer, use a soft clean cloth.
Do not use volatile (petroleum distillates) or abrasive cleaners on any part of the computer.

Disassembly Steps

The following table lists the disassembly steps, and on which page to find the related information. **PLEASE PERFORM THE DISASSEMBLY STEPS IN THE ORDER INDICATED.**

To remove the Keyboard:

1. Remove the keyboard *page 2 - 5*

To remove the Battery:

1. Remove the battery *page 2 - 6*

To remove the HDD:

1. Remove the battery *page 2 - 6*
2. Remove the HDD *page 2 - 8*

To remove the System Memory:

1. Remove the battery *page 2 - 6*
2. Remove the system memory *page 2 - 10*

To remove the M.2 SSD Module:

1. Remove the battery *page 2 - 6*
2. Remove the M.2 SSD *page 2 - 13*
3. Install the M.2 SSD *page 2 - 15*

To remove the Wireless LAN Module:

1. Remove the battery *page 2 - 6*
2. Remove the WLAN *page 2 - 17*

To remove the M.2 SATA Module:

1. Remove the battery *page 2 - 6*
2. Remove the M.2 SATA *page 2 - 19*

Removing the Keyboard

1. Turn **off** the computer, turn it over.
2. Remove screws 1 - 2 from the bottom of the computer.
3. Open it up with the LCD on a flat surface before pressing at point 3 to release the keyboard module (use the special eject stick 4 to do this) while releasing the keyboard in the direction of the arrow 5 as shown (***Figure 1a***).
4. Carefully lift the keyboard 6 up, being careful not to bend the keyboard ribbon cable 7. Disconnect the keyboard ribbon cable 7 from the locking collar socket by using a flat-head screwdriver to pry the locking collar pins 8 away from the base (***Figure 1b***).
5. Carefully lift the keyboard 6 off the computer (***Figure 1c***).

a.

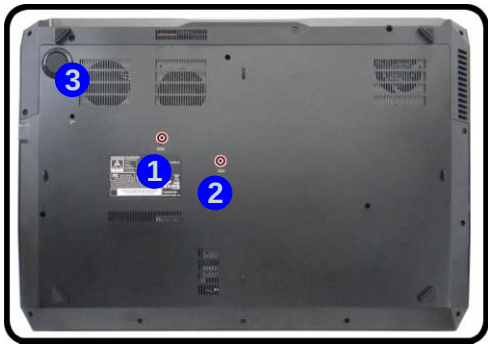

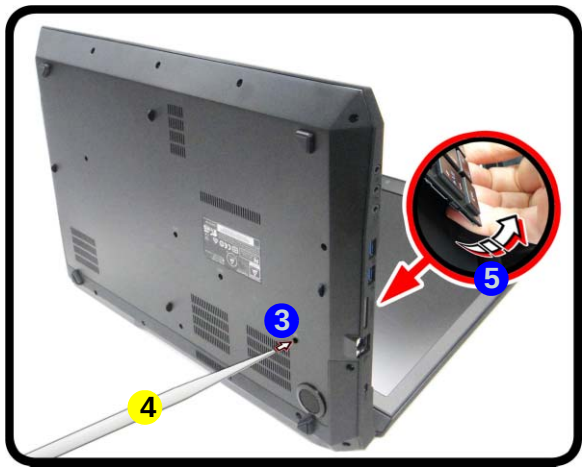

b.

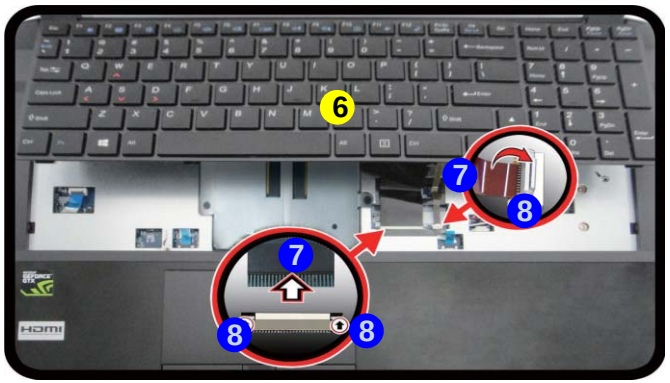

c.

Figure 1
Keyboard Removal

a. Remove screws from the bottom of the computer and then eject the keyboard using a special eject stick to push the keyboard out while releasing the keyboard as shown.
b. Lift the keyboard up and disconnect the keyboard ribbon cable from the locking collar socket.
c. Remove the keyboard.

Re-inserting the Keyboard

When re-inserting the keyboard firstly, align the keyboard tabs at the bottom of the keyboard with the slots in the case.

4. Eject Stick
6. Keyboard

- 2 Screws

Figure 2
Battery Removal

a. Remove the SD cover and screws.
b. Remove the screws at the rear of the computer.
c. Remove the bottom case to locate the battery.

Removing the Battery

1. Turn the computer **off**, and turn it over.
2. Remove the SD card cover 1 and screws 2 - 19 (***Figure 2a***).
3. Carefully lift the bottom case 20 up in the direction of the arrow 21 and remove it (***Figure 2b***).
4. The battery will be visible at point 22 on the computer (***Figure 2c***).

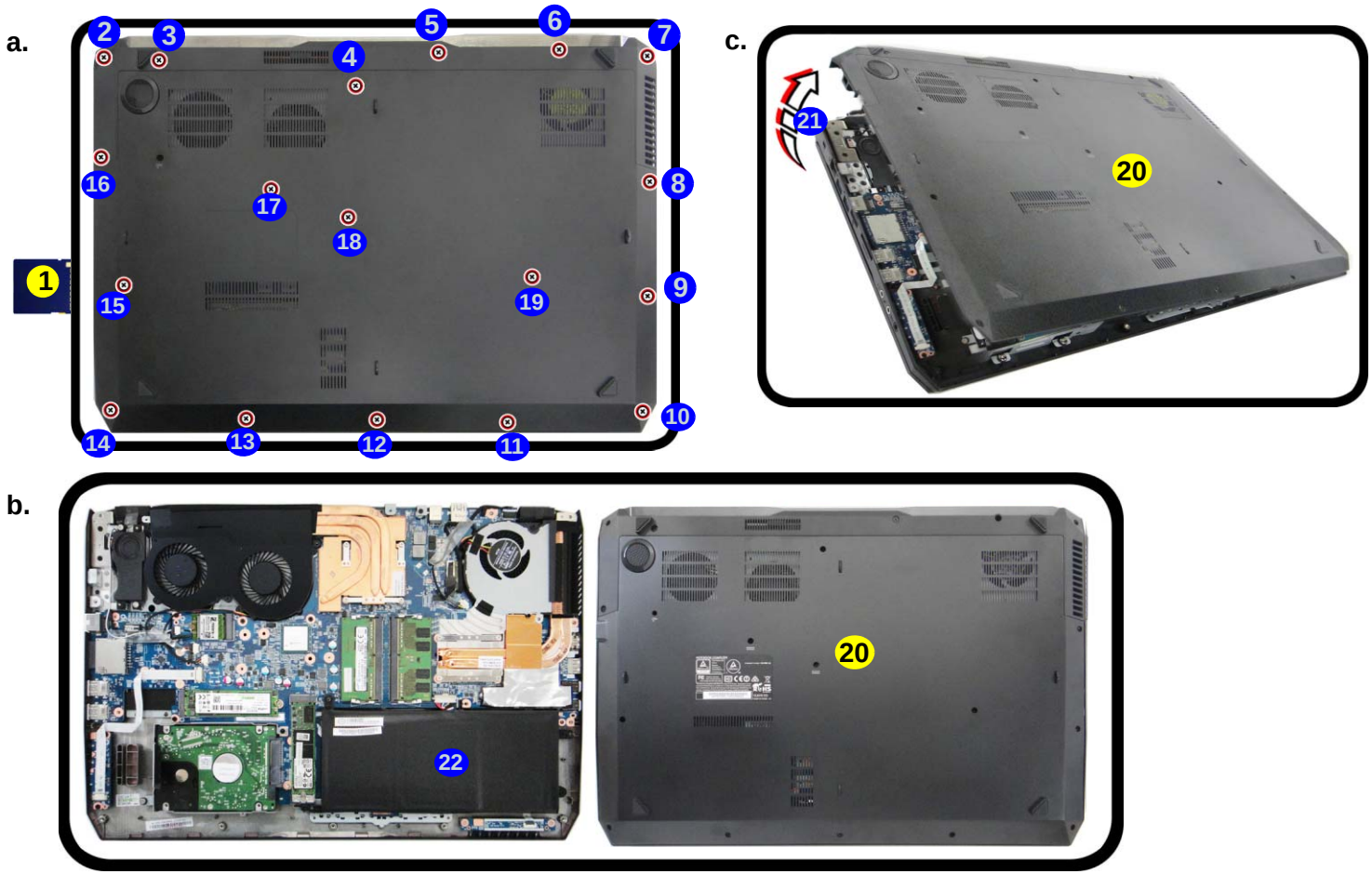

1. SD Card Cover
20. Bottom Case

- 18 Screws

5. Carefully disconnect the cable 23, then remove screws 24 - 27 (*Figure 3d*).
6. Lift the battery 28 off the computer (*Figure 3e*).
7. Reinsert the bottom case starting from point 29 as shown (*Figure 3f*) to avoid damaging the rear eSATA/USB 3.0 port. Tighten the screws to secure the bottom case in place.

Figure 3
Battery Removal (cont'd.)

d. Disconnect the cable and remove the screws.
e. Lift the battery off the computer.
f. Reinsert the bottom case and tighten the screws.

d.

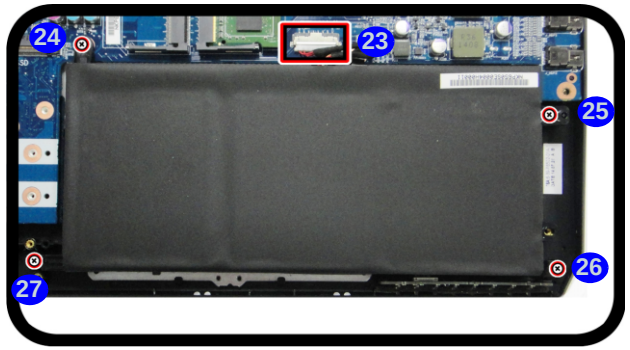

e.

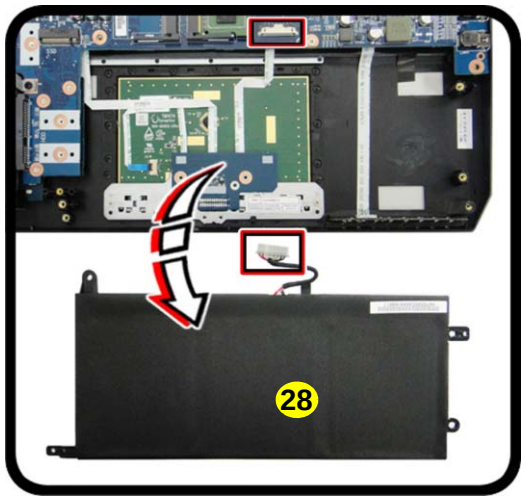

d.

28. Battery

- 4 Screws

Figure 4
HDD Assembly Removal

a. Locate the HDD.
b. Remove the screws.

Removing the Hard Disk Drive

The hard disk drive can be taken out to accommodate other 2.5" serial (SATA) hard disk drives with a height of 9.5mm or 7mm (h). Follow your operating system's installation instructions, and install all necessary drivers and utilities (as outlined in **Chapter 4 of the User's Manual**) when setting up a new hard disk.

Hard Disk Disassembly Process

1. Turn **off** the computer, and remove the battery (***page 2 - 6***).
2. The HDD will be visible at point 1 on the mainboard (***Figure 4a***).
3. Remove screws 2 - 4 from the HDD assembly (***Figure 4b***).

a.

b.

6. Hard Disk

- 3 Screws

HDD System Warning

New HDD's are blank. Before you begin make sure:

You have backed up any data you want to keep from your old HDD.

You have all the CD-ROMs and FDDs required to install your operating system and programs.

If you have access to the internet, download the latest application and hardware driver updates for the operating system you plan to install. Copy these to a removable medium.

4. Carefully pull the hard disk assembly in the direction of arrow 5 (*Figure 5c*).
5. Lift the hard disk assembly 6 out of the bay 7 (*Figure 5d*).
6. Remove screws 8 - 11 and bracket 12 from the hard disk 13 (*Figure 5e*).
7. Reverse the process to install a new hard disk (do not forget to replace the screws).

Figure 5
HDD Assembly Removal (cont'd.)

c. Pull the HDD in the direction of the arrow.
d. Lift the HDD assembly out of the bay.
e. Remove the screws and bracket from the HDD.

c.

d.

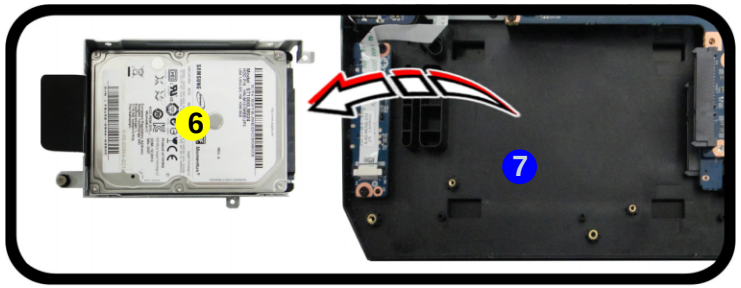

e.

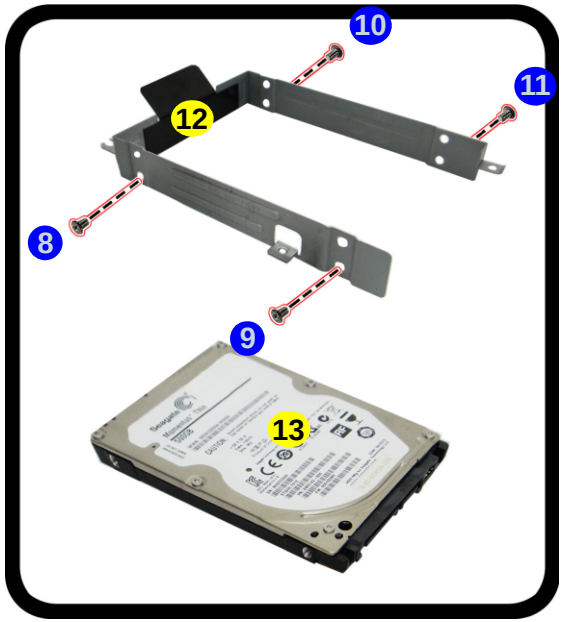

Installing 9.5mm or 7mm HDD

Note that the hard disks pictured on the following pages are all 7mm(h) hard disk drive.

In some cases 9.5mm(h) hard disk drives will be installed. It can be installed on either upper or lower slot.

There are two hard disk drive options:

Two changeable 2.5" (6cm) **7.0mm** (h) **SATA** (Serial) Hard Disk Drives/Solid State Drives (SSD) supporting RAID level 0/1
Or
One changeable 2.5" (6cm) **9.5mm** (h) **SATA** (Serial) Hard Disk Drive/Solid State Drive (SSD)

For more information, contact your distributor/supplier, and bear in mind your warranty terms.

6. HDD Assembly
12. HDD Bracket
13. HDD

- 4 Screws

Figure 6
RAM-1 Module Removal

a. The RAM modules will be visible at point 1.
b. Remove the screws and lift the shielding plate out.

Removing the System Memory (RAM)

The computer has two memory sockets for 204 pin Small Outline Dual In-line Memory Modules (SO-DIMM) supporting DDR4 2133 MHz. The main memory can be expanded up to 64GB. The total memory size is automatically detected by the POST routine once you turn on your computer.

Memory-1 Upgrade Process

1. Turn **off** the computer, turn it over, remove the keyboard (***page 2 - 5***).
2. The RAM modules will be visible at point 1 after removing the shielding plate (***Figure 6a***).
3. Remove screws 2 - 5 and lift the shielding plate 6 off the computer (***Figure 6b***).

a.

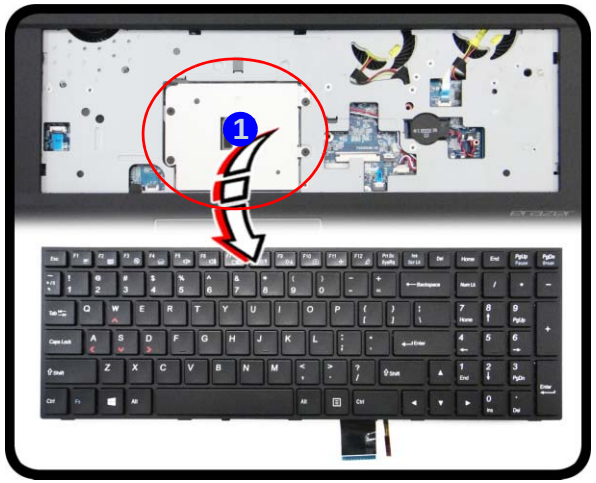

b.

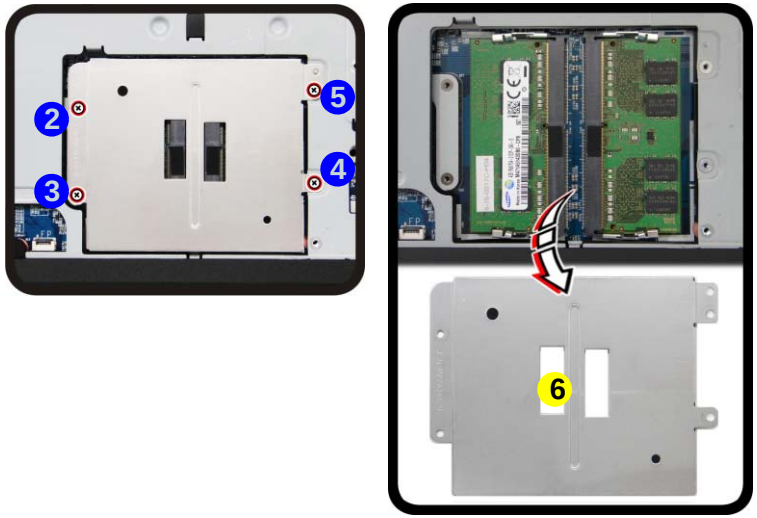

Contact Warning

Be careful not to touch the metal pins on the module's connecting edge. Even the cleanest hands have oils which can attract particles, and degrade the module's performance.

6. RAM Shielding Plate

- 4 Screws

4. Gently pull the two release latches (7 & 8) on the sides of the memory socket in the direction indicated by the arrows (***Figure 8c***). The RAM module 9 will pop-up (***Figure 8d***), and you can then remove it.
5. Pull the latches to release the second module if necessary.
6. Insert a new module holding it at about a 30° angle and fit the connectors firmly into the memory slot.
7. The module will only fit one way as defined by its pin alignment. Make sure the module is seated as far into the slot as it will go. DO NOT FORCE IT; it should fit without much pressure.
8. Press the module in and down towards the mainboard until the slot levers click into place to secure the module.

Figure 7
RAM-1 Module Removal (cont'd)

c. Pull the release latches.
d. Remove the module.

c.

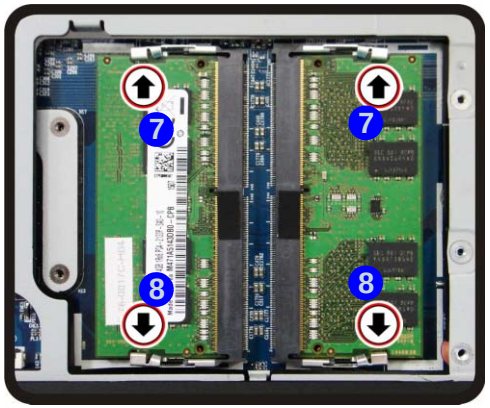

d.

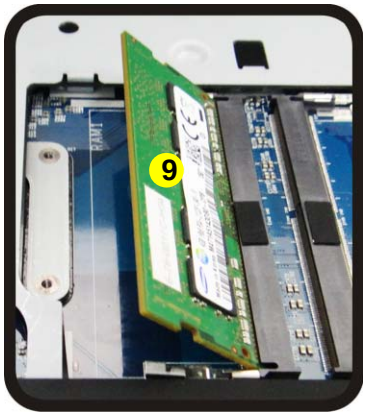

Contact Warning

Be careful not to touch the metal pins on the module's connecting edge. Even the cleanest hands have oils which can attract particles, and degrade the module's performance.

9. RAM Module

Figure 8
RAM-2 Module Removal

a. The RAM modules will be visible at point 1 on the mainboard.
b. Pull the release latches.
c. Remove the module.

Contact Warning

Be careful not to touch the metal pins on the module's connecting edge. Even the cleanest hands have oils which can attract particles, and degrade the module's performance.

4. RAM Module

Memory-2 Upgrade Process

1. Turn **off** the computer, turn it over, remove the battery (***page 2 - 6***).
2. The RAM-2 modules will be visible at point 1 on the mainboard (***Figure 8a***).
3. Gently pull the two release latches (2 & 3) on the sides of the memory socket in the direction indicated by the arrows (***Figure 8b***). The RAM module 4 will pop-up (***Figure 8c***), and you can then remove it.
4. Pull the latches to release the second module if necessary.
5. Insert a new module holding it at about a 30° angle and fit the connectors firmly into the memory slot.
6. The module will only fit one way as defined by its pin alignment. Make sure the module is seated as far into the slot as it will go. DO NOT FORCE IT; it should fit without much pressure.
7. Press the module in and down towards the mainboard until the slot levers click into place to secure the module.
8. Replace the bottom cover and the screws (see ***page 2 - 6***).
9. Restart the computer to allow the BIOS to register the new memory configuration as it starts up.

a.

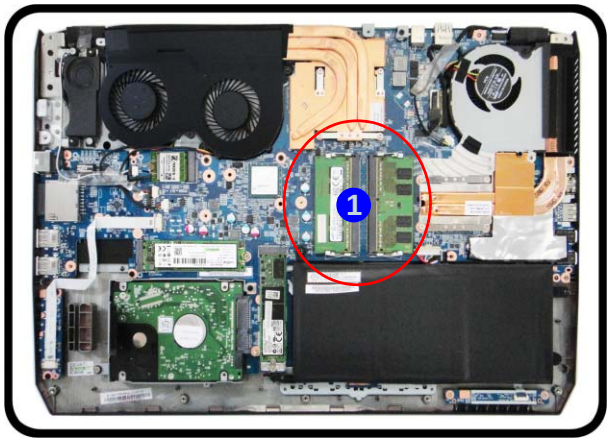

b.

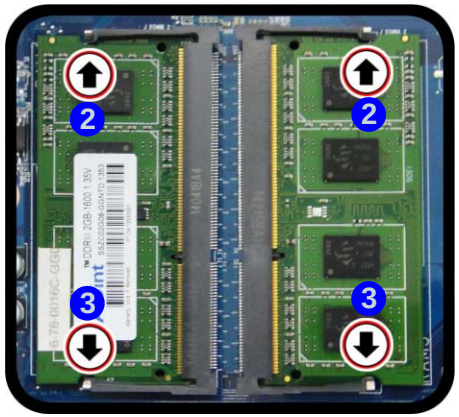

c.

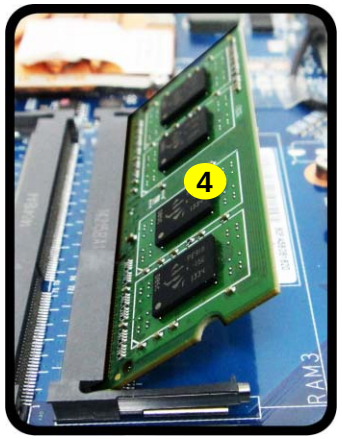

Removing and Installing the the M.2 SSD Module

M.2 SSD-1 Removal Procedure

1. Turn **off** the computer, turn it over, remove the battery (***page 2 - 6***).
2. The SSD module will be visible at point 1 on the mainboard (***Figure 9a***).
3. Remove the screw 2 (***Figure 9b***)
4. The SSD module 3 (***Figure 9c***) will pop-up, and you can remove it from the computer.

Figure 9
M.2 SSD-1 Module Removal

a. Locate the SSD.
b. Remove the screw.
c. The SSD module will pop up.

a.

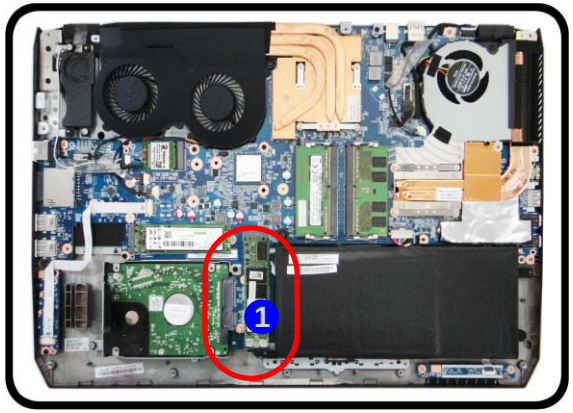

b.

c.

3.SSD Module

- 1 Screw

Figure 10
M.2 SSD-2 Module Removal

a. Locate the module.
b. Disconnect the cables and remove the screw.
c. The module will pop-up.
d. Lift the module up off the socket.

M.2 SSD-2 Removal Procedure

1. Turn **off** the computer, remove the battery (***page 2 - 6***).
2. Locate the module, it is visible at point 1 (***Figure 10a***).
3. Remove the screw 2 from the module (***Figure 10b***).
4. The module 3 will pop-up (***Figure 10c***).
5. Lift the module 3 up and off the computer (***Figure 10d***).
6. Reverse the process to install a new module.

a.

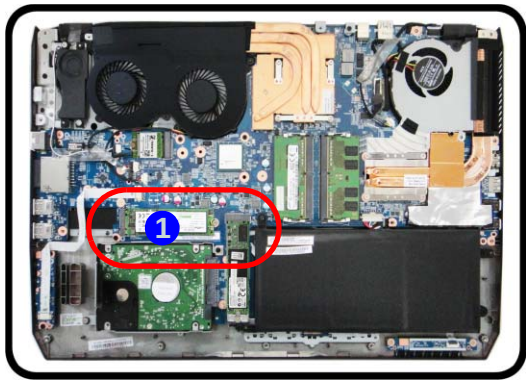

b.

c.

d.

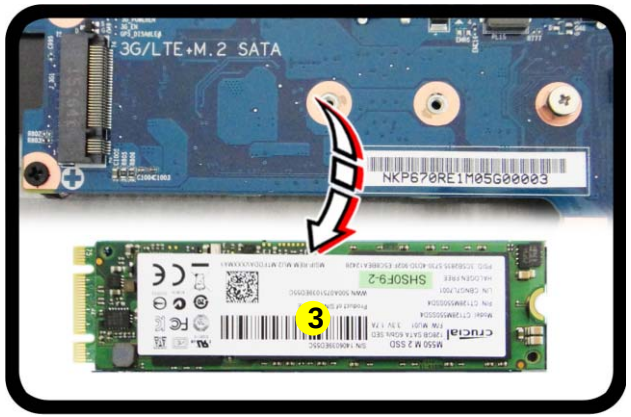

3. M2 SATA Module

- 1 Screw

M.2 SSD-2 Installation Procedure

1. Place the thermal pad (1) on the module as shown (***Figure 11a***).
2. Insert the module (2) in the computer (***Figure 11b***).
3. Tighten the screw (3) to secure it in place (***Figure 11c***).

Figure 11
M.2 SSD-2 Module Installation

a. Place the thermal pad.
b. Insert the module.
c. Tighten the screw.

a.

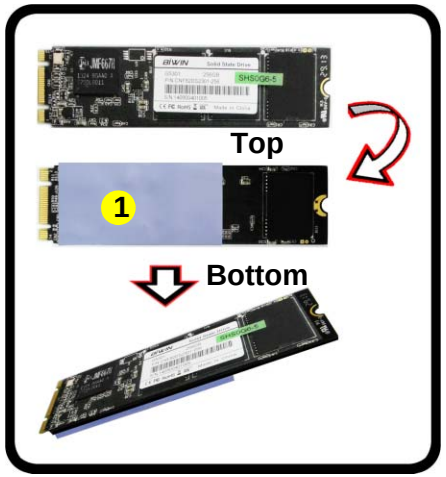

b.

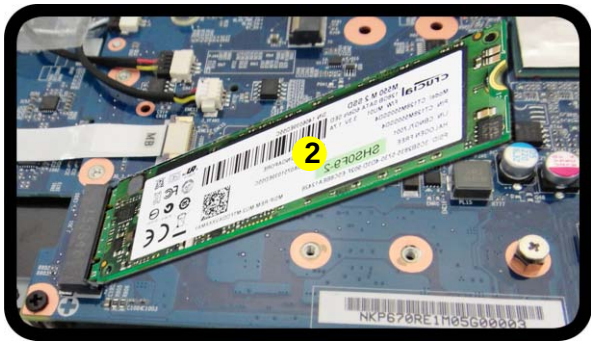

c.

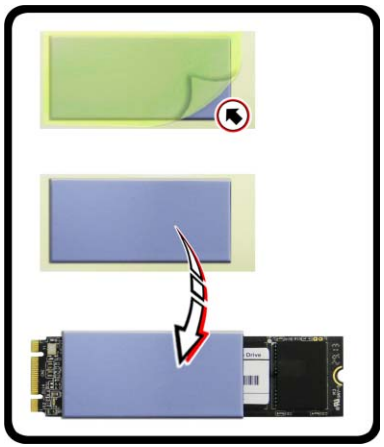

Thermal Pad

Be sure to place the thermal pad's adhesive side down onto the module surface as shown.

1. Thermal Pad
2. M2 SATA Module

- 1 Screw

Figure 12
M.2 SSD-2 Module Installation (cont'd)

d. Place the mylar and thermal pad as shown.

4. Press down the mylar 4 and thermal pad 5 into place at point 6 as shown (***Figure 12d***).
5. Make sure that the mylar is secure in place 7 and the thermal pad is in place along the contour 8 (no glue is required).
6. Replace the component bay cover and tighten the screws.

d.

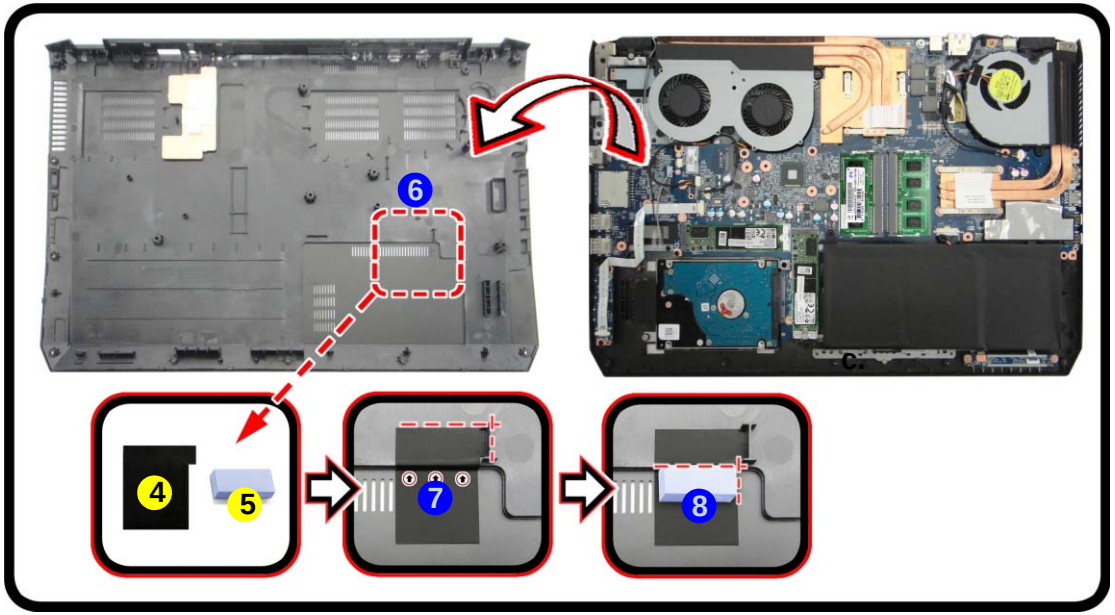

4. Mylar
5. Thermal Pad

Removing the Wireless LAN Module

1. Turn **off** the computer, turn it over, remove the battery (***page 2 - 6***).
2. The Wireless LAN module will be visible at point 1 on the mainboard (***Figure 13a***).
3. Carefully disconnect the cables 2 & 3, and then remove the screw 4 (***Figure 13b***)
4. The Wireless LAN module 5 (***Figure 13c***) will pop-up, and you can remove it from the computer.

a.

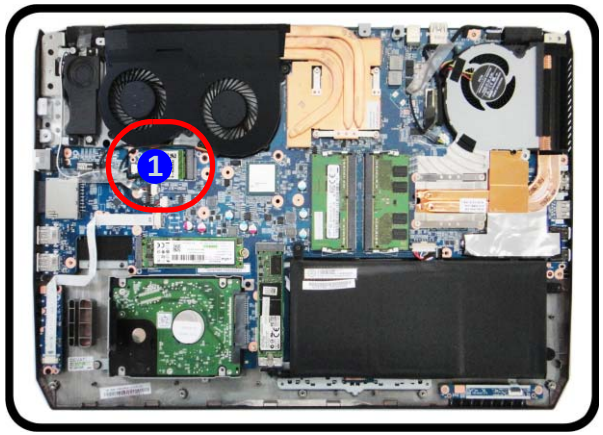

b.

c.

Figure 13
Wireless LAN Module Removal

a. Locate the WLAN.
b. Disconnect the cables and remove the screw.
c. The WLAN module will pop up.

Note: Make sure you reconnect the antenna cable to the “1 + 2” socket (***Figure 13b***).

5.Wireless LAN Module

- 1 Screw

Wireless LAN, Combo, 3G & LTE Module Cables

Note that the cables for connecting to the antennae on WLAN, WLAN & Bluetooth Combo, 3G and LTE modules are not labelled. The cables/covers (each cable will have either a black or transparent cable cover) are color coded for identification as outlined in the table below.

Module Type	Antenna Type	Cable Color	Cable Cover Type
WLAN/WLAN & Bluetooth Combo	WM 1	Black	Transparent
	WM 2	Gray	
	WM 3	White	
LTE Broadband	LTE 1	Black	Black
	LTE 2	Gray	
3G Broadband	3G 1	Black	Black
	3G 2	Gray	

Cable 1 is usually connected to antenna 1 (Main) on the module, and cable 2 to antenna 2 (Aux).

Removing the M.2 SATA Module

M.2 SATA-1 Removal Procedure

1. Turn **off** the computer, remove the battery (*page 2 - 6*).
2. Locate the module, it is visible at point 1 (*Figure 14a*).
3. Carefully remove the screw 2 from the module (*Figure 14b*).
4. The module 3 will pop-up (*Figure 14c*).
5. Lift the module 3 up and off the computer (*Figure 14d*).
6. Reverse the process to install a new module.

Figure 14
M.2 SATA-1 Module Removal

a. Locate the module.
b. Remove the screw.
c. The module will pop-up.
d. Lift the module up off the socket.

a.

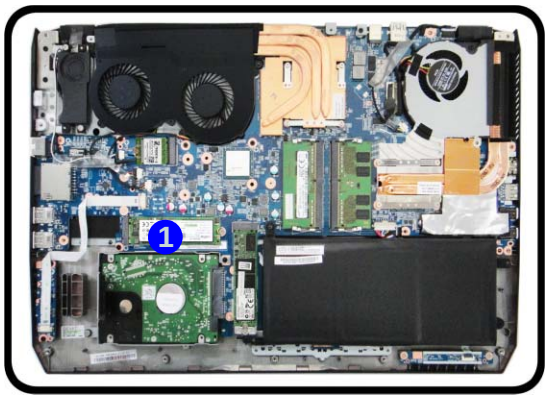

b.

c.

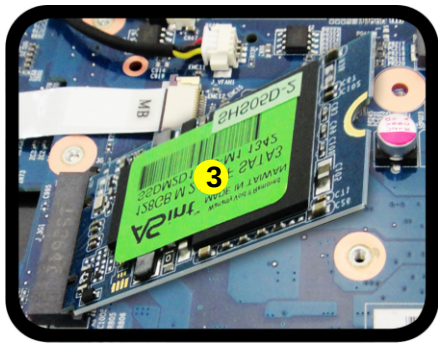

d.

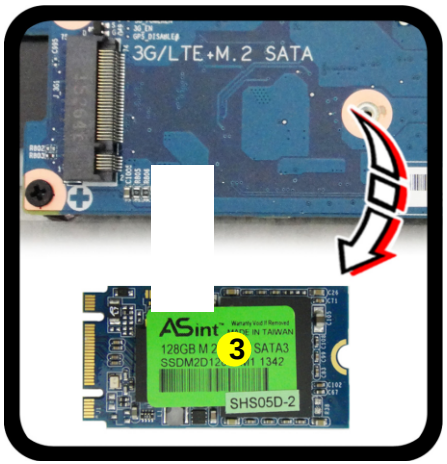

3. M2 SATA Module

- 1 Screw

Figure 15
M.2 SATA-2 Module Removal

a. Locate the module.
b. Disconnect the cables and remove the screw.
c. The module will pop-up.
d. Lift the module up off the socket.

M.2 SATA-2 Removal Procedure

1. Turn **off** the computer, remove the battery (***page 2 - 6***).
2. Locate the module, it is visible at point 1 (***Figure 15a***).
3. Remove the screw 2 from the module (***Figure 15b***).
4. The module 3 will pop-up (***Figure 15c***).
5. Lift the module 3 up and off the computer (***Figure 15d***).
6. Reverse the process to install a new module.

a.

b.

c.

d.

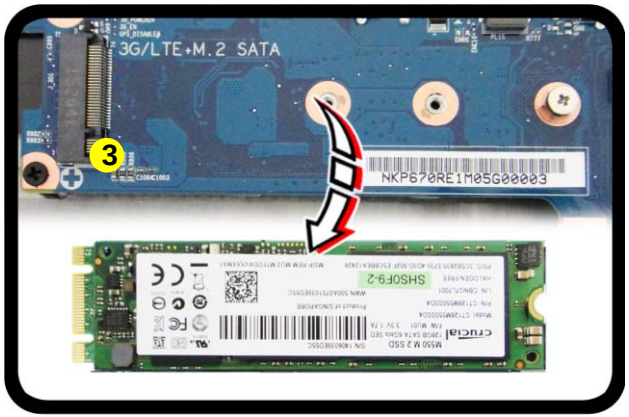

3. M2 SATA Module

- 1 Screw

Appendix A:Part Lists

This appendix breaks down the ***P670RG*** series notebook's construction into a series of illustrations. The component part numbers are indicated in the tables opposite the drawings.

Note: This section indicates the *manufacturer's* part numbers. Your organization may use a different system, so be sure to cross-check any relevant documentation.

Note: Some assemblies may have parts in common (especially screws). However, the part lists DO NOT indicate the total number of duplicated parts used.

Note: Be sure to check any update notices. The parts shown in these illustrations are appropriate for the system at the time of publication. Over the product life, some parts may be improved or re-configured, resulting in *new* part numbers.

Part List Illustration Location

The following table indicates where to find the appropriate part list illustration.

Table A - 1
Part List Illustration Location

Part	
Top	*page A - 3*
Bottom	*page A - 4*
MB	*page A - 5*
HDD	*page A - 6*
LCD	*page A - 7*

Top

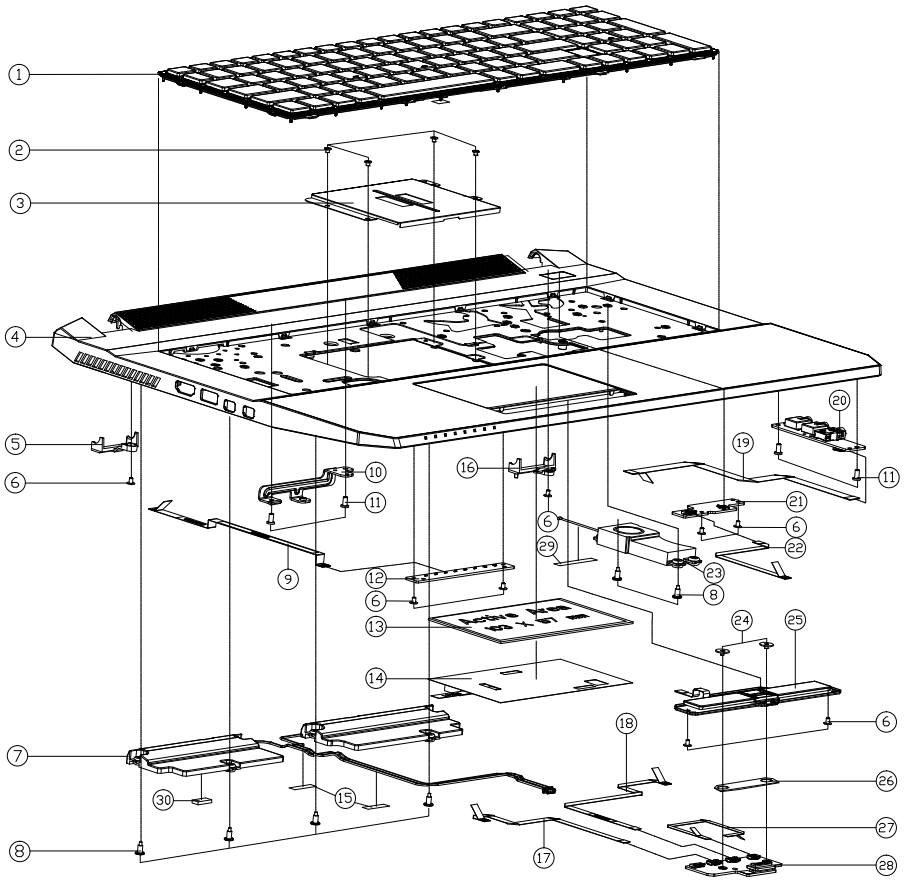

ITEM	PART NAME	PART NO	REMARK
1	WHITE BL KB USA NP-13H83UCAC4B0 P650SE BLACK ISOLATION WITH WINB KEY + K/B FRAME	6-80-P6500-013-1	
2	SCREW M2*2L KI BK/Z ICT NY (Ø6,T=0.5)	6-35-B6120-2RC	
3	DDR BRACKET (SUS304) P650SE	6-33-P6502-050	
4	TOP CASE MODULE (INKY)(KAPD)(XCHANGE) P670SG	6-39-P6702-013-N	
5	HINGE COVER L (SABIC C7230P-BK1C340) P670SG	6-42-P6702-0L1	
6	SCREW M2*3L KI NI ICT NY (DD=Ø4.5,DT=0.4)	6-35-B1120-3RE	
7	SPK+CABLE FRONT RAL 51X20 T5.2 2W 4? EE0922SN L=236.5MM R=230.0MM P650SE	6-23-5P650-0S1	
8	SCREW M2*6.2L NI ICT NY FOR SPEAKER	6-35-Z1120-6R2	
9	FFC CABLE LED TO MB (P=0.5) 155MM 60V 12PIN P670SG	6-43-P6700-041	
10	TOP BKT L2 SECC , T=1 MM P670SG	6-33-P6702-1L1	
11	SCREW M2.5*5L KI BK/Z ICT NY	6-35-B6125-5RA	
12	LED BOARD V1.0 P670RE6	6-77-P67R4-D01	
13	TOUCH PAD SYNAPTICS TM-03163-001 P750DM (108*61MM)	6-49-P75D3-010	
14	TP MYLAR PET P670RG	6-40-P67R2-011	
15	TAPE MYLAR TRANSPARENT (20*10*0.05) P180HM	6-40-P1803-020	
16	HINGE COVER R (SABIC C7230P-BK1C340) P670SG	6-42-P6702-0R1	
17	FFC CABLE FINGER TO MB (P=1.0) 92MM 60V 4PIN P670SG	6-43-P6700-050	ONLY FOR FINGER
18	FFC CABLE TRANSFER TO MB (P=0.5) 191.5MM 60V 6PIN P670RE6	6-43-P67R0-011	
19	FFC CABLE AUDIO TO MB (P=0.5) 108MM 60V 15PINP670SG	6-43-P6700-070	
20	AUDIO BOARD V2.0 P650RE6	6-77-P65R8-D02	
21	POWER BOARD V1.0 P650RE6	6-77-P65RC-D01	
22	FFC CABLE POWER TO MB (P=1.0) 72MM 60V 4PIN P670SG	6-43-P6700-031	
23	SPK+CABLE SUBWOOFER 26.6Ø41 2.5W 4? 145MM NO GASKET PM25B0A P15DEW	6-23-5P15E-0W3	
24	SCREW M2*2L KI BK/Z ICT NY(Ø8,T=0.6)	6-35-B6120-2RE	
25	FUNCTION KEY FOR CLICK BUTTON MODULE W/O FINGER P650RE6	6-23-KP65R-022	FOR W/O FINGER
25	FUNCTION KEY FOR CLICK BUTTON MODULE W/FINGER P650RE6	6-23-KP65R-012	FOR W/FINGER
26	CLICK W/O FP MYLAR PET (48*14*0.5T) P650SE	6-40-P6502-080	ONLY FOR W/O FINGER
27	FFC CABLE TP TO CLICK (P=0.5) 101.8MM 60V 8PIN P650RE6	6-43-P65R0-021	
28	CLICK BOARD V2.0 (W/FP)+FINGER SENSOR BOARD V1.0B P650RE6	6-77-P65RA-N02	FOR W/FINGER
28	CLICK BOARD V2.0 (W/O FP) P650RE6	6-77-P65R2-D02-1	W/O FINGER
29	TAPE MYLAR (C),MYLAR M550J	6-40-M55J2-030	
30	RUBBER 10*5*2.7T FOR P670SG	6-47-00120-270	

Figure A - 1
Top

Bottom

Figure A - 2
Bottom

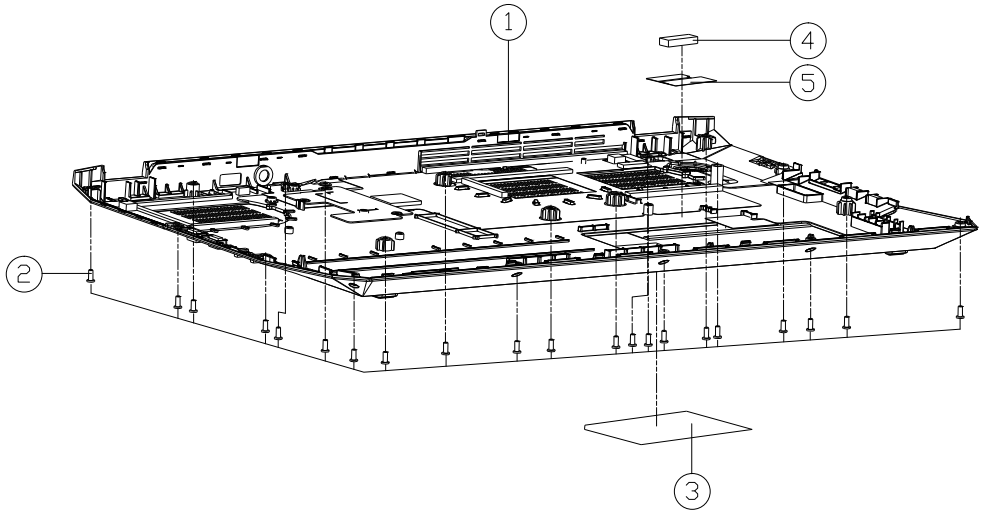

ITEM	PART NAME	PART NO	REMARK
1	6PKE-PROCESS ID COVER KING+BOTTOM CASE+6A0GETMOR BOTTOM FOIL MODULE P670RG	6-78-P670RG03-010	
1	6PKE-PROCESS ID COVER KING+BOTTOM CASE+6A0GETMOR BOTTOM FOIL MODULE P671RG	6-78-P671RG03-010	
2	SCREW M2.5*6L K BZ ICT NY	6-35-82125-6RA	
3	PRODUCT LABEL FOR P670RE6	6-45-P670RE63-010	
3	PRODUCT LABEL FOR P671RE6	6-45-P671RE63-010	
3	PRODUCT LABEL FOR P670RE6-G	6-45-P670RE6G-010	
3	PRODUCT LABEL FOR P671RE6-G	6-45-P671RE6G-010	
3	PRODUCT LABEL FOR P670RE3	6-45-P670RE33-010	
3	PRODUCT LABEL FOR P671RE3	6-45-P671RE33-010	
3	PRODUCT LABEL FOR P670RE3-G	6-45-P670RE3G-010	
3	PRODUCT LABEL FOR P671RE3-G	6-45-P671RE3G-010	
3	PRODUCT LABEL FOR P670RG(CHANGE RATING)	6-45-P670RG03-011	
3	PRODUCT LABEL FOR P670RG-G(CHANGE RATING)	6-45-P670RGG3-011	
3	PRODUCT LABEL FOR P671RG(CHANGE RATING)	6-45-P671RG03-011	
3	PRODUCT LABEL FOR P671RG-G(CHANGE RATING)	6-45-P671RGG3-011	
3	PRODUCT LABEL FOR P670RA	6-45-P670RA03-010	
3	PRODUCT LABEL FOR P671RA	6-45-P671RA03-010	
4	THERMAL PAD MA500 (21X8.5X4T)MM FOR M-SATA	6-48-P6703-011	ONLY FOR SSD
5	MYLAR FOR SSD 33*25*0.15 (MYLAR+ADHESIVE)	6-40-P6703-021	ONLY FOR SSD

MB

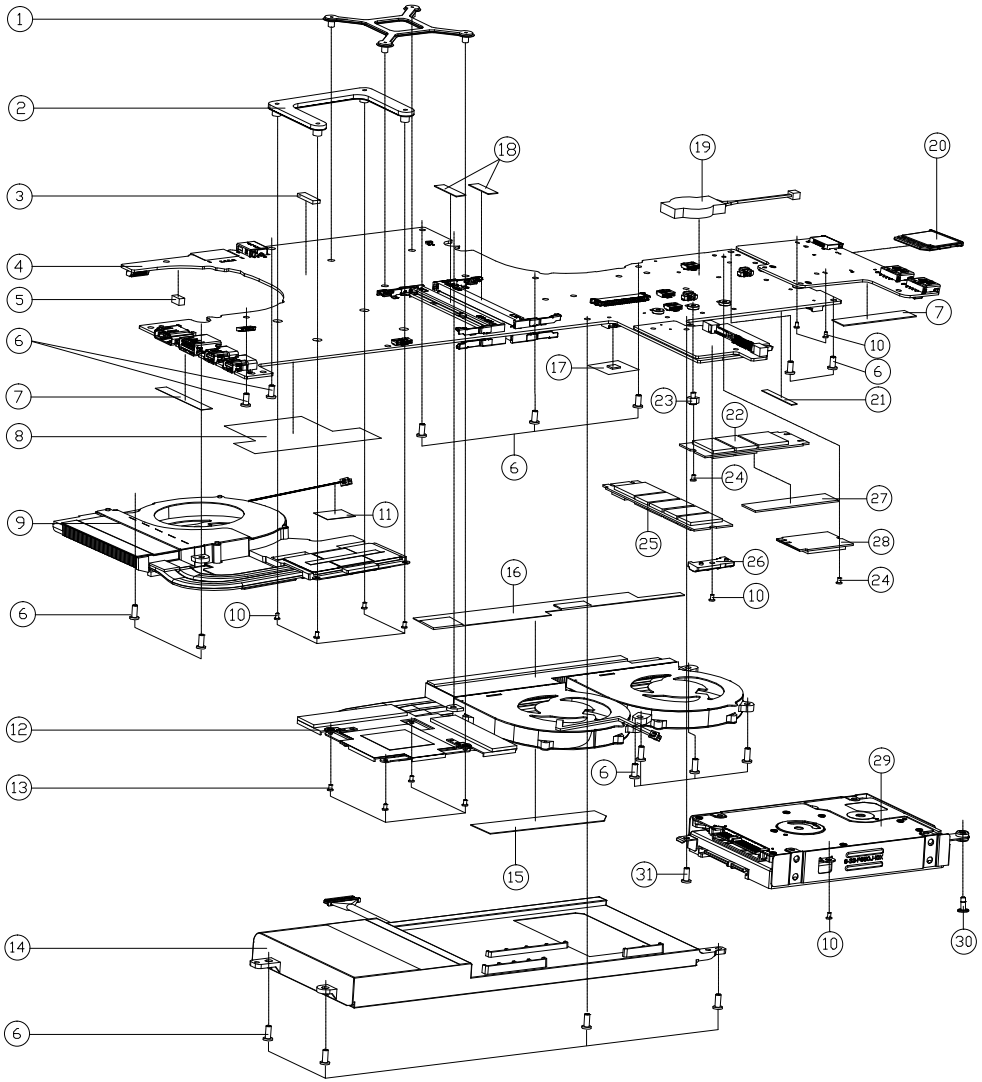

ITEM	PART NAME	PART NO	REMARK
1	VGA SUPPORTER SUS430 X720DXXIESHOLD X7200	6-33-X720S-040-1	
2	CPU SUPPORT BRACKET SECC T=1.5 P150HM	6-33-X510S-011	
3	RUBBER MB (SILICON 60 DEGREE) P650SE	6-47-P6502-030	
4	[illegible]	6-77-P670RG0A-N03-A	
4	[illegible]	6-77-P670RG0A-N03-1B	
4	[illegible]	6-77-P670RGGA-N03-A	
4	[illegible]	6-77-P670RGGA-N03-1B	
4	[illegible]	6-77-P670RG0M-N03-A	
4	[illegible]	6-77-P670RG0M-N03-1B	
4	[illegible]	6-77-P670RG1M-N03-1A	
4	[illegible]	6-77-P670RG1M-N03-B	
5	RUBBER (6*3*4T) SILICONE P670SG	6-47-P6702-030	
6	SCREW M2.5*5L KI BK/Z ICT NY	6-35-B6125-5RA	
7	TAPE MYLAR (C),MYLAR M550J	6-40-M55J2-030	
8	EMI SOL ON MB AL FOIL+PET 42.9*76.2 P650SE	6-47-P650S-020	
9	CPU HEATSINK MODULE(DIA CASTING+FAN MODULE) P650RG	6-31-P65R2-G01	
10	SCREW M2*3L KI NI ICT NY (DD=#4.5,DT=0.4)	6-35-B1120-3RE	
11	TAPE MYLAR TRANSPARENT (20*10*0.05) P180HM	6-40-P1803-020	
12	GPU HEATSINK MODULE & FAN MODULE P650SG	6-31-P6502-G02	
13	SCREW M1.6*3.5L K(T=1.2 D=4.5) BZ ICT NY	6-35-82116-3R5	
14	[illegible]	6-87-P650S-4252	
14	[illegible]	6-87-P650S-4U31	
15	VGA MYLAR (PET MYLAR(0.15T) + G4000) P670SE	6-40-P6702-050	
16	VGA KSK MYLAR (PET MYLAR(0.25) + (DX382(0.5T) + 3M 467) P670SG	6-40-P6702-040	
17	AL FOIL+THERMAL PAD 20*20 P650SE	6-40-P650S-020	
18	DDR4 SOCKET RUBBER(10.8*5) SILICONE P650REG	6-47-P65RS-011	
19	BAT. 20MM 3V 220MAH W/CABLE 55MM BC0202W5.5MMGB	6-23-22015-TC0	
20	DUMMY SD PSH PUSH TYPE PC+ABS (C7230P-7010E) W9705JW	6-42-W9708-010	
21	TAPE MYLAR TRANSPARENT (30*5*0.05) W251HPQ	6-40-W25P3-010	
22	M2 (2280MM) SATA 3 SSD 240GB SSD030NA240MXXX DWEL S20 SERIES)	6-85-D40Q0-Z02	OPTION
23	SCREW M2*2L (F=2.5 H=3) STEEL ICT NY FOR NGFF CARD(NAME MATERIAL)	6-35-ZA120-2R5	
24	SCREW M2*2L KI NI ICT NY (DD=#5 ,T=0.5)	6-35-B1120-2R0	
25	SSD M2 2280 256GB LITE-ON (L6T-256LP) (PCIE G2*2) (MLC)	6-85-D51R6-L00	OPTION
25	SSD M2 2280 512GB SAMSUNG MZVPV512HDGL-00000 (OMP5X) PCIE G3*4 MLC	6-85-D515B-S00	OPTION
25	SSD M2 2280 256GB LITE-ON (L8H-256V2G) SATA3 MLC (V2 SERIES)	6-85-D51R6-L01	OPTION
25	SSD M2 2280 500GB CRUCIAL CT500MX200SSD4 (MX200) SATA3 MLC	6-85-D515A-100	OPTION
25	SSD M2 2280 256GB CRUCIAL CT256MX200SSD4 (MX200) SATA3 MLC	6-85-D51R0-100	OPTION
25	SSD M2 2280 256GB PLEXTOR (M6M(G)256GM(V)(N)-2H (7A) SATA3 SATA3 MLC (S3 SERIES)	6-85-D51R6-H00	OPTION
25	SSD M2 2280 128GB SAMSUNG MZ-N17S128 REV 0 (7/W)(TC)(N) SATA3 MLC 9.5TB WE(DWPD)	6-985-N17SD-001-M	OPTION
25	SSD M2 2280 512GB SAMSUNG MZ-N6E512 F(W)(N)(B)(C)(A)-BW00 (PM871) SATA3 9.5TB WE(DWPD)	6-985-D515B-S01-M	OPTION
25	SSD M2 2280 256GB SAMSUNG MZNLN256HMJP-000H1 (PM871) SATA3 REV 0 9.5TB WE(DWPD)	6-985-D51R6-S01-M	OPTION
26	NGFF SUPPORT 4H (ABS PA-727) P650SE	6-42-P650J-031	
27	THERMAL PAD MR500 (44*23*1.5TMM) FOR M-SATA P650SE	6-48-P650S-030	
28	[illegible]	6-88-N25JF-4200	OPTION
28	[illegible]	6-88-W95LF-4240	OPTION
28	[illegible]	6-88-N240F-4200	OPTION
28	[illegible]	6-88-P75DF-9600	OPTION
28	[illegible]	6-88-S210F-9400	OPTION
28	[illegible]	6-88-N170F-5100	OPTION
29	W/O HDD ASS'Y P670SG	6-79-P670SG0J-010	
29	W/HDD ASS'Y P670SG	6-79-P670SG0J-020	
29	W/O 2ND HDD ASS'Y P670SG	6-79-P670SG0J-030	
29	W/ 2ND HDD ASS'Y P670SG	6-79-P670SG0J-040	
30	SCREW M2*6.2L NI ICT NY FOR SPEAKER	6-35-Z1120-6R2	FOR P650SE *3 FOR P650SG *1
31	SCREW M2.5*6L K BZ ICT NY	6-35-82125-6RA	

Figure A - 3
MB

A.Part Lists

HDD

Figure A - 4
HDD

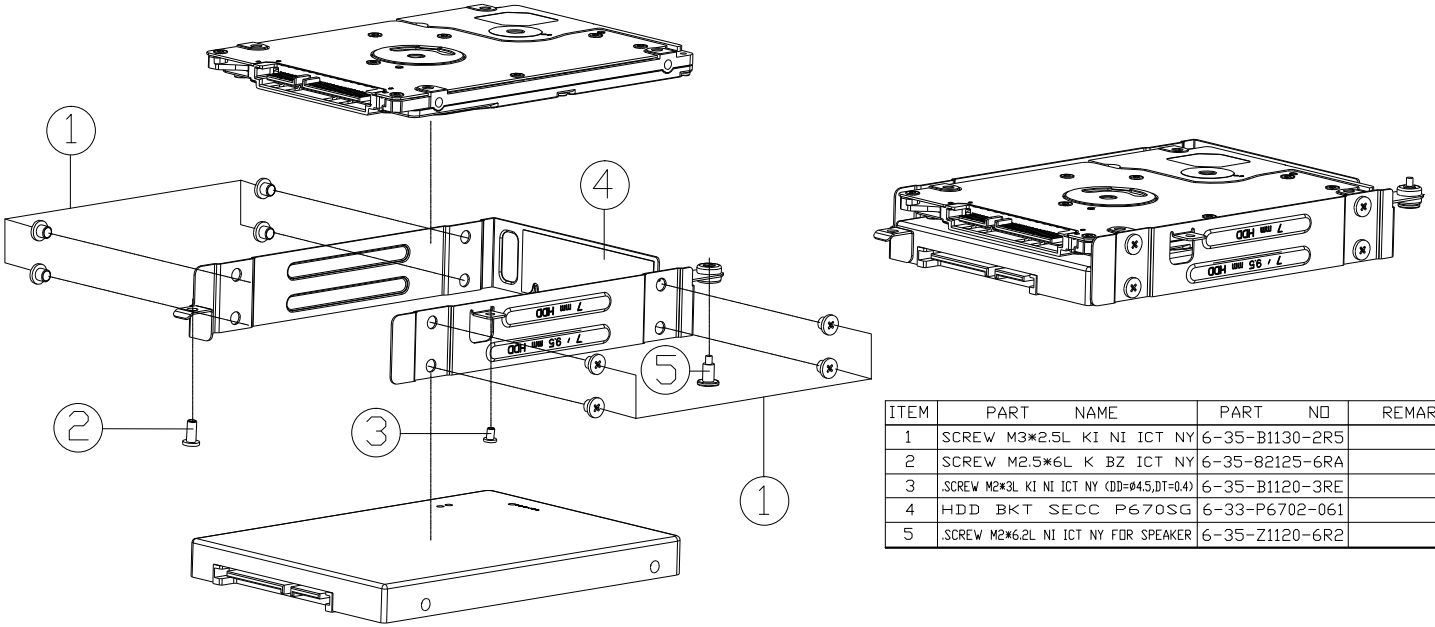

ITEM	PART NAME	PART NO	REMARK
1	SCREW M3*2.5L KI NI ICT NY	6-35-B1130-2R5	
2	SCREW M2.5*6L K BZ ICT NY	6-35-82125-6RA	
3	.SCREW M2*3L KI NI ICT NY (DD=Ø4.5,DT=0.4)	6-35-B1120-3RE	
4	HDD BKT SECC P670SG	6-33-P6702-061	
5	.SCREW M2*6.2L NI ICT NY FOR SPEAKER	6-35-Z1120-6R2	

LCD

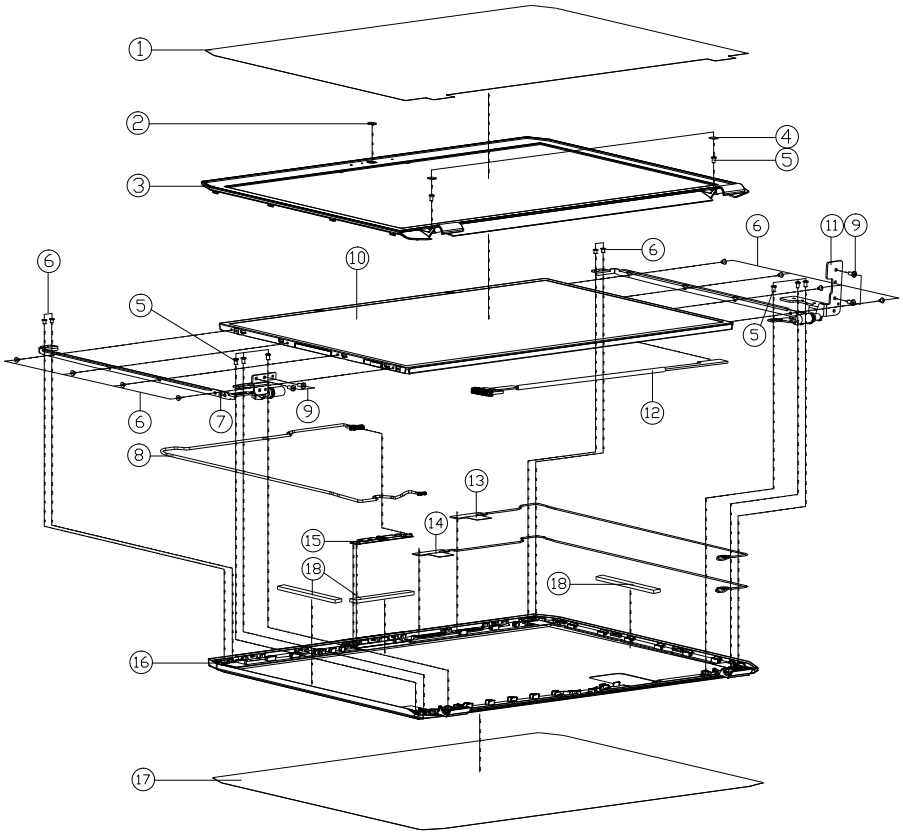

ITEM	PART NAME	PART NO	REMARK
1	LCD FRONT COVER PROTECTIVE MYLAR (PET+3M8915) P670SG	6-40-P6708-020	
2	LCD CCD LENS PMMA P177SM (ELAYNE)	6-42-P177T-010-1	
3	LCD FRONT COVER MODULE(CHANGE) P670SG	6-39-P6701-013	
4	RUBBER FRONT COVER SCREW SILICONE W970SUW	6-47-W9701-041	
5	SCREW M2.5*4L K1 BK/O ICT NY	6-35-B4125-4RA	
6	SCREW M2*3L KI NI ICT NY (DD=Ø4.5,DT=0.4)	6-35-B1120-3RE	
7	HINGE L (SECC+SK7) P670SG	6-33-P6701-0L0	
7	HINGE A-TYPE L (SGCC+SK7) P670SG	6-33-P6701-1L0	
7	HINGE B-TYPE L (SGCC+SK7) P670SG	6-33-P6701-2L0	
8	WIRE CALBE FOR CCD 580MM 30V 8PIN (CMI) P670SE	6-43-P670T-010-1	
9	SCREW M2.5*5L KI BK/Z ICT NY	6-35-B6125-5RA	
10	LCD 17.3" FHD (EDP) CHIMEI N173HGE-E11(LED) 6.0 MM	6-50-NB260-D03	
10	LCD 17.3" FHD AU B173HW02 V1(LED) 6.0 MM	6-50-NB260-G04	
10	LCD 17.3" FHD CHIMEI N173HGE-L11 (LED) 6.0 MM	6-50-NB260-D01	
10	LCD 17.3" FHD / IPS / EDP LG LP173WF4-SPB1 " SUPPORT 3/V G-SYNC " (LED) 6.2MM	6-50-NB262-L00	
11	HINGE R (SECC+SK7) P670SG	6-33-P6701-0R0	
11	HINGE A-TYPE R (SGCC+SK7) P670SG	6-33-P6701-1R0	
11	HINGE B-TYPE R (SGCC+SK7) P670SG	6-33-P6701-2R0	
12	WIRE CABLE FOR EDP 405MM 30V 30P (CMI/THL CONHLX09008) P670SG	6-43-P6701-022-1C	
12	WIRE CABLE FOR LVDS 411.5MM 30V 40P (CMI/THL CONHLX09002) P670SG	6-43-P6701-012-1C	
12	WIRE CABLE FOR LVDS 411.5MM 30V 40P (HL/LW CONLVI0340-212) P670SG	6-43-P6701-012-N	
13	ANTENNA WLAN WGT WL2 PCB 2.4G/5G IPEX4 L=600MM BLACK CABLE P670SE	6-23-7P650-021	
14	ANTENNA WLAN WGT WL1 PCB 2.4G/5G IPEX4 L=650MM P650SE	6-23-7P650-011	
15	IVC CAMERA BOON FOX DMBVB0VH-B20 2M FHD s5m OV2724 P650SE FW685 W/LED W/array NIC	6-88-P650C-4900	OPTION
16	LCD BACK COVER MODULE P670SG	6-39-P6701-022	
16	LCD BACK COVER MODULE (FOR ALL LCD) P670SG	6-39-P6701-120	
17	LCD BACK COVER PROTECTIVE MYLAR (PET+3M8915) P670SG	6-40-P6708-010	
18	SPONGE (CR2030+G4000) 65*6*3T FOR LCD B-TYPE P670SG	6-47-0019A-659	ONLY FOR IPS/EDP

Figure A - 5
LCD

Appendix B: Schematic Diagrams

This appendix has circuit diagrams of the ***P670RG*** notebook's PCB's. The following table indicates where to find the appropriate schematic diagram.

Diagram - Page	Diagram - Page	Diagram - Page	Diagram - Page
System Block Diagram - Page B - 2	*GPU Frame Buffer Partition - Page B - 24*	*Realtek ALC892 - Page B - 46*	*P650RE HDD Board - Page B - 68*
Processor 1/7 - Page B - 3	*Frame Buffer Partition C - Page B - 25*	*TPA2008D2 - Page B - 47*	*P650RE LED Board - Page B - 69*
Processor 2/7 - Page B - 4	*Frame Buffer Partition D - Page B - 26*	*Subwoofer - Page B - 48*	*Finger Sensor Board - Page B - 70*
Processor 3/7 - Page B - 5	*Frame Buffer Partition C_D - Page B - 27*	*KBC-ITE IT8587 - Page B - 49*	*P650RE Click Board - Page B - 71*
Processor 4/7 - Page B - 6	*GPU Decoupling - Page B - 28*	*TPM, CCD, TP - Page B - 50*	*P650RE USB Board 1/3 - Page B - 72*
Processor 5/7 - Page B - 7	*DACA Interface & XTAL - Page B - 29*	*Fan, LID, KB, LED - Page B - 51*	*P650RE USB Board 2/3 - Page B - 73*
Processor 6/7 - Page B - 8	*IFP I/O Interface - Page B - 30*	*Connector - Page B - 52*	*P650RE USB Board 3/3 - Page B - 74*
Processor 7/7 - Page B - 9	*Misc - GPIO, I2C and ROM - Page B - 31*	*DDR 1.2V / 0.6VS - Page B - 53*	*P670RE USB Board 1/3 - Page B - 75*
DDR4 CHA SO-DIMM_0 - Page B - 10	*GPU NVVDD, FBVDDQ, and GND - Page B - 32*	*VDD3, VDD5 - Page B - 54*	*P670RE USB Board 2/3 - Page B - 76*
DDR4 CHA SO-DIMM_1 - Page B - 11	*PCH 1/9 - Page B - 33*	*5V, 5VS, 3.3V, 3.3VS, 3.3VA - Page B - 55*	*P670RE USB Board 3/3 - Page B - 77*
DDR4 CHB SO-DIMM_0 - Page B - 12	*PCH 2/9 - Page B - 34*	*Power 1.0V, VCCIO - Page B - 56*	*P670RE LED Board - Page B - 78*
DDR4 CHB SO-DIMM_1 - Page B - 13	*PCH 3/9 - Page B - 35*	*AC_In, Charger - Page B - 57*	*P655RE Power Board - Page B - 79*
Panel, Inverter, CRT - Page B - 14	*PCH 4/9 - Page B - 36*	*1.0DX_VCCSTG/VCCSFR_OC/2.5V - Page B - 58*	*P655RE LED Board - Page B - 80*
Redriver - Page B - 15	*PCH 5/9 - Page B - 37*	*PEX_VDD, 3V3_AON, 3V3_RUN - Page B - 59*	
Mini DP Port E - Page B - 16	*PCH 6/9 - Page B - 38*	*NVVDD Phase 1 & 2 - Page B - 60*	
Mini DP Port F - Page B - 17	*PCH 7/9 - Page B - 39*	*FBVDDQ - Page B - 61*	
HDMI Connector - Page B - 18	*PCH 8/9 - Page B - 40*	*VCC_Core & VCCSA - Page B - 62*	
VGA PCI Express - Page B - 19	*PCH 9/9 - Page B - 41*	*VCore & VCCSA Output Stage - Page B - 63*	
VGA Frame Buffer Partition - Page B - 20	*USB3.0 - Page B - 42*	*VCCGT - Page B - 64*	
Frame Buffer Partition A - Page B - 21	*USB Charger - Page B - 43*	*VCCGT Output Stage - Page B - 65*	
Frame Buffer Partition B - Page B - 22	*M.2 3G + M.2 SATA - Page B - 44*	*P650RE Audio Board A - Page B - 66*	
Frame Buffer Partition A_B - Page B - 23	*M.2 WLAN+BT, PCIE4X SSD - Page B - 45*	*P650RE Power Board - Page B - 67*	

Table B - 1
SCHEMATIC DIAGRAMS

Version Note

The schematic diagrams in this chapter are based upon version 6-7P-P65RC-003. If your mainboard (or other boards) are a later version, please check with the Service Center for updated diagrams (if required).

System Block Diagram

Sheet 1 of 79
System Block Diagram

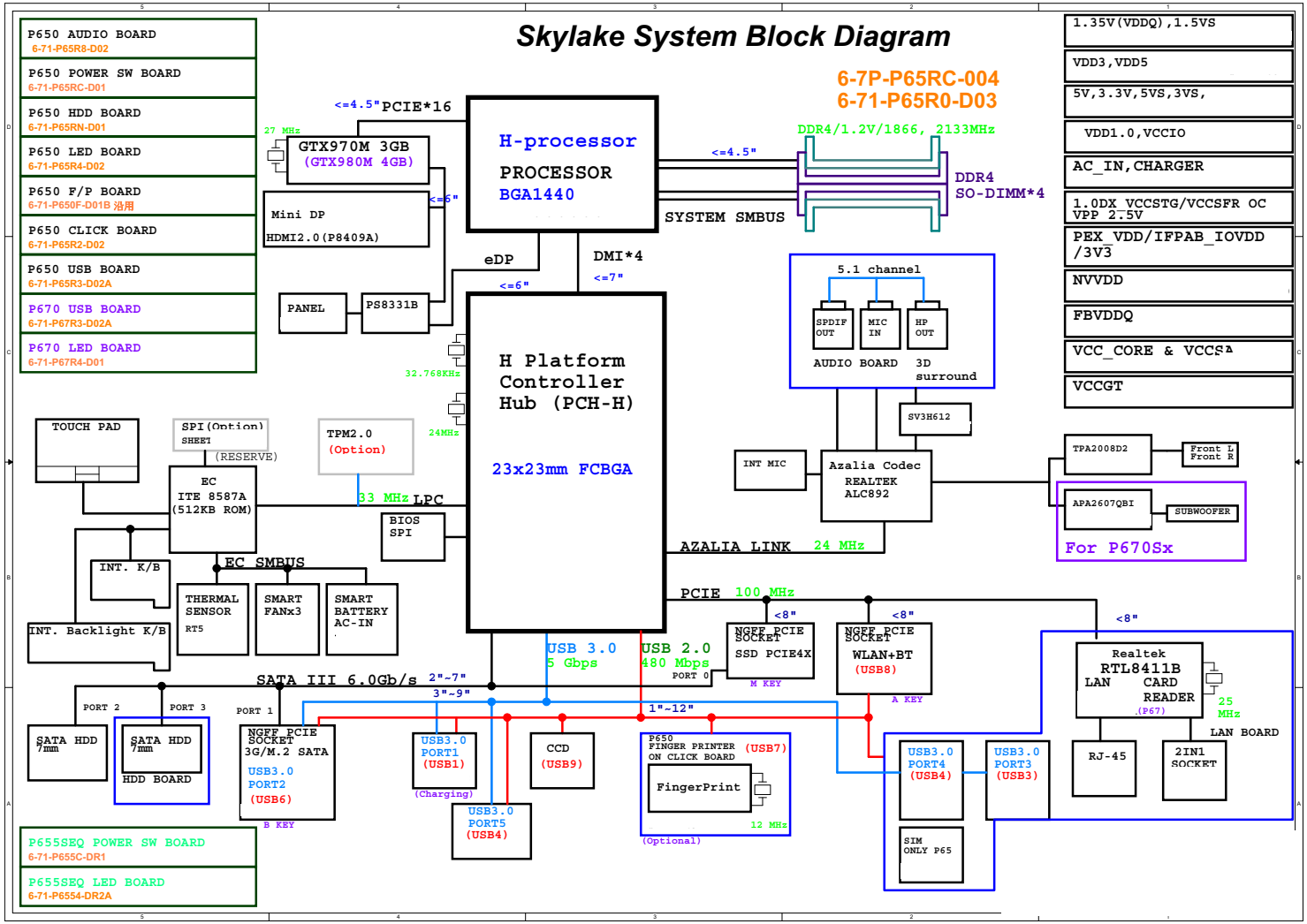

Processor 1/7

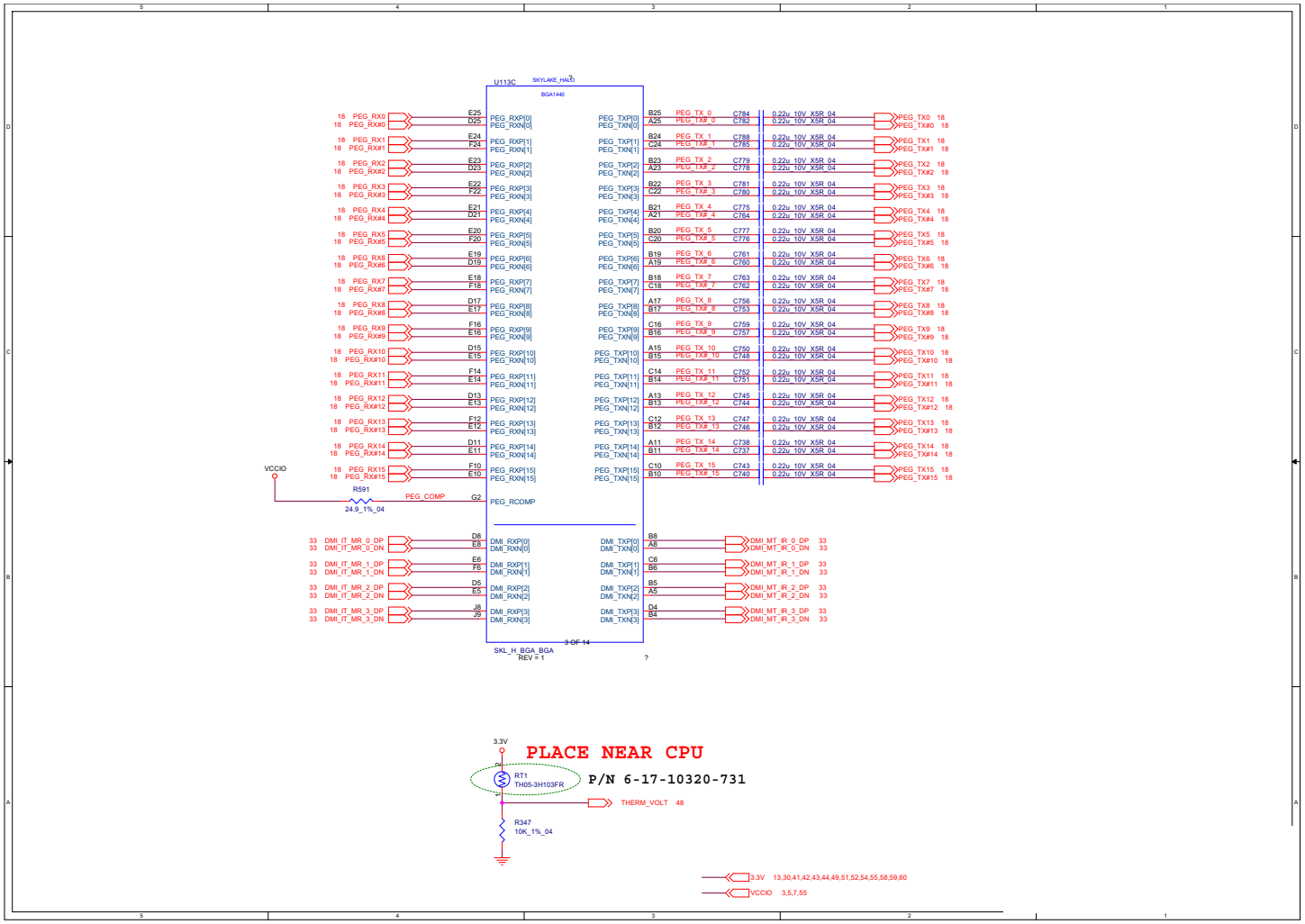

Sheet 2 of 79
Processor 1/7

Processor 2/7

Sheet 3 of 79
Processor 2/7

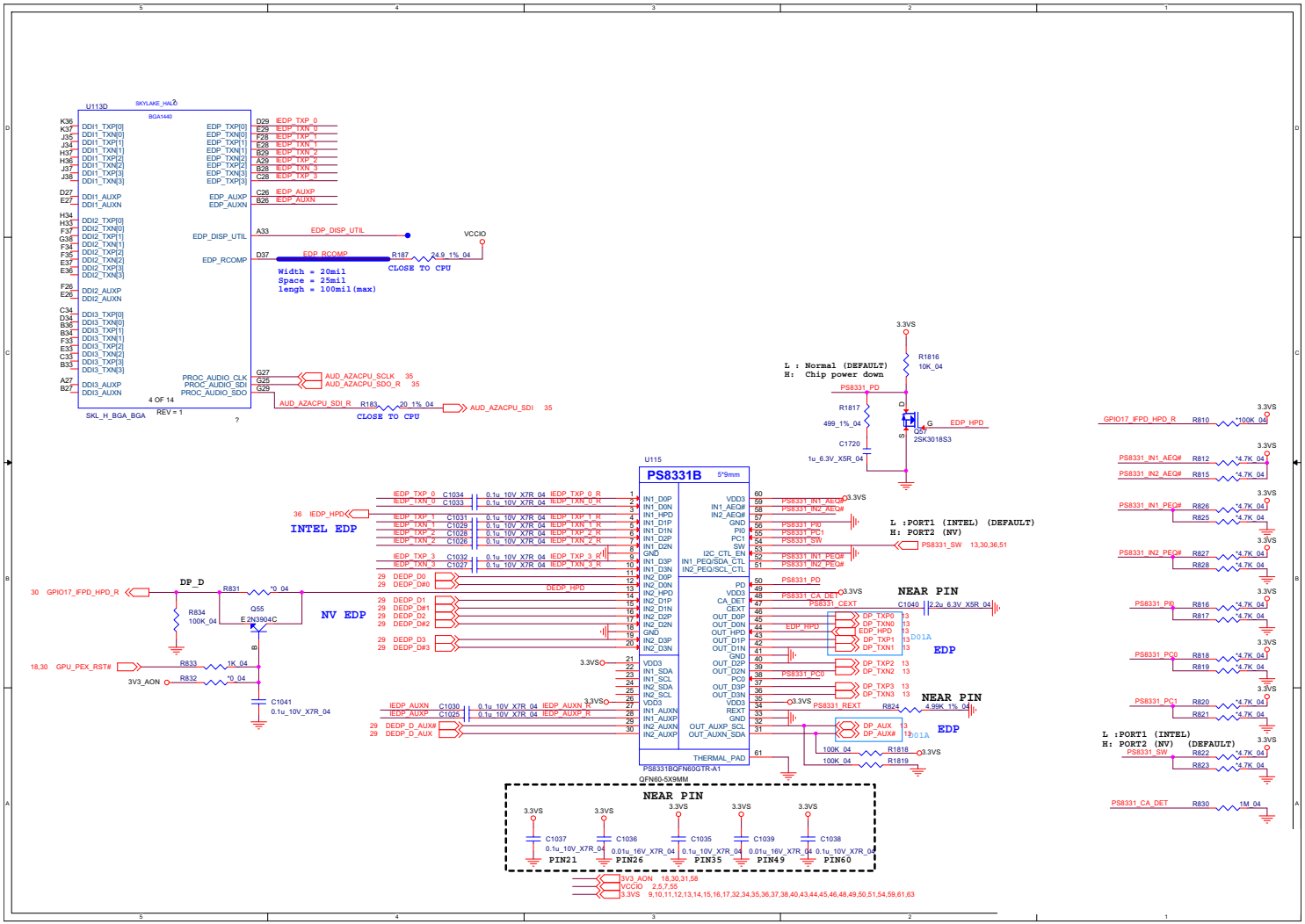

Processor 3/7

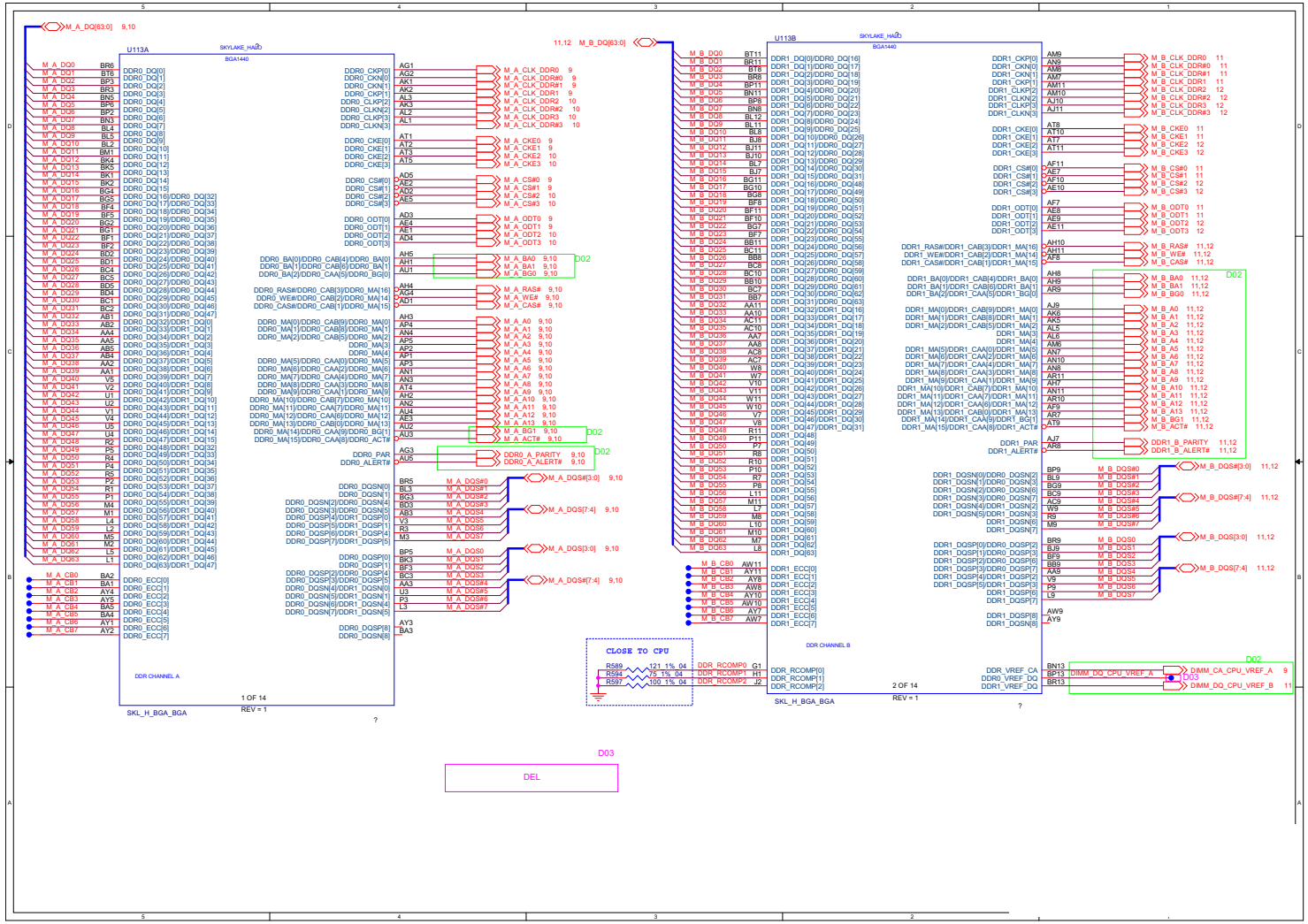

Sheet 4 of 79
Processor 3/7

Processor 4/7

Sheet 5 of 79
Processor 4/7

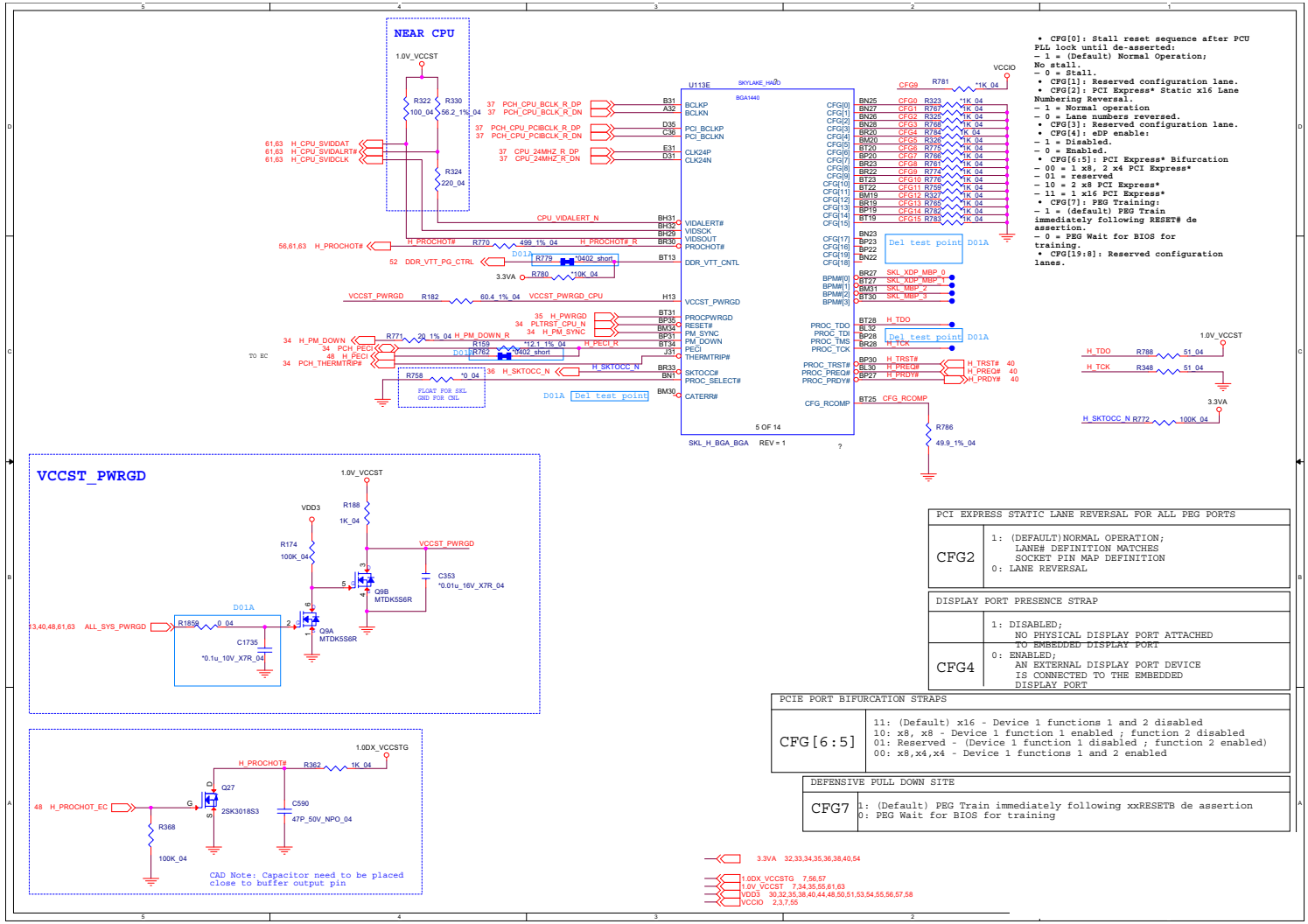

Processor 5/7

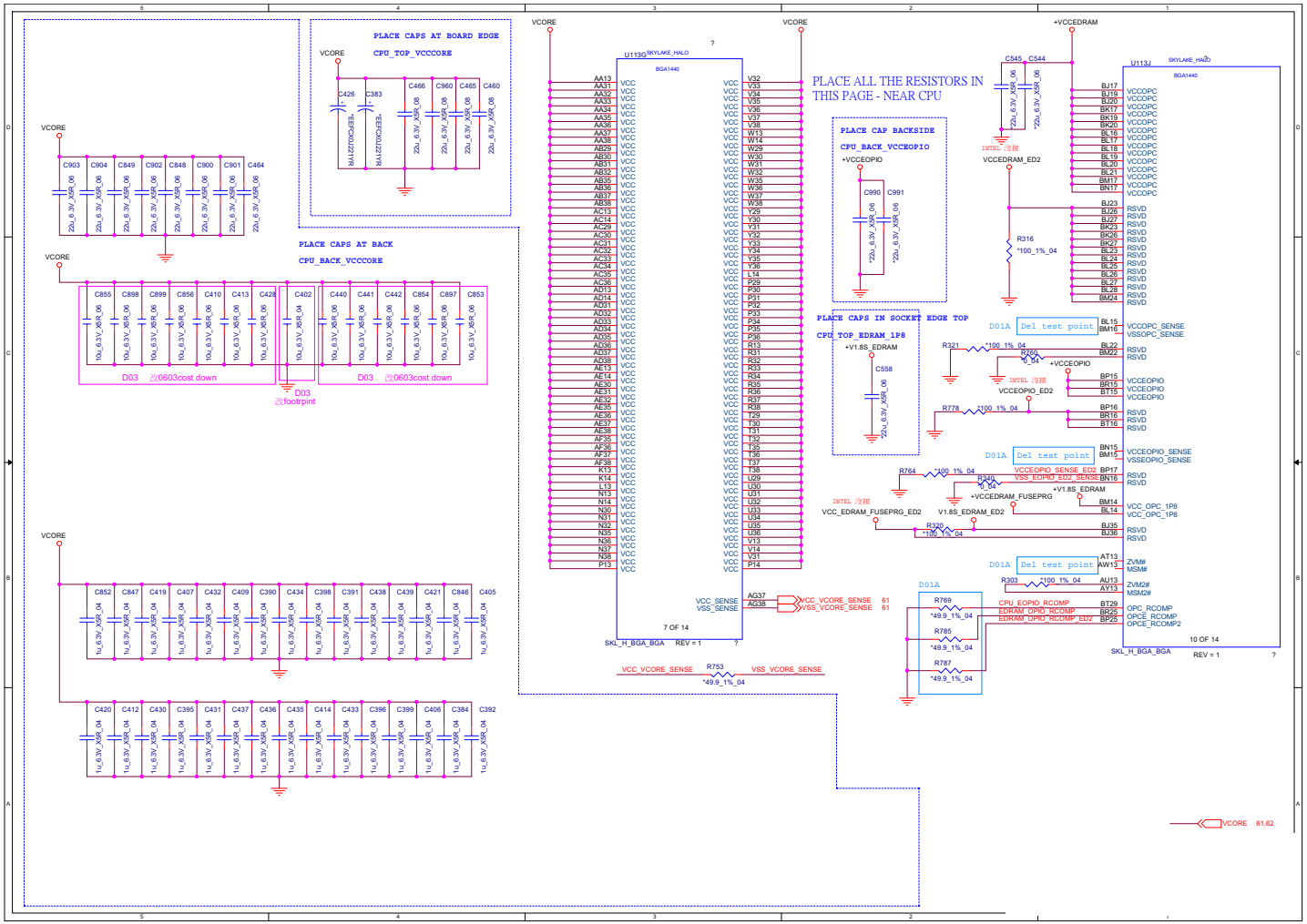

Sheet 6 of 79
Processor 5/7

B.Schematic Diagrams

Processor 6/7

Sheet 7 of 79
Processor 6/7

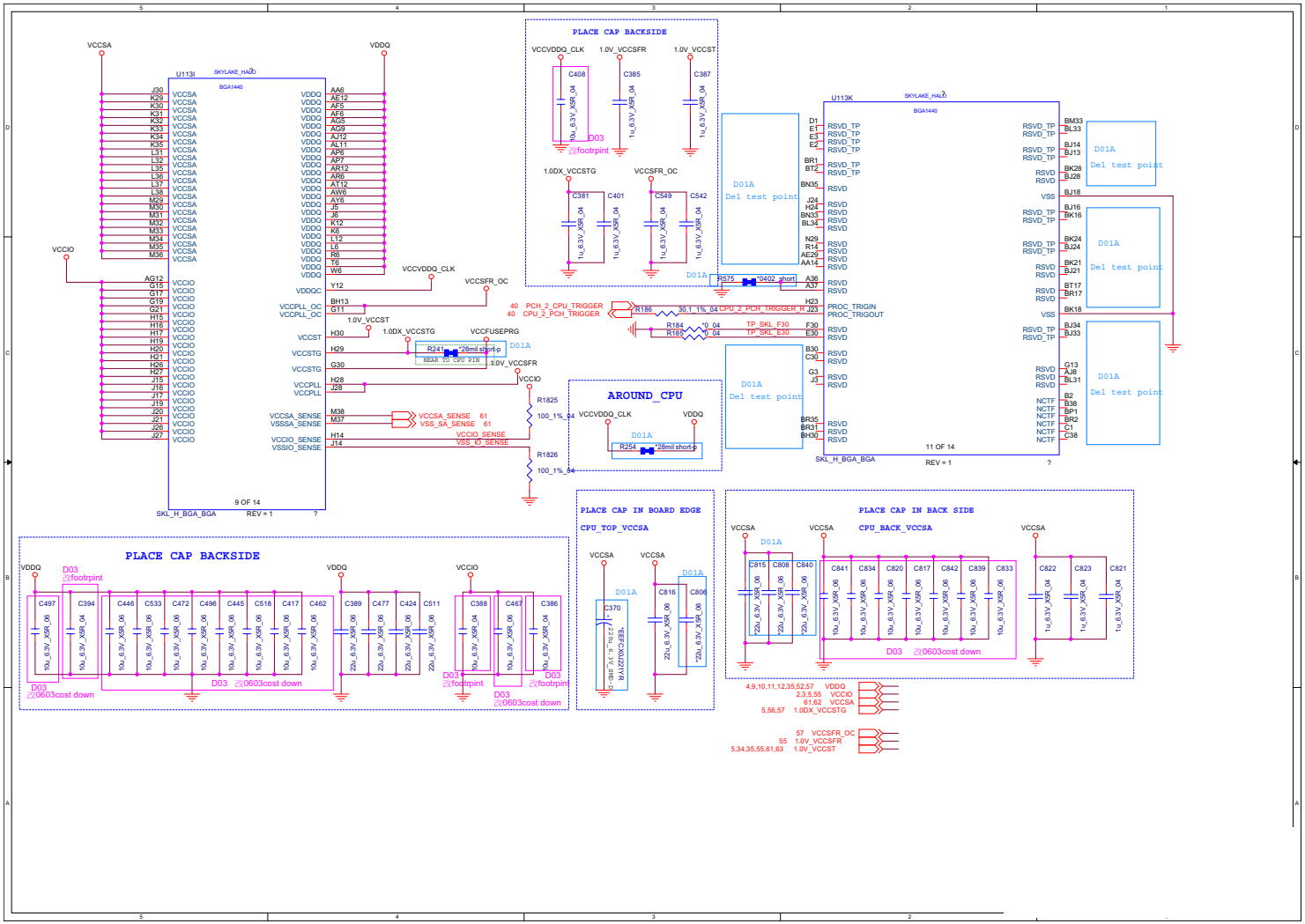

Processor 7/7

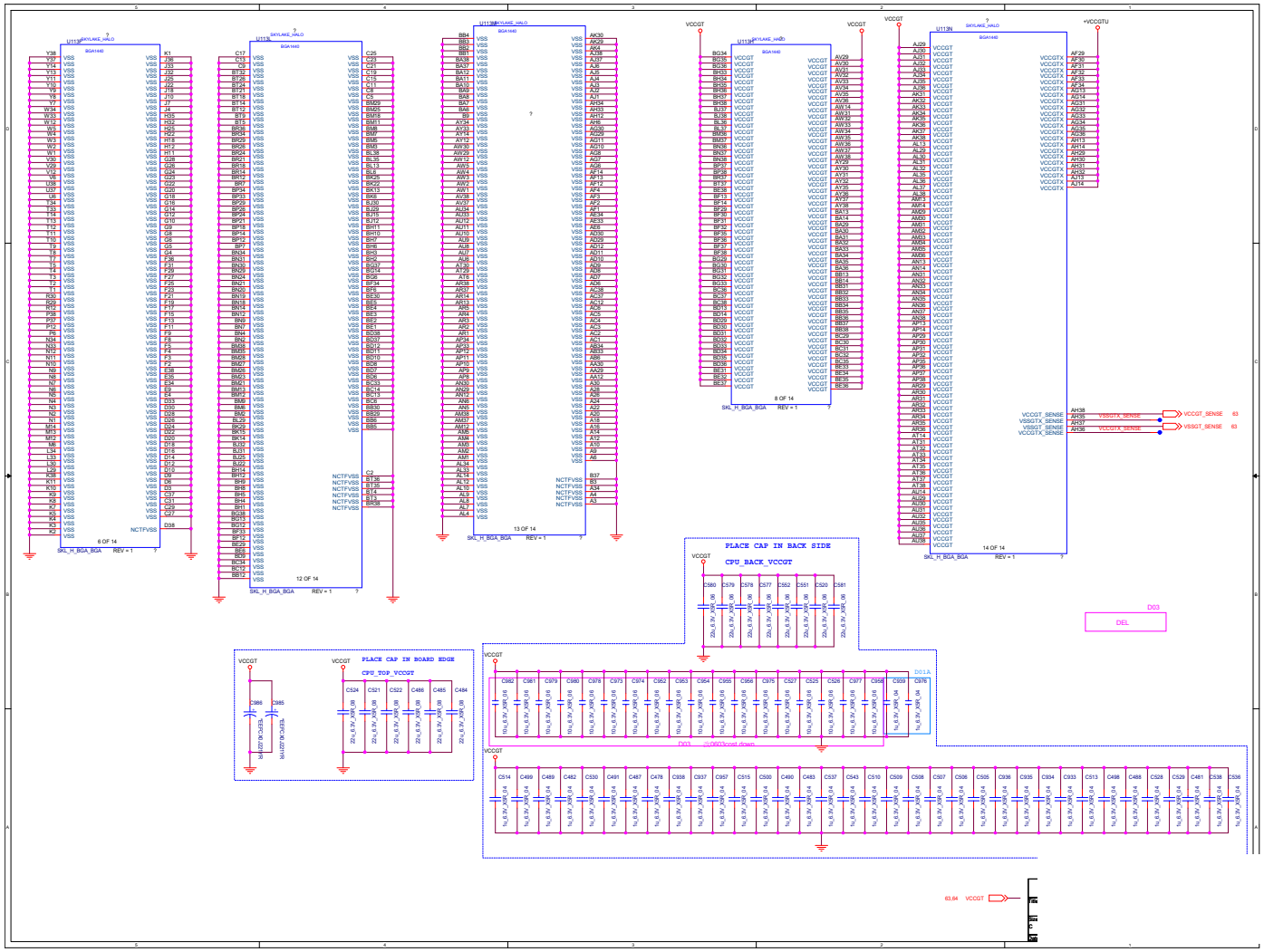

Sheet 8 of 79
Processor 7/7

DDR4 CHA SO-DIMM_0

Sheet 9 of 79
DDR4 CHA SO-DIMM_0

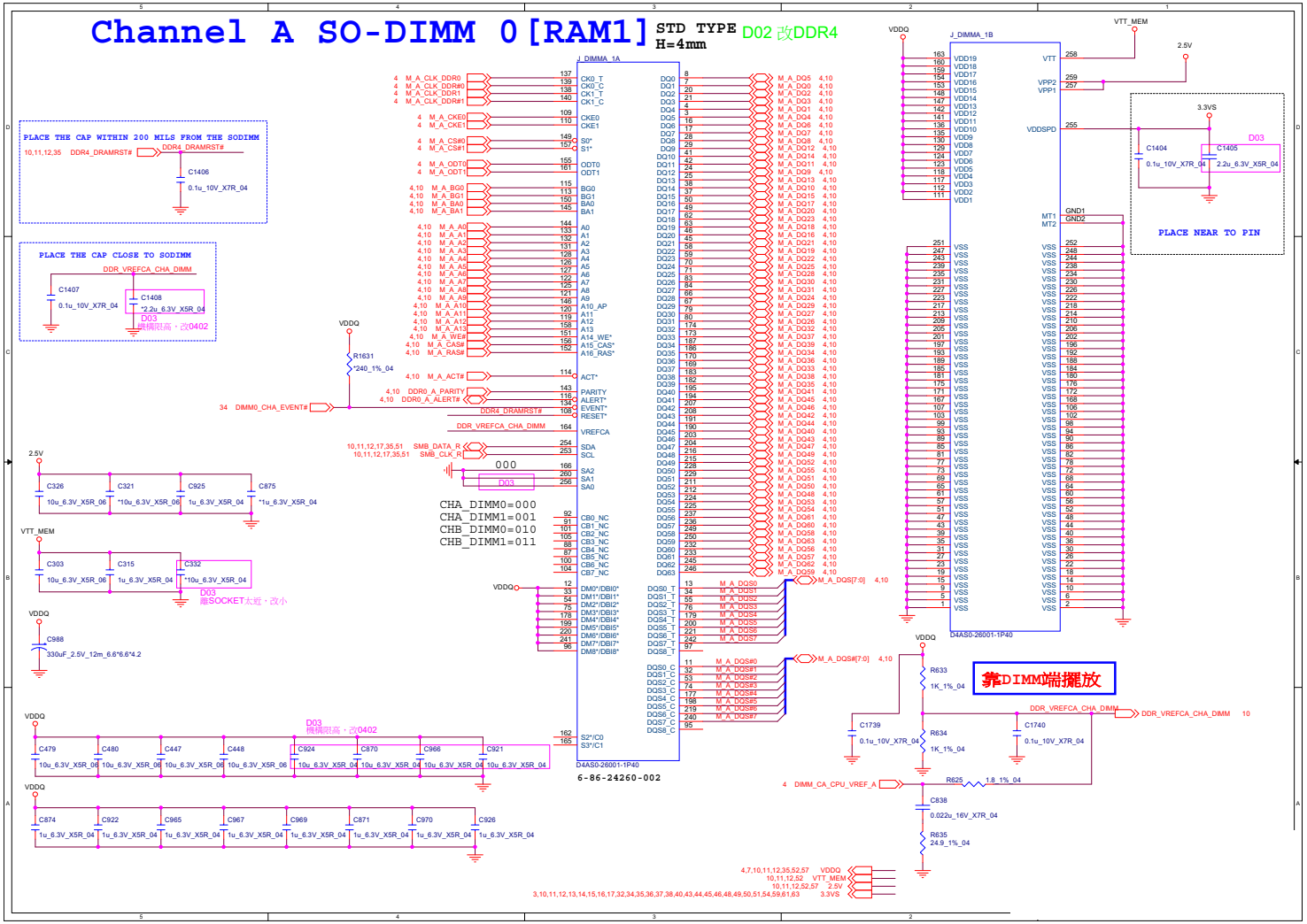

DDR4 CHA SO-DIMM_1

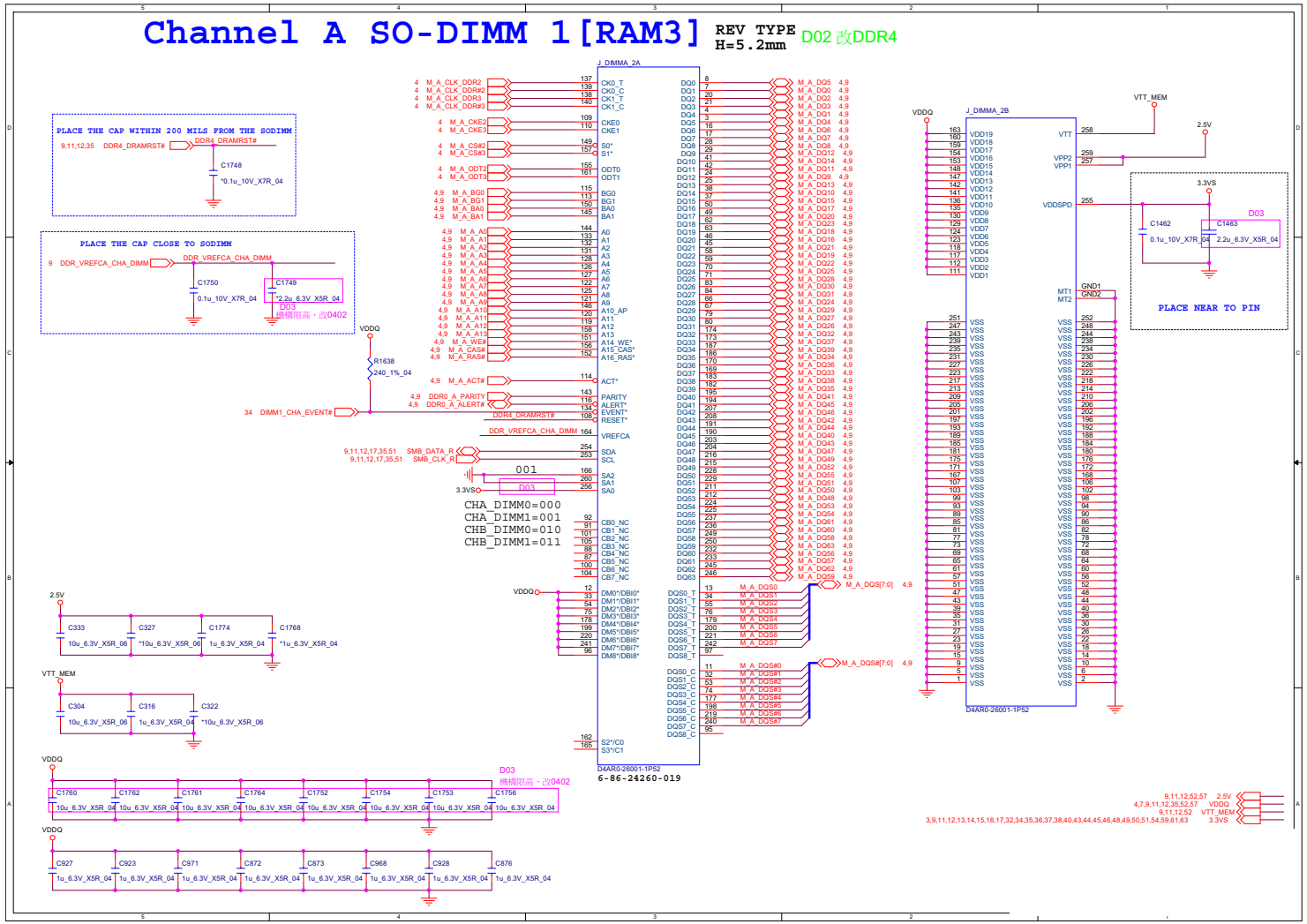

Sheet 10 of 79
DDR4 CHA SO-DIMM_1

DDR4 CHB SO-DIMM_0

Sheet 11 of 79
DDR4 CHB SO-DIMM_0

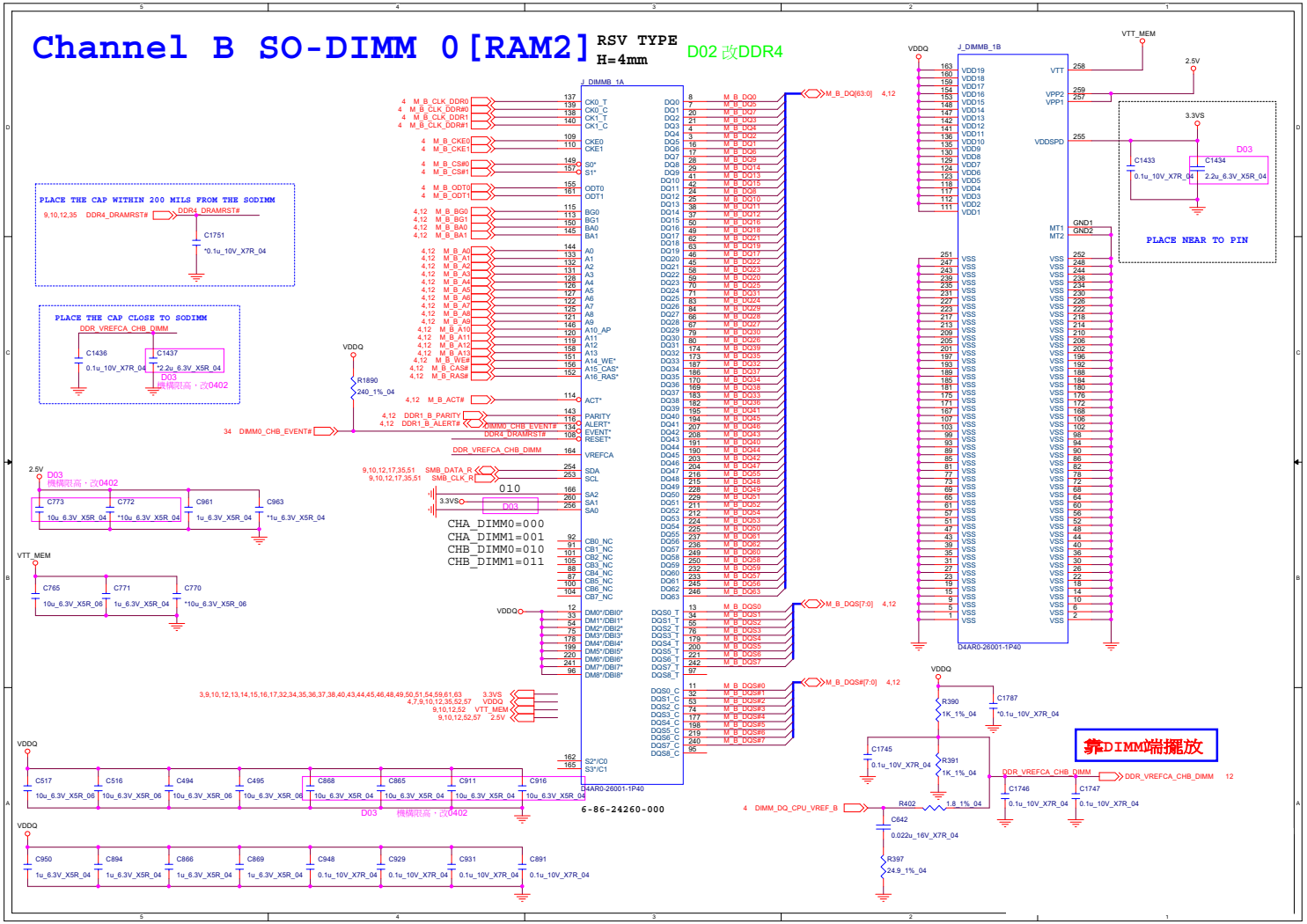

DDR4 CHB SO-DIMM_1

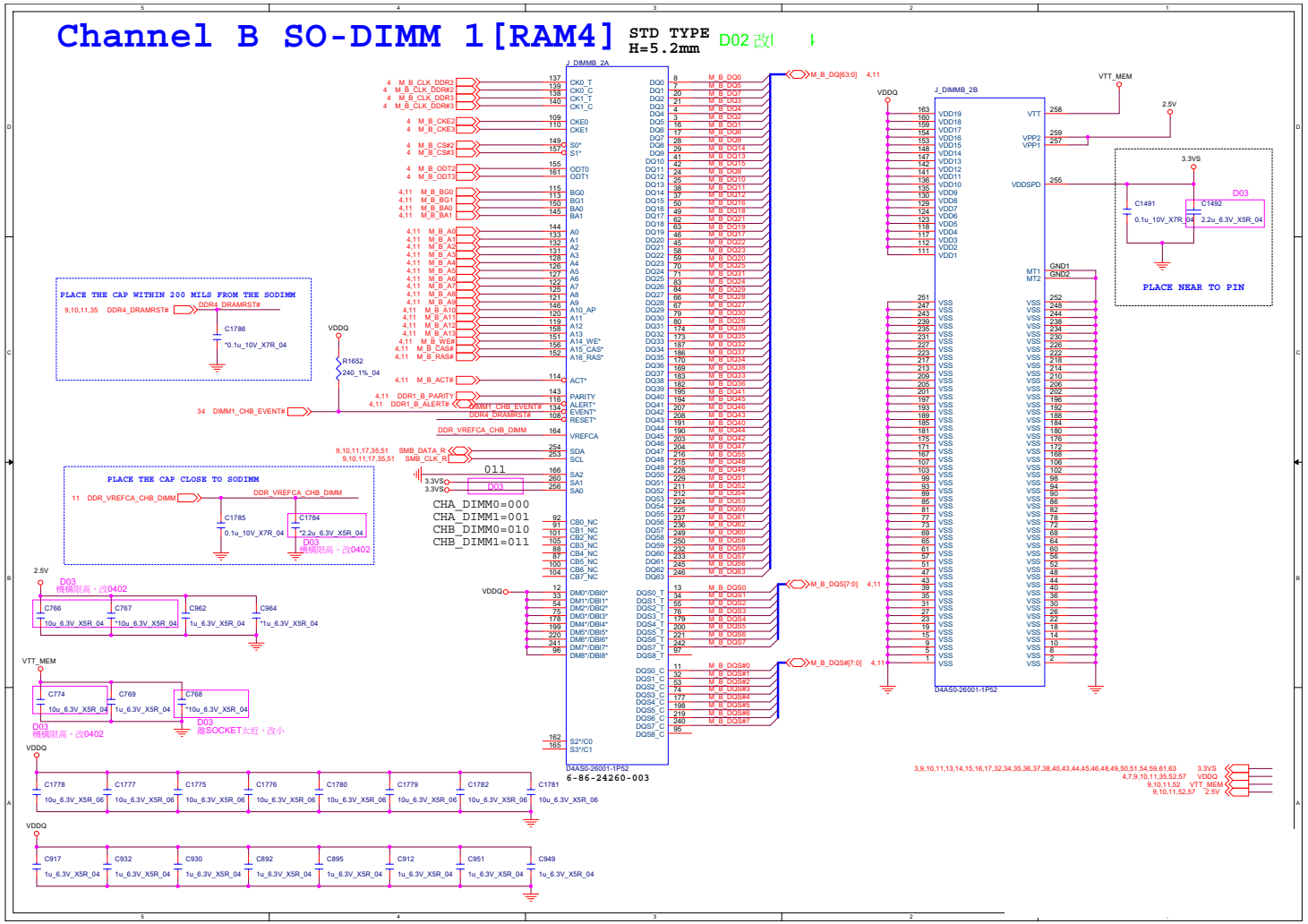

Sheet 12 of 79
DDR4 CHB SO-DIMM_1

Panel, Inverter, CRT

Sheet 13 of 79
Panel, Inverter, CRT

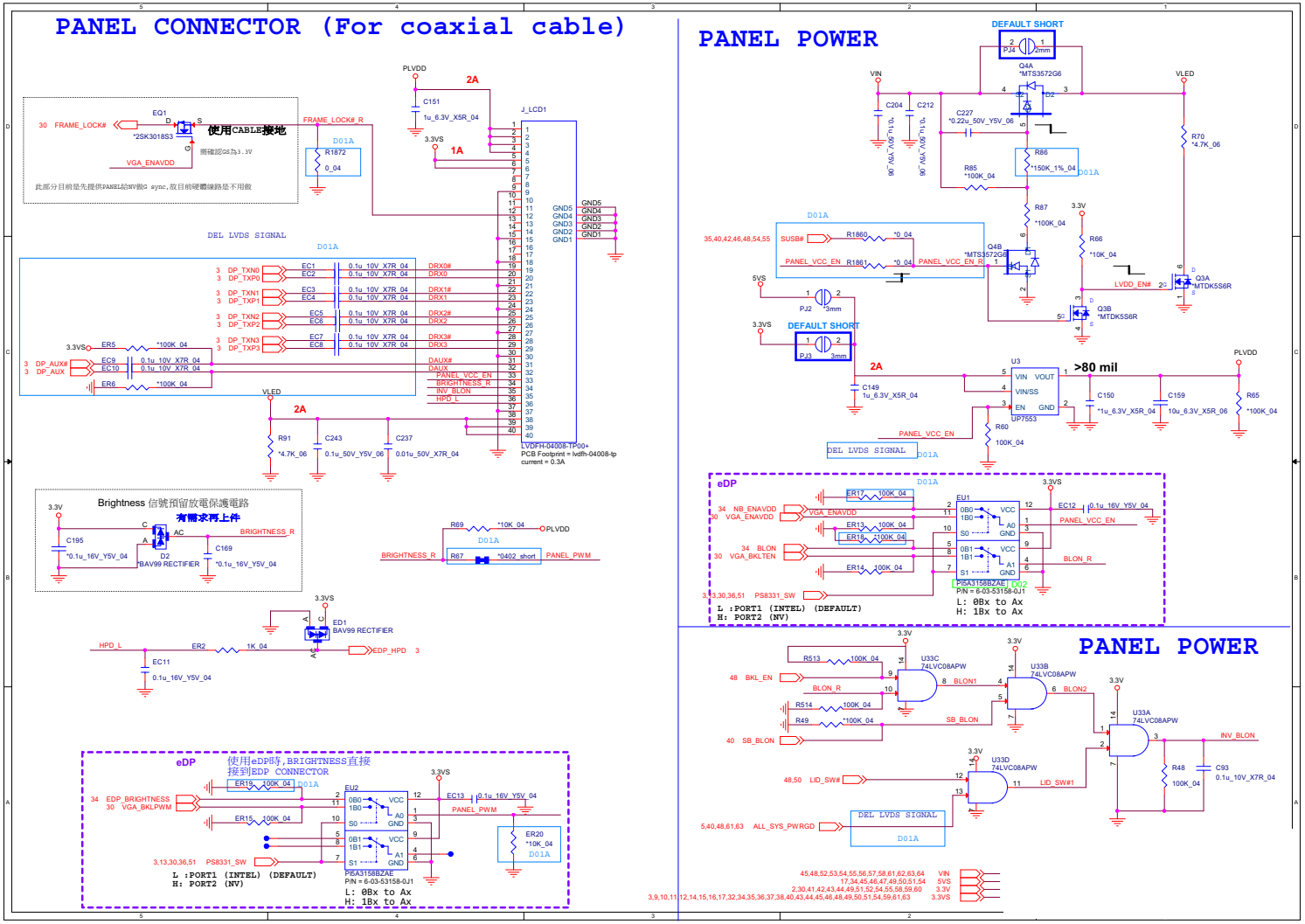

Redriver

	SN75DP130SS	PS8330B
pin2	1uF GND	2.2uF GND
pin3	*10K VCC, *10K GND	GND
pin4	x	*4.7K VCC, *4.7K GND
pin5	x	*4.7K VCC, *4.7K GND
pin7	x	4.99K GND
pin35	0.22uF GND	10K VCC, 2.2uF GND
pin40	x	*4.7K VCC, *4.7K GND
pin46	x	x

		TI 6-02-75130-BQ0	PARADA 6-03-08330-030
	U39	SN75DP130SSRGZR	PS8330B
pin2	C826	1u_6.3V_X5R_04	2.2u_6.3V_X5R_04
pin3	R618	*10K_04	0_04
pin7	R627	X	4.99K_1%_04
pin35	R619	X	10K_04
pin35	C828	0.22u_10V_X5R_04	2.2u_6.3V_X5R_04
	U44	SN75DP130SSRGZR	PS8330B
pin2	C886	1u_6.3V_X5R_04	2.2u_6.3V_X5R_04
pin3	R694	*10K_04	0_04
pin7	R726	X	4.99K_1%_04
pin35	R691	X	10K_04
pin35	C890	0.22u_10V_X5R_04	2.2u_6.3V_X5R_04

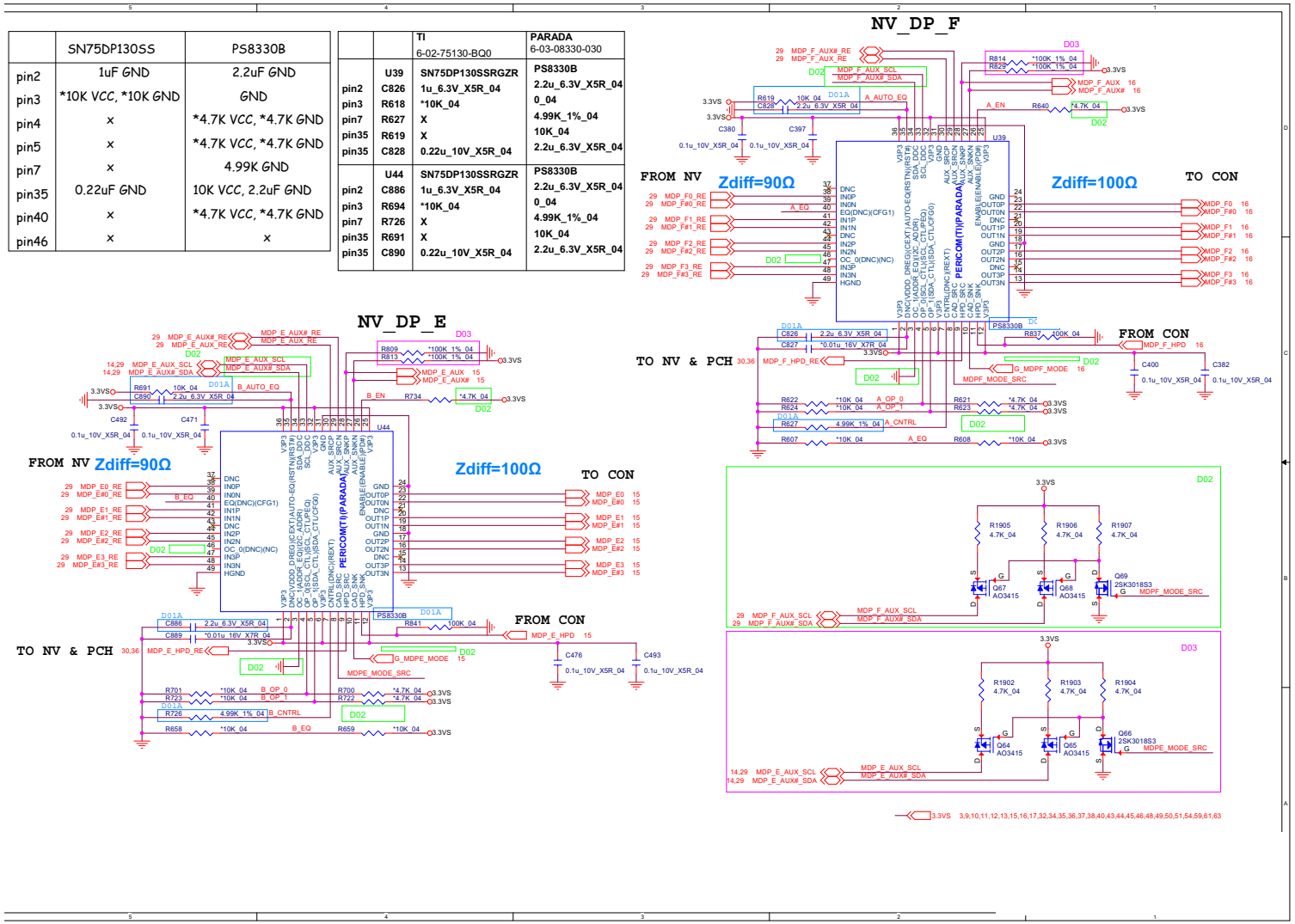

Sheet 14 of 79
Redriver

Mini DP Port E

Sheet 15 of 79
Mini DP Port E

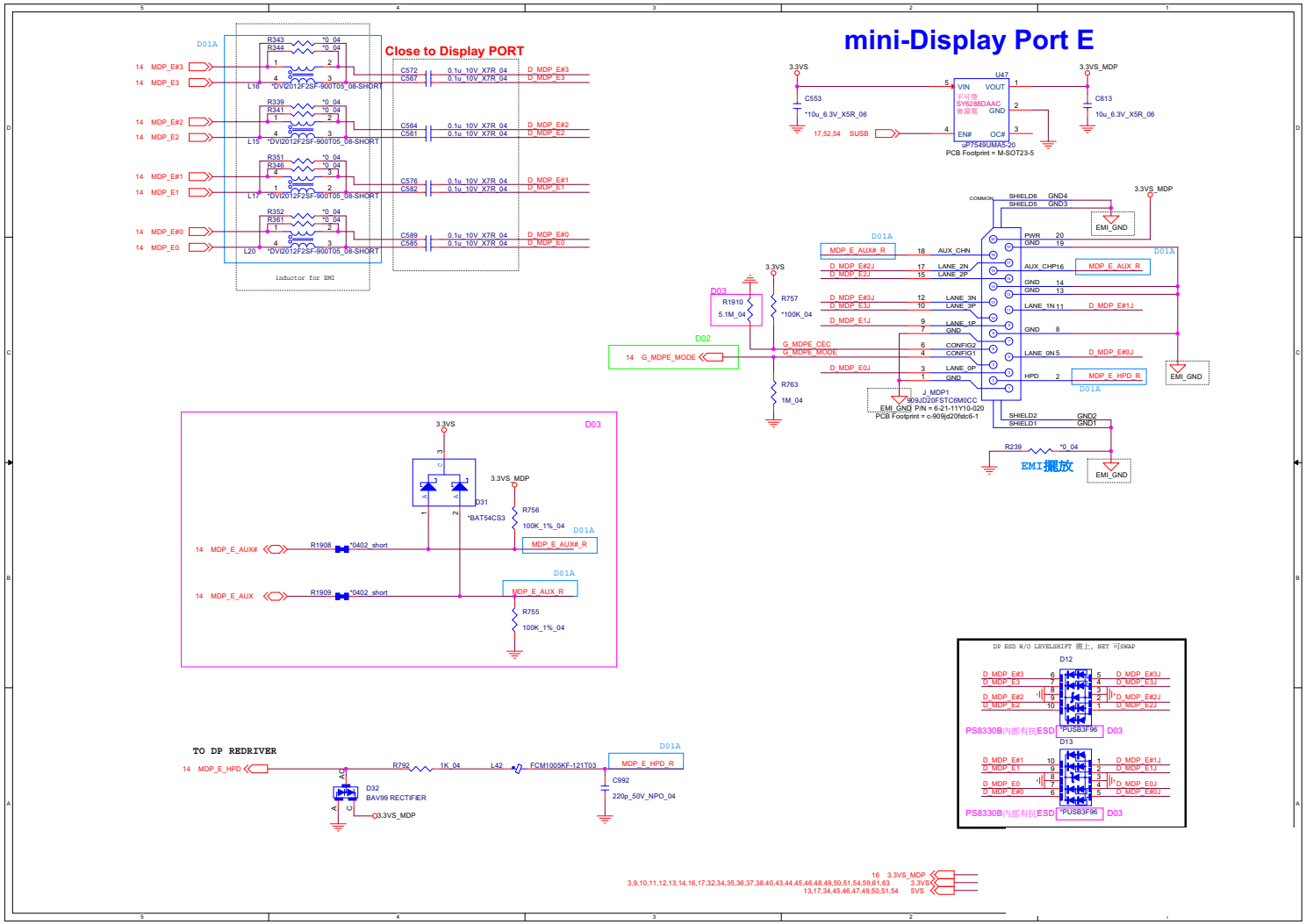

Mini DP Port F

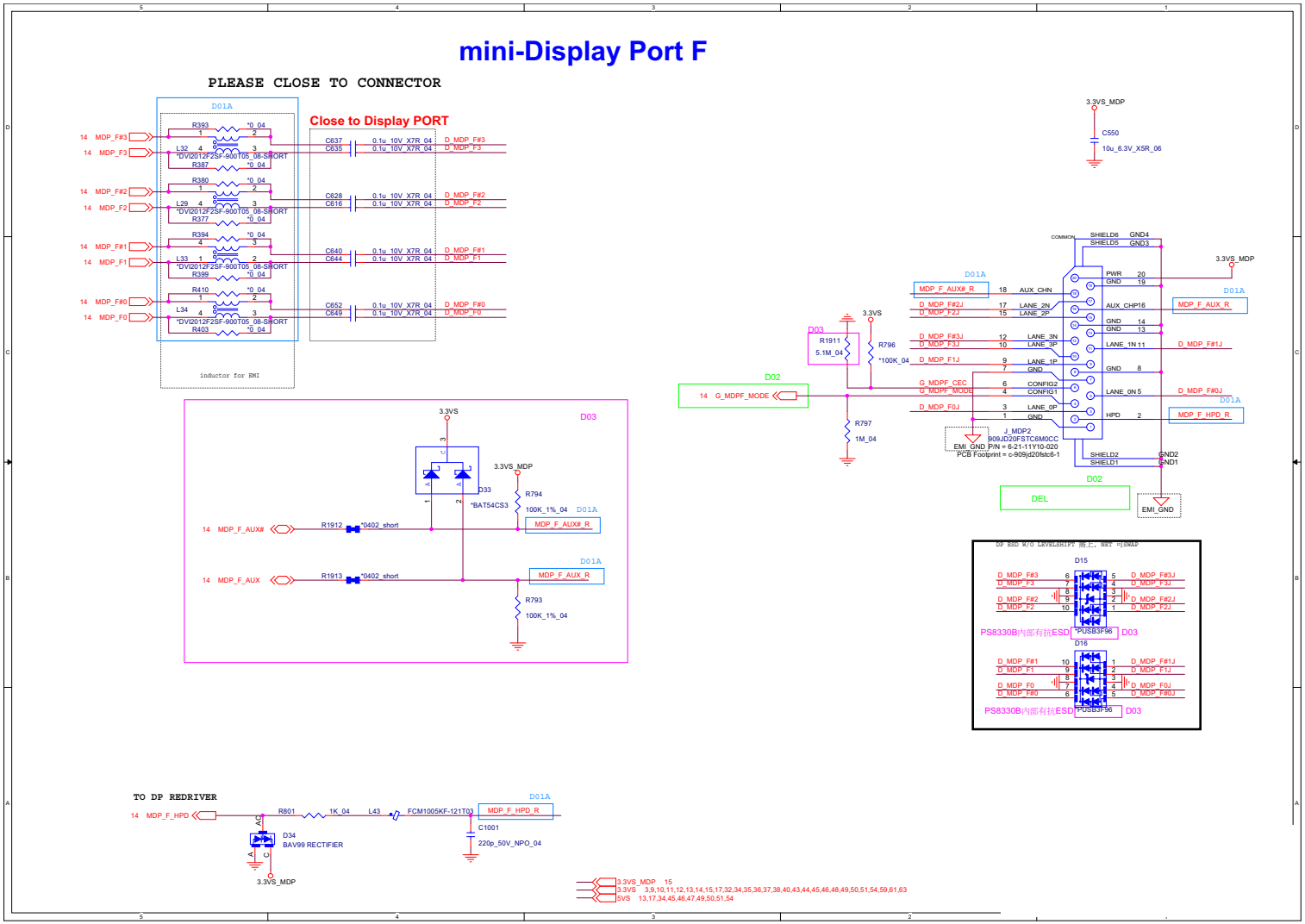

Sheet 16 of 79
Mini DP Port F

HDMI Connector

Sheet 17 of 79
HDMI Connector

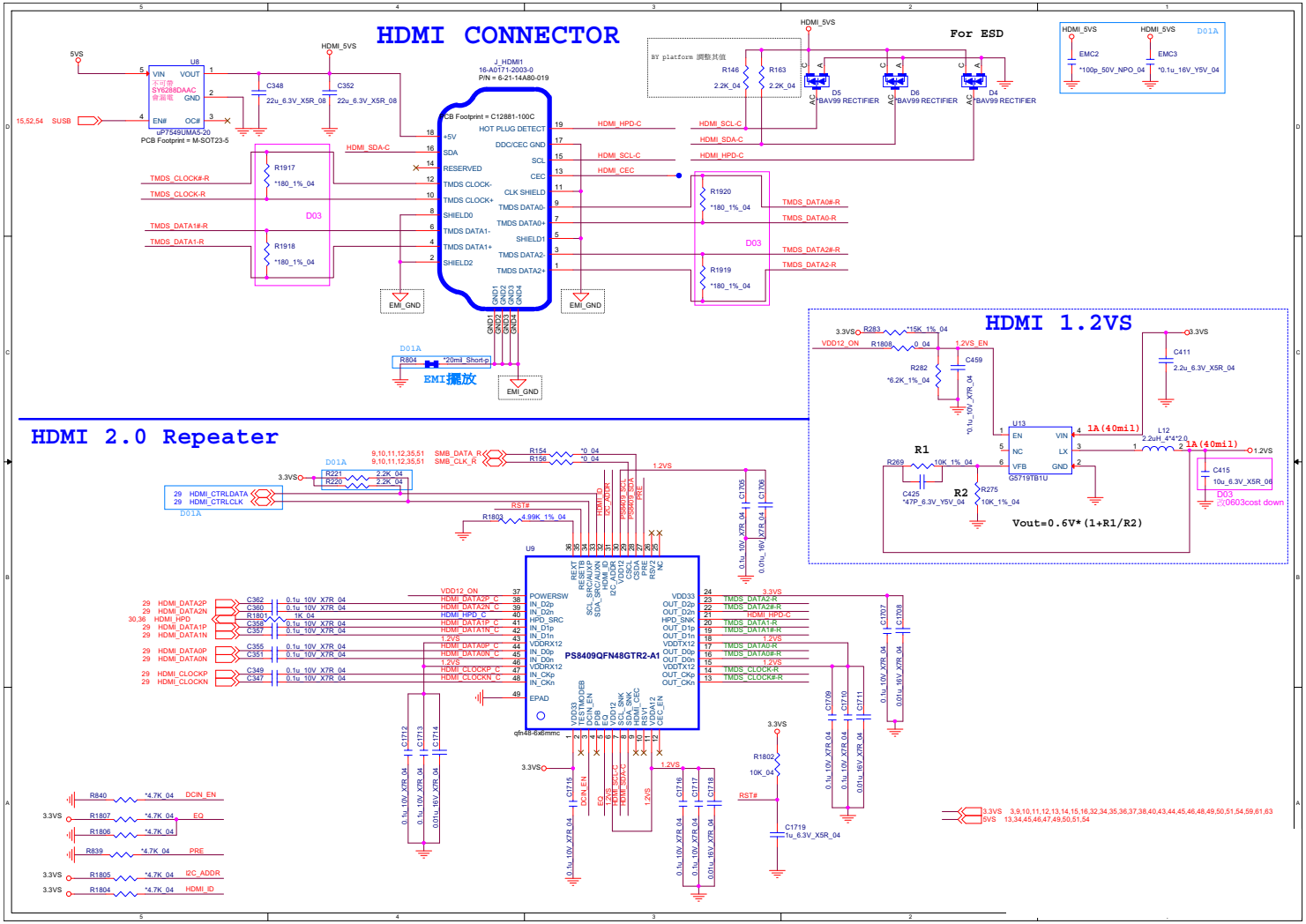

VGA PCI Express

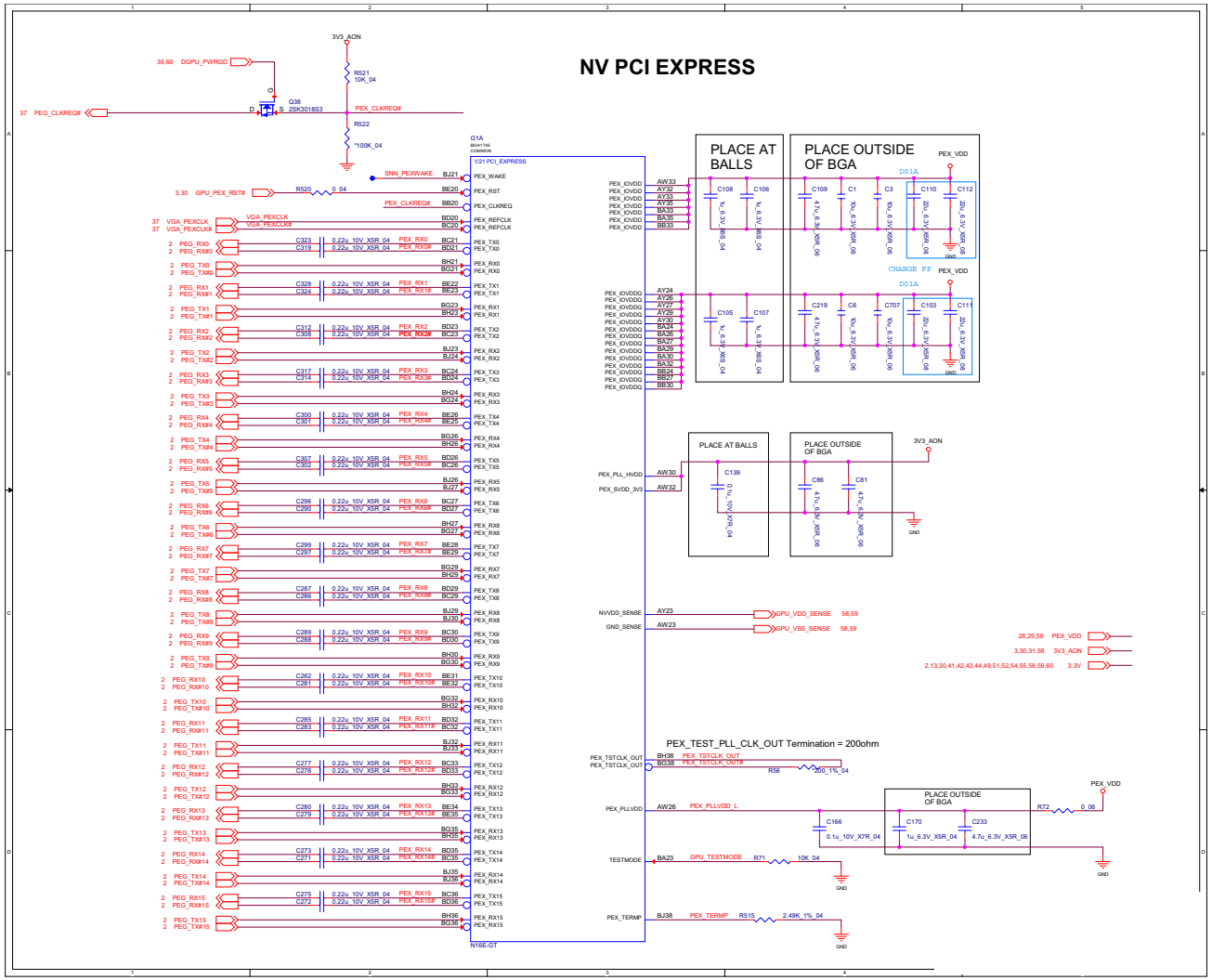

Sheet 18 of 79
VGA PCI Express

VGA Frame Buffer Partition

Sheet 19 of 79
VGA Frame Buffer Partition

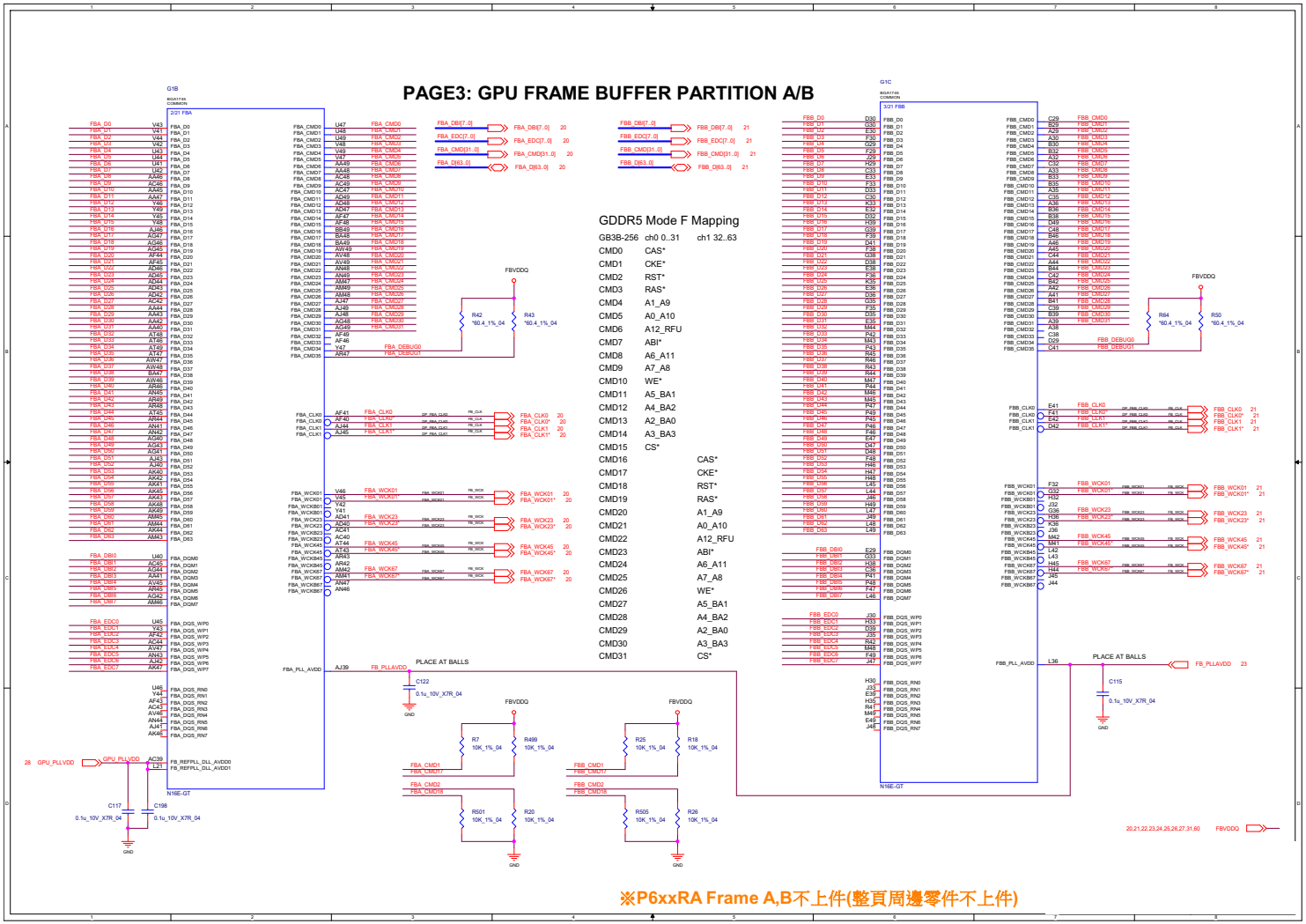

Frame Buffer Partition A

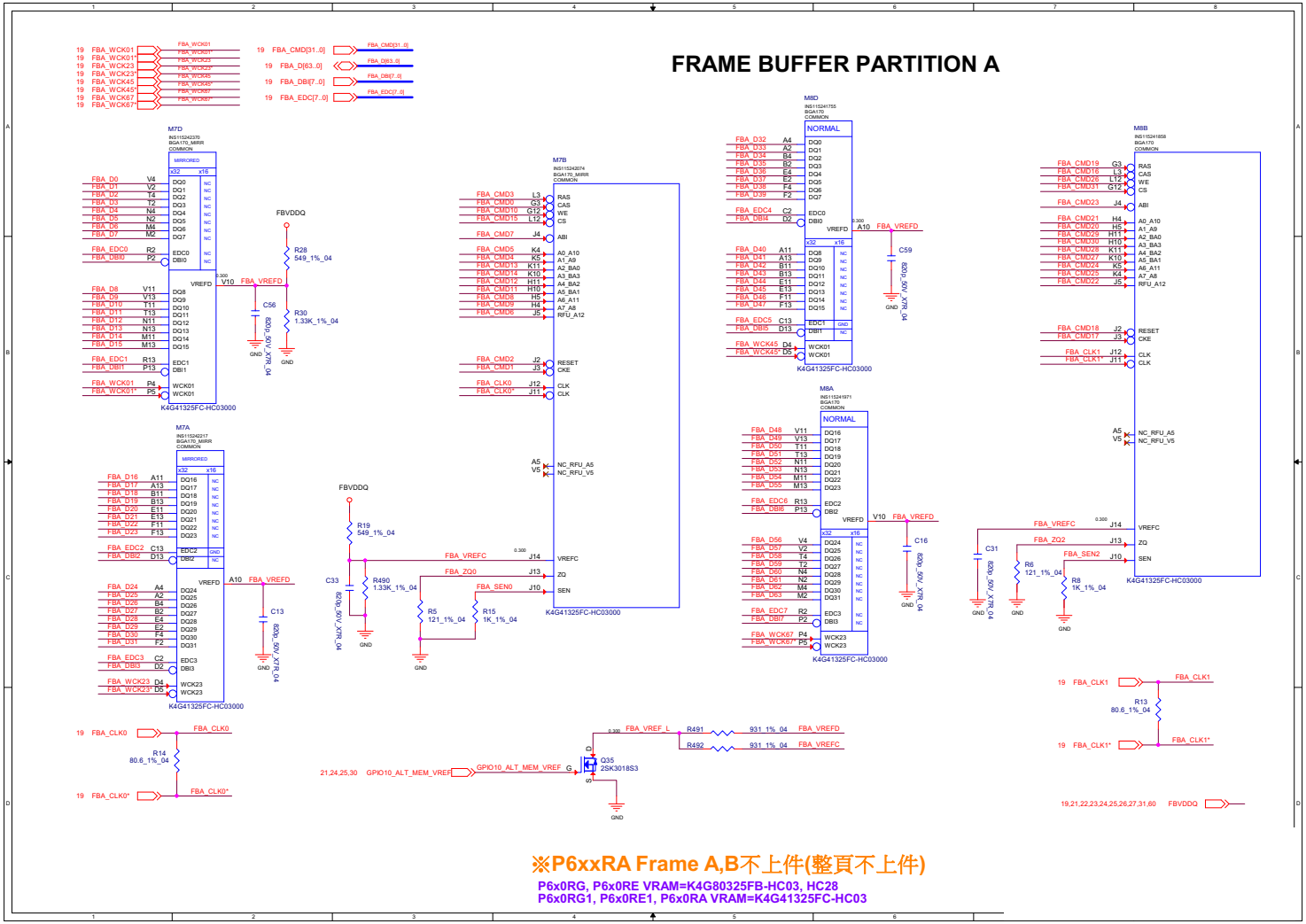

Sheet 20 of 79
Frame Buffer
Partition A

B.Schematic Diagrams

Frame Buffer Partition B

Sheet 21 of 79
Frame Buffer Partition B

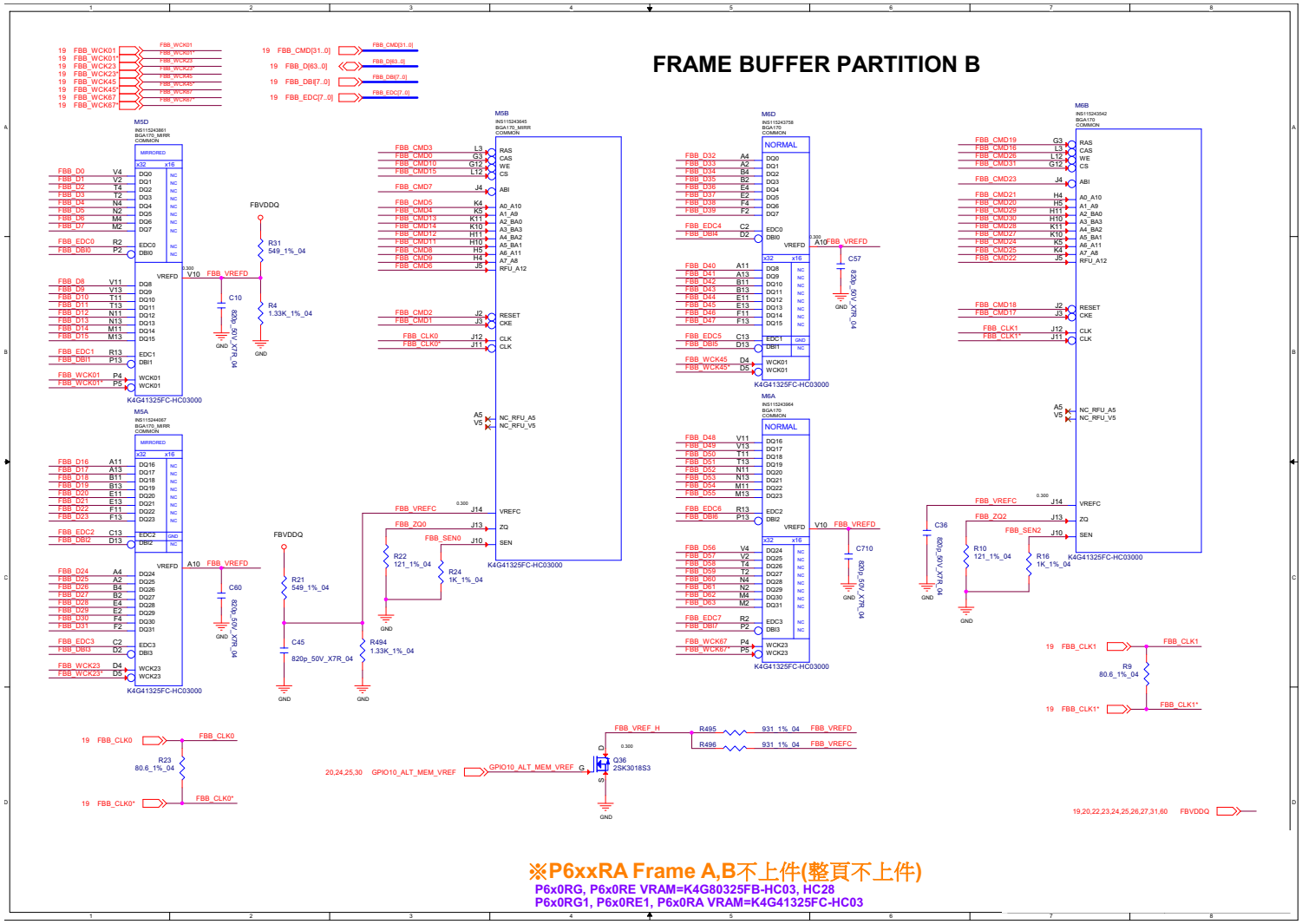

※P6xxRA Frame A,B不上件(整頁不上件)
P6x0RG, P6x0RE VRAM=K4G80325FB-HC03, HC28
P6x0RG1, P6x0RE1, P6x0RA VRAM=K4G41325FC-HC03

Frame Buffer Partition A_B

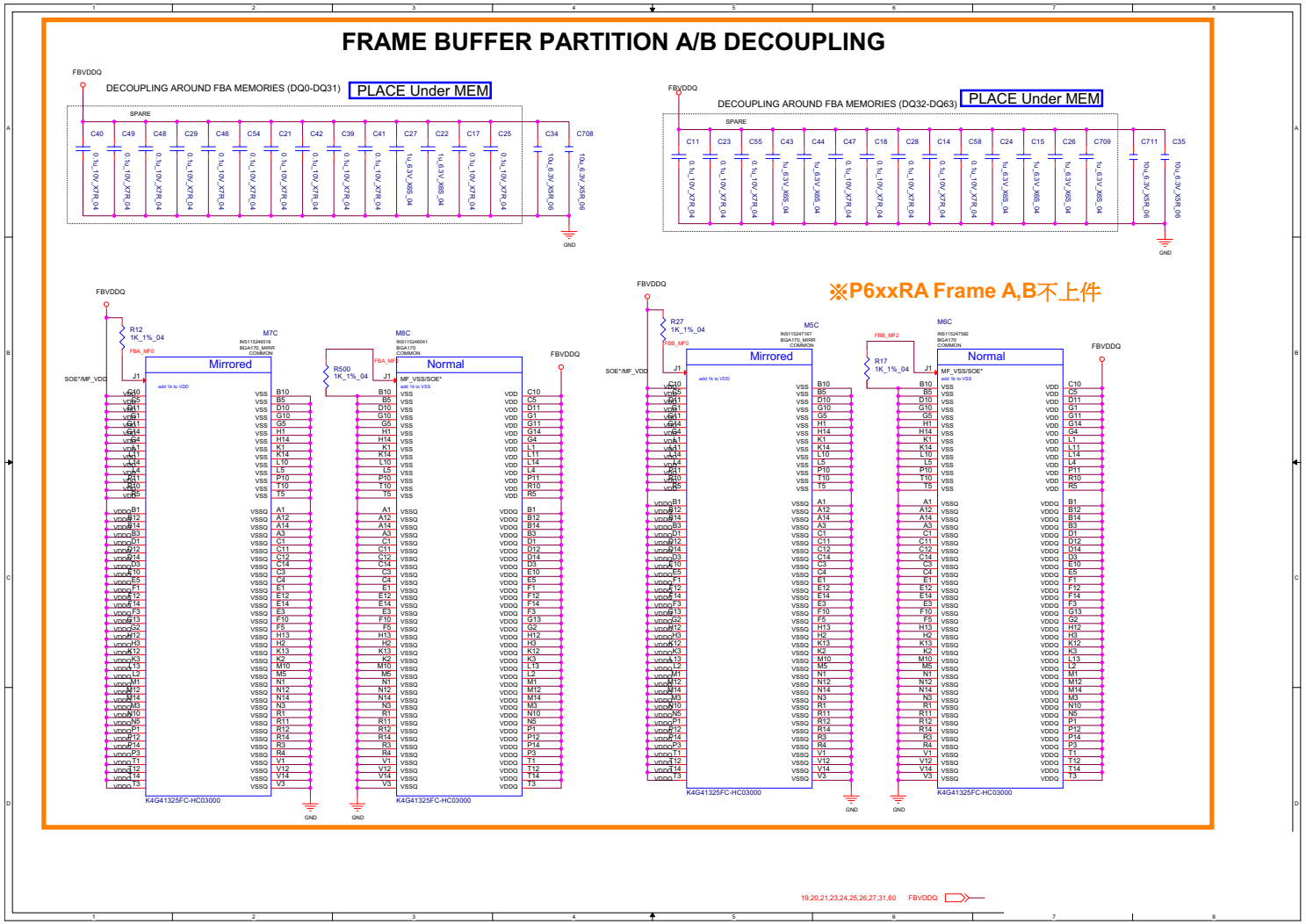

Sheet 22 of 79
Frame Buffer
Partition A_B

GPU Frame Buffer Partition

Sheet 23 of 79
GPU Frame Buffer Partition

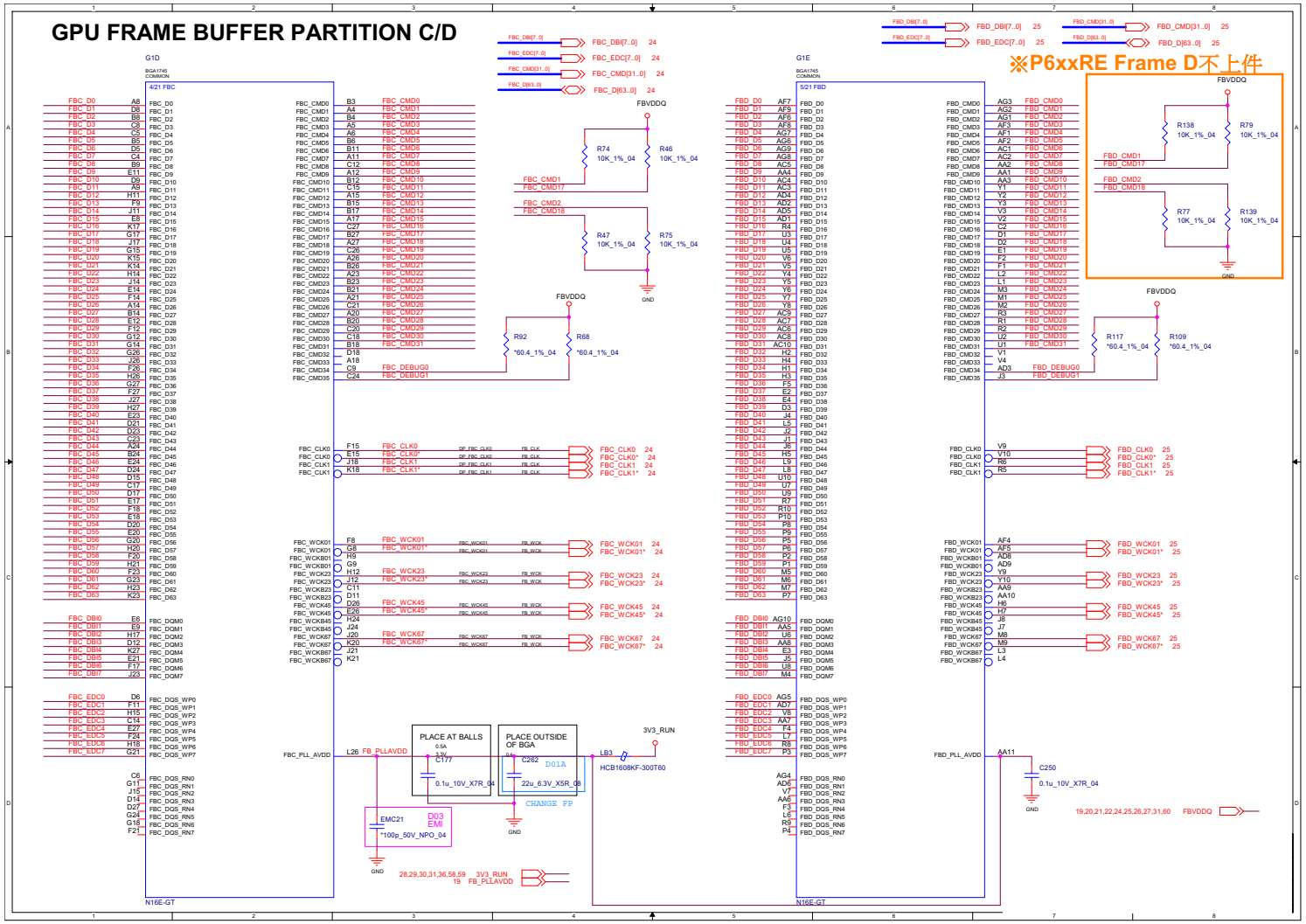

Frame Buffer Partition C

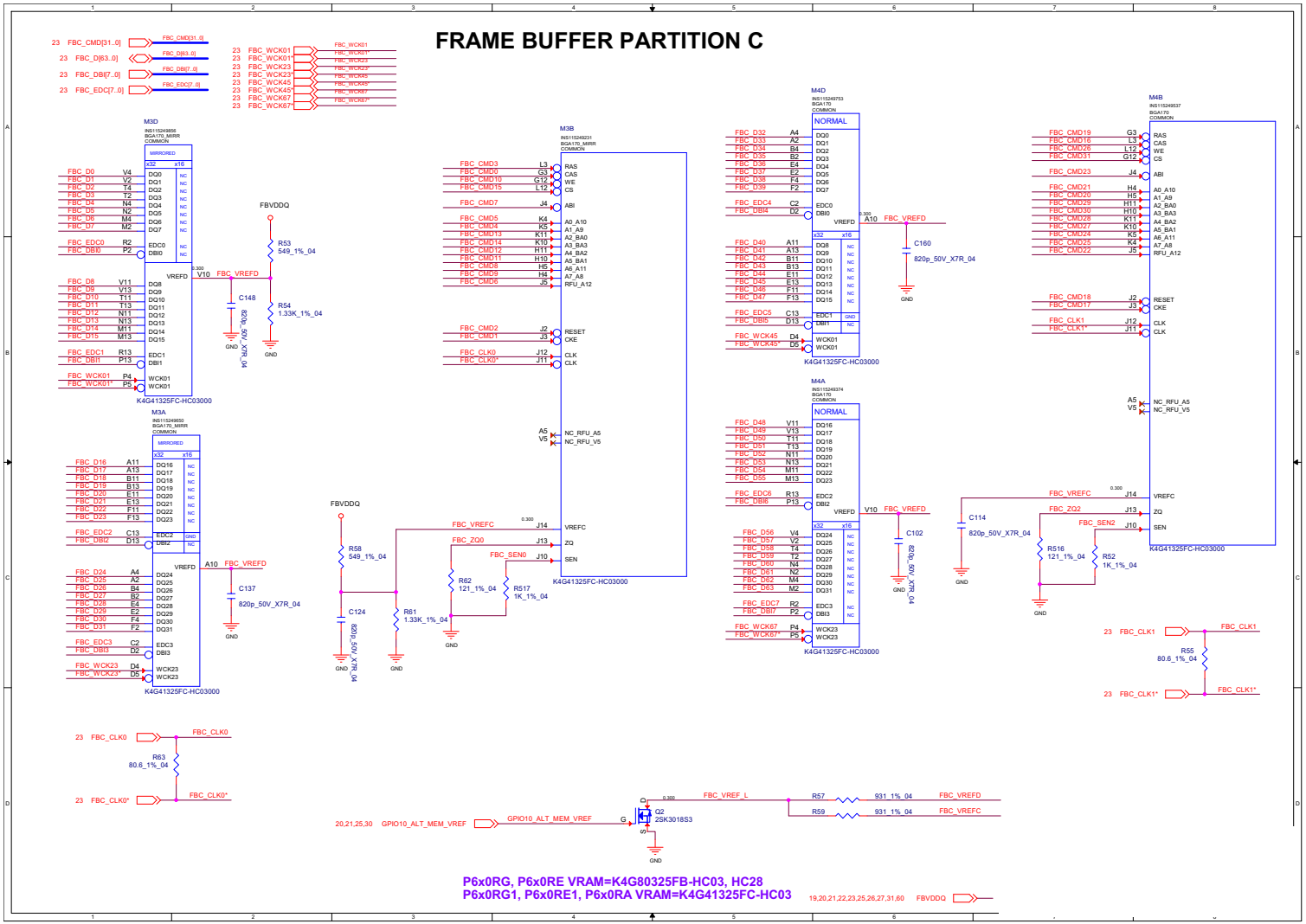

Sheet 24 of 79
Frame Buffer
Partition C

Frame Buffer Partition D

Sheet 25 of 79
Frame Buffer Partition D

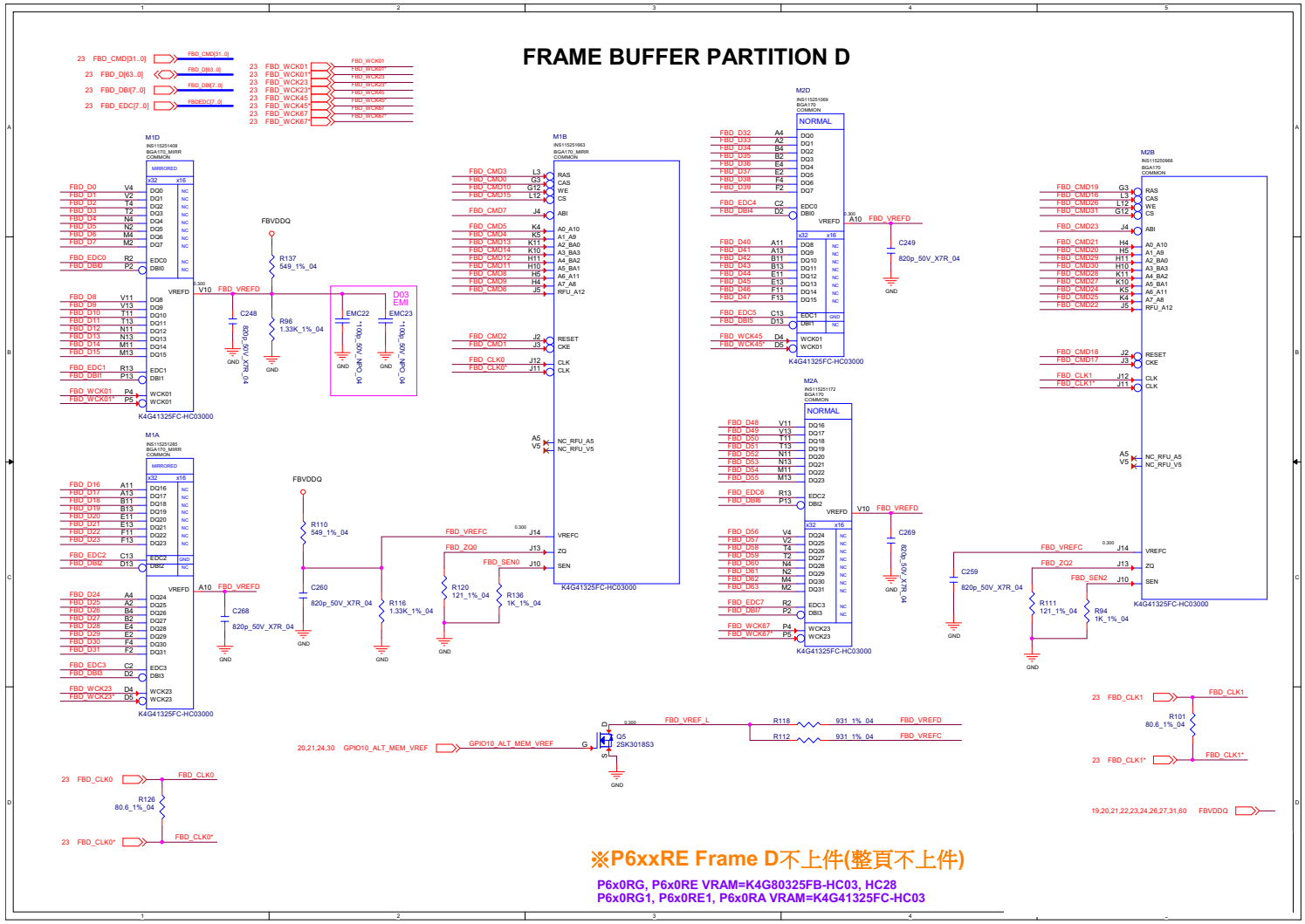

Frame Buffer Partition C_D

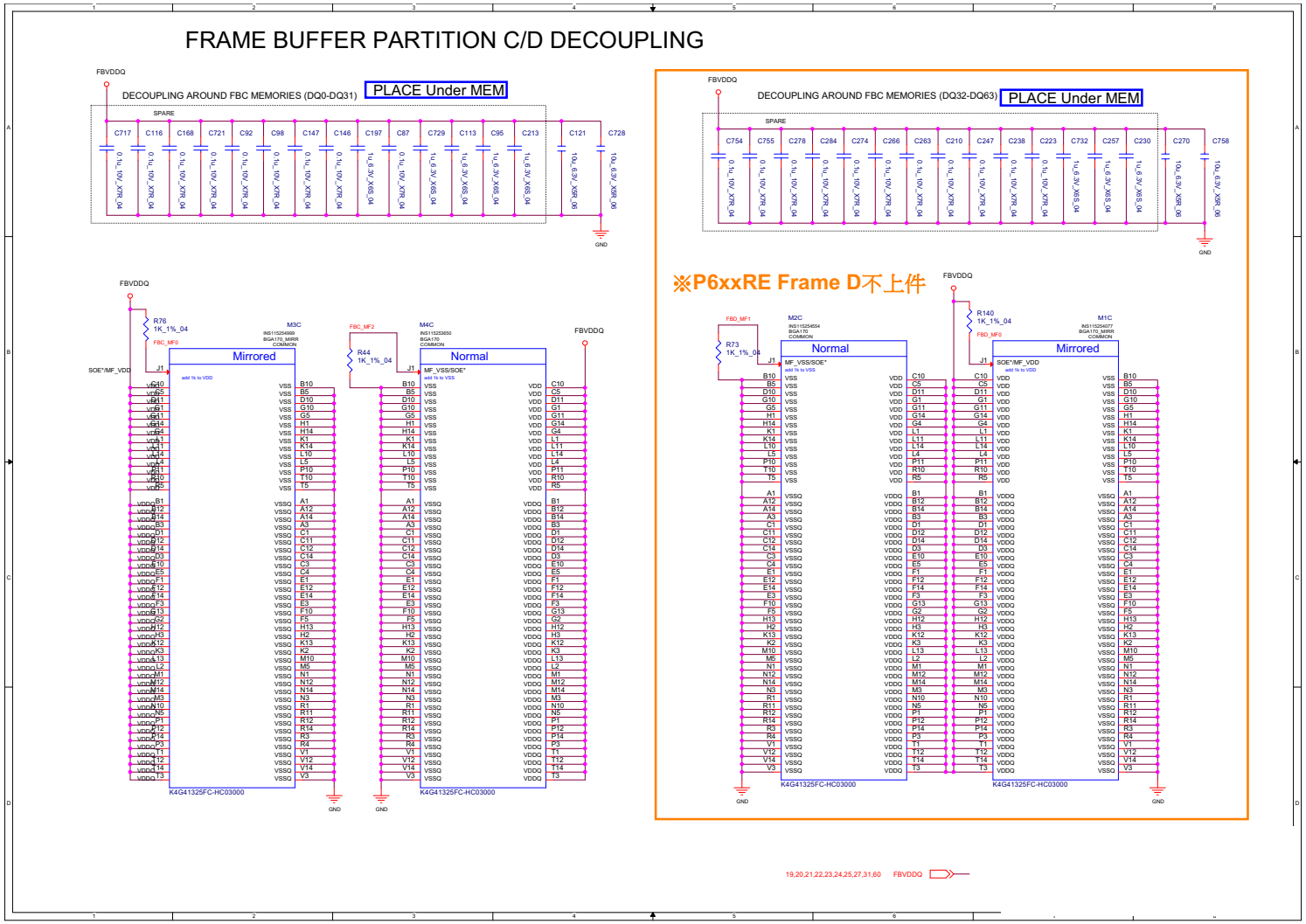

Sheet 26 of 79
Frame Buffer
Partition C_D

GPU Decoupling

Sheet 27 of 79
GPU Decoupling

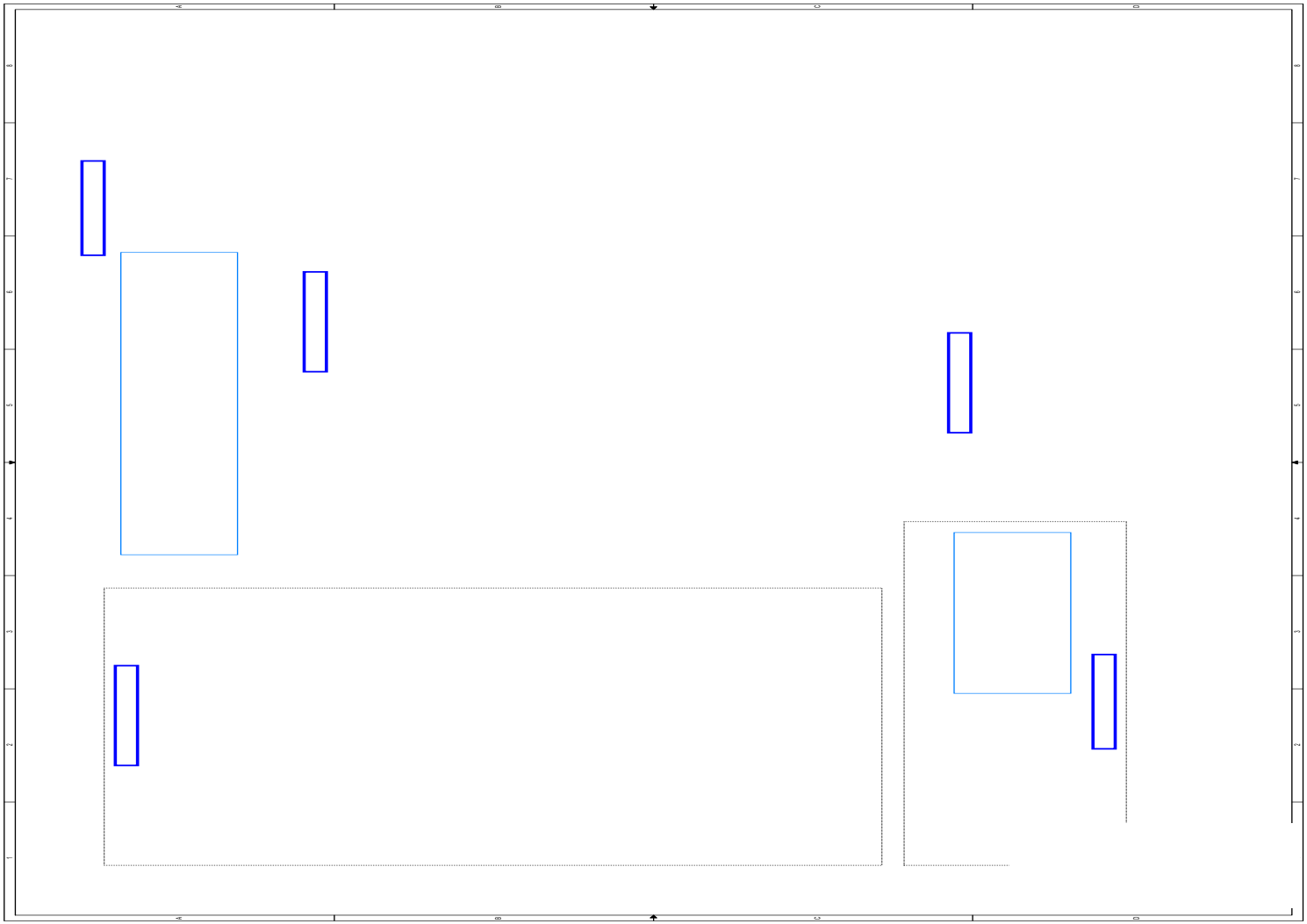

DACA Interface & XTAL

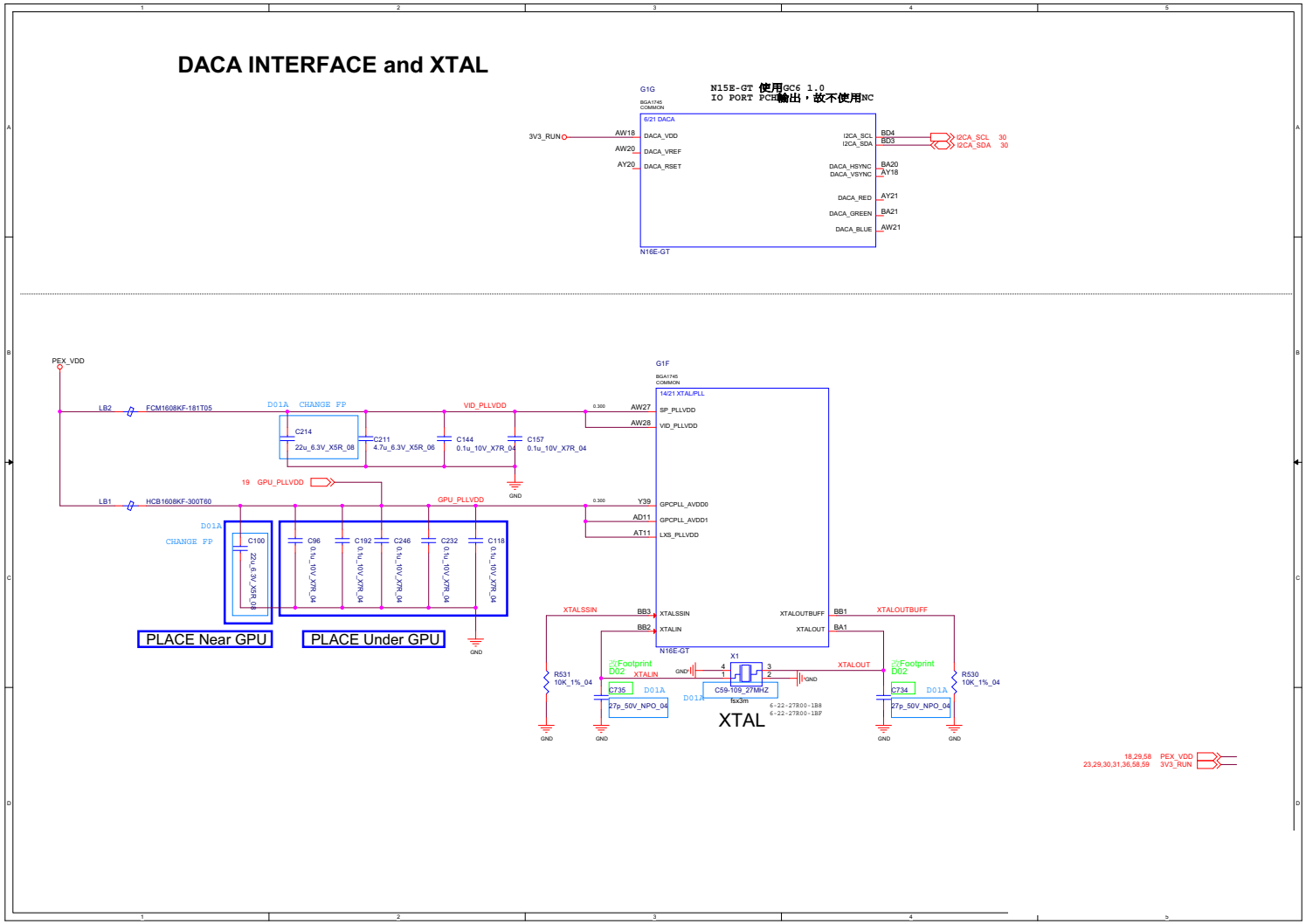

Sheet 28 of 79
DACA Interface and XTAL

B.Schematic Diagrams

IFP I/O Interface

Sheet 29 of 79
IFP I/O Interface

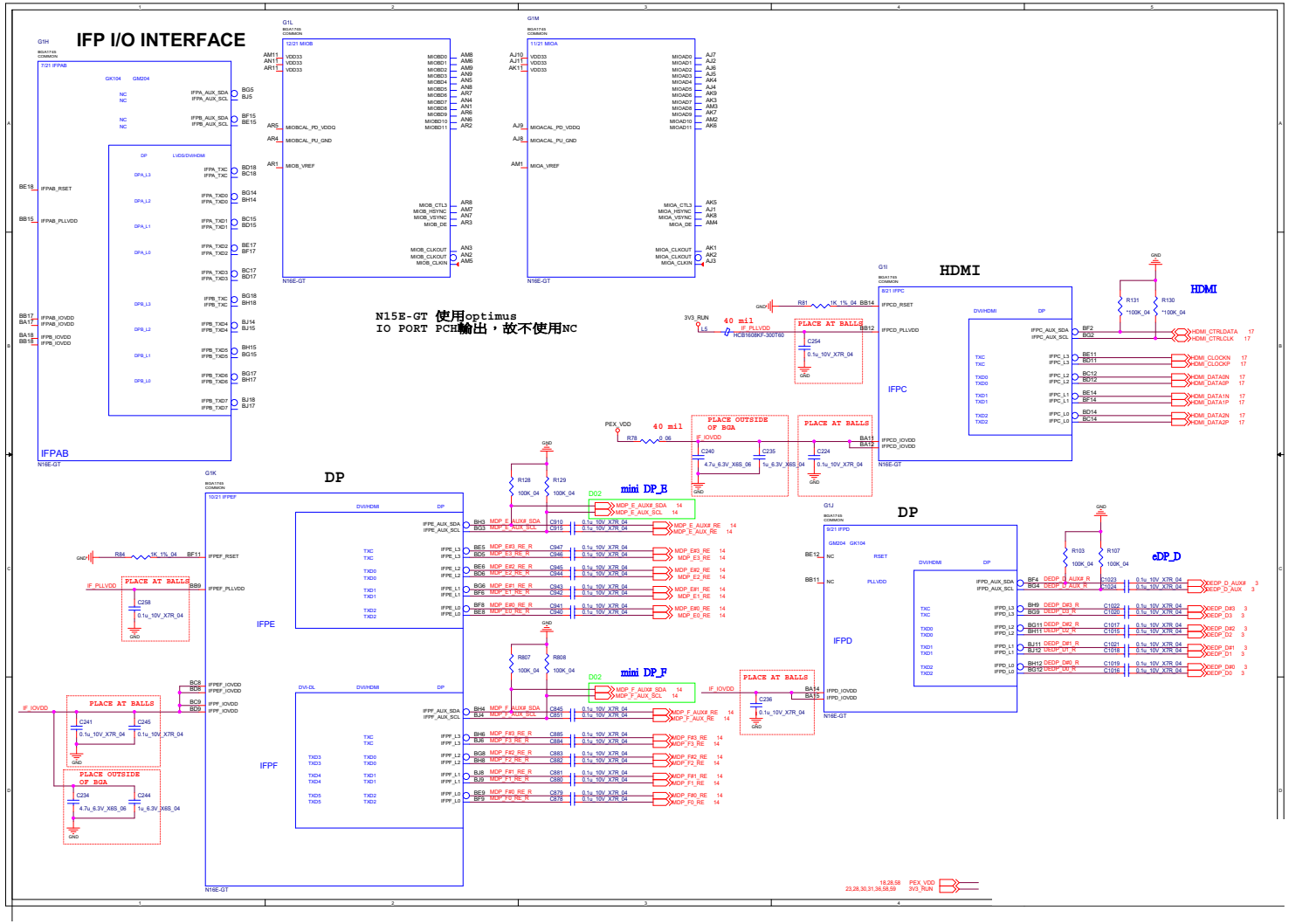

Misc - GPIO, I2C and ROM

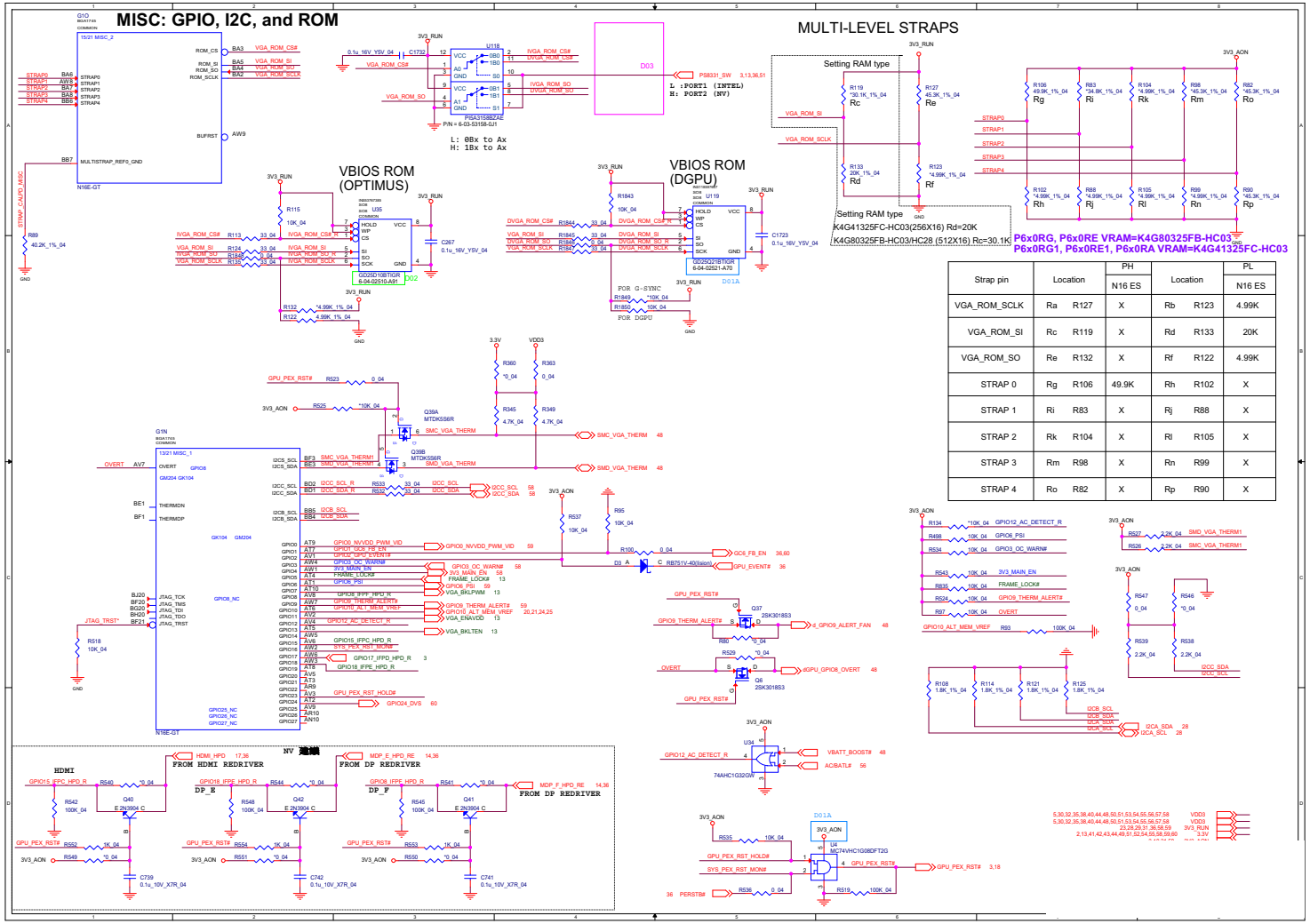

Strap pin	Location		PH N16 ES	Location		PL N16 ES
VGA_ROM_SCLK	Ra	R127	X	Rb	R123	4.99K
VGA_ROM_SI	Rc	R119	X	Rd	R133	20K
VGA_ROM_SO	Re	R132	X	Rf	R122	4.99K
STRAP 0	Rg	R106	49.9K	Rh	R102	X
STRAP 1	Ri	R83	X	Rj	R88	X
STRAP 2	Rk	R104	X	Rl	R105	X
STRAP 3	Rm	R98	X	Rn	R99	X
STRAP 4	Ro	R82	X	Rp	R90	X

Sheet 30 of 79
Misc - GPIO, I2C and ROM

GPU NVVDD, FBVDDQ, and GND

Sheet 31 of 79
GPU NVVDD, FBVDDQ, GND

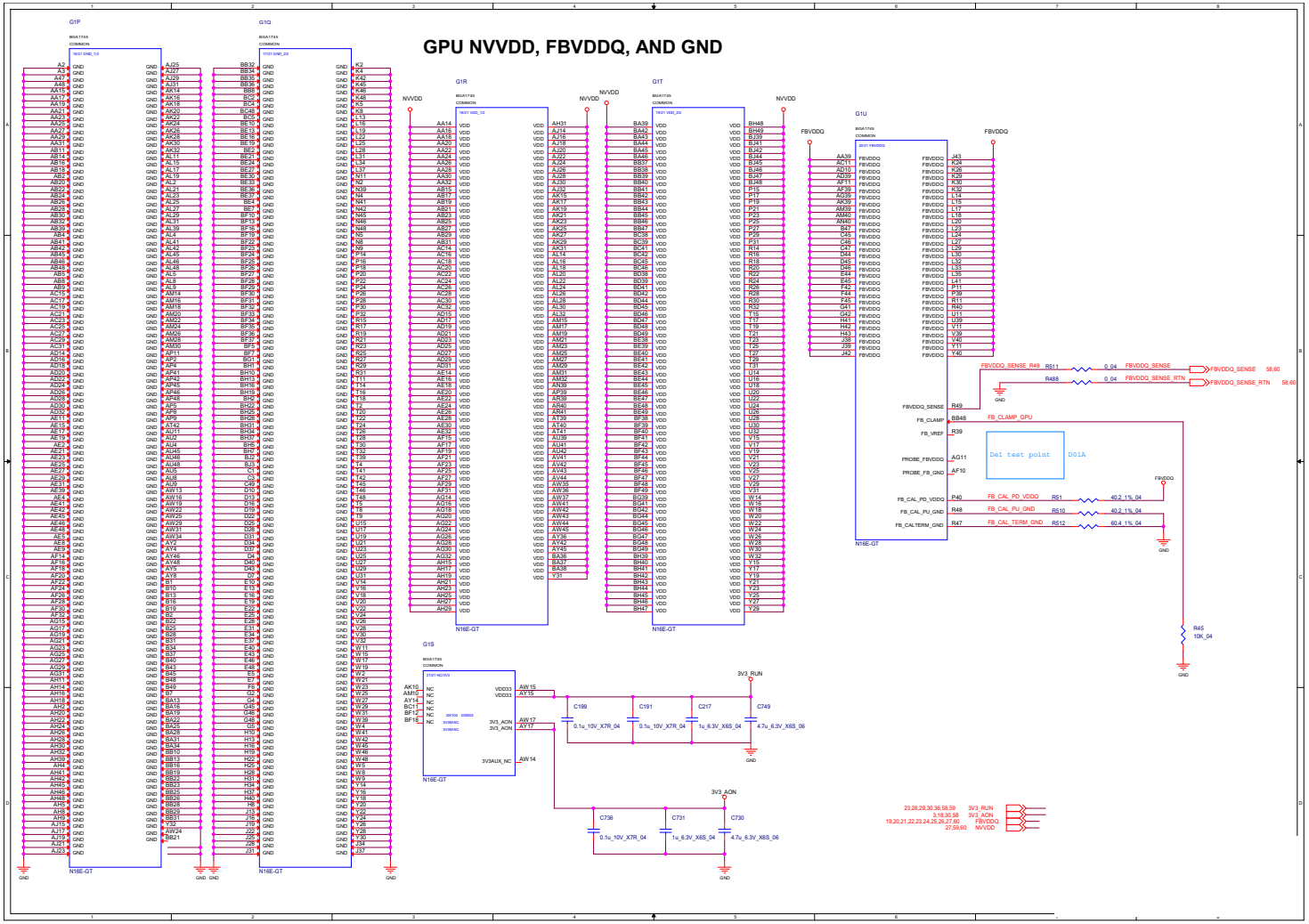

PCH 1/9

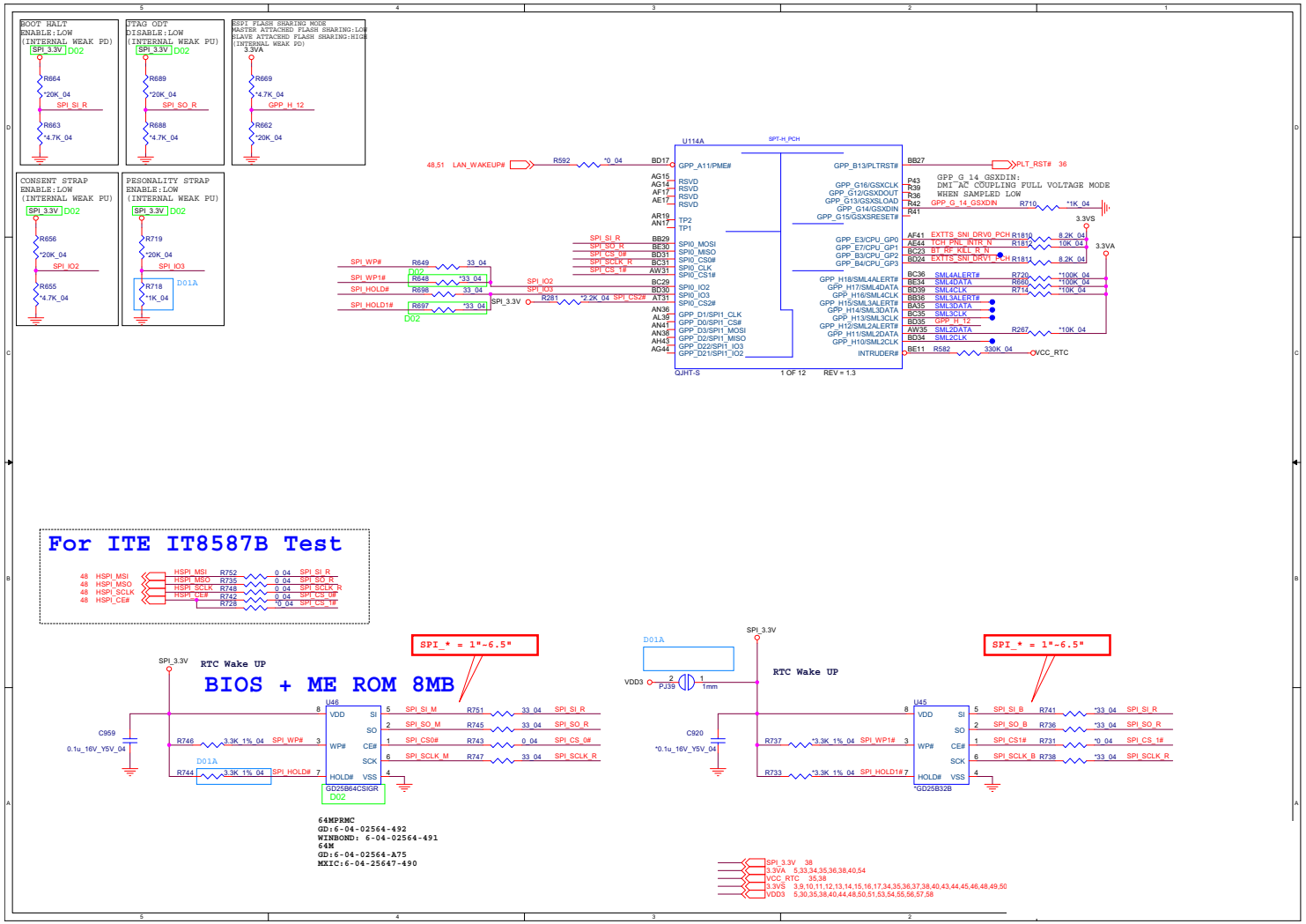

Sheet 32 of 79
PCH 1/9

PCH 2/9

Sheet 33 of 79
PCH 2/9

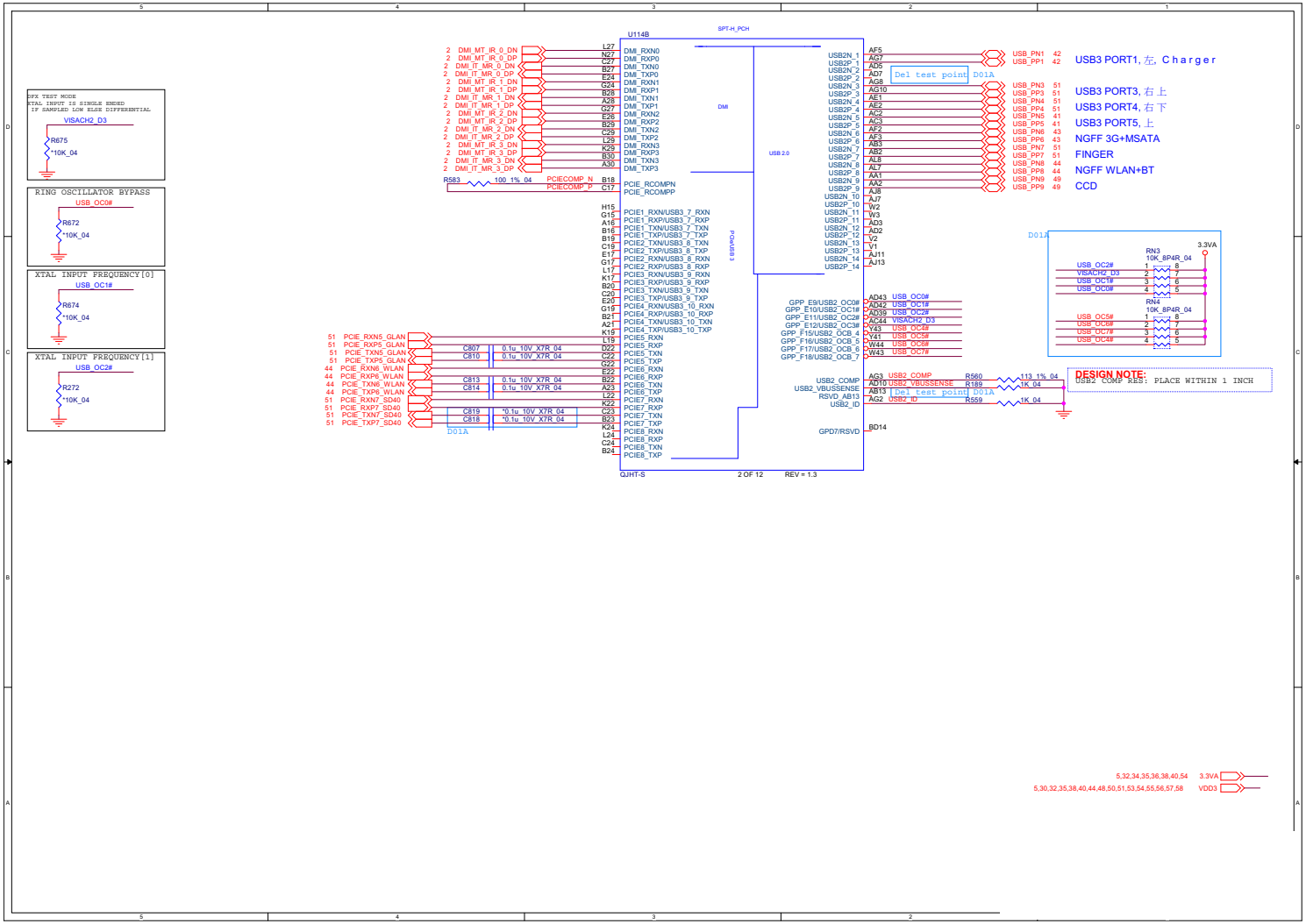

PCH 3/9

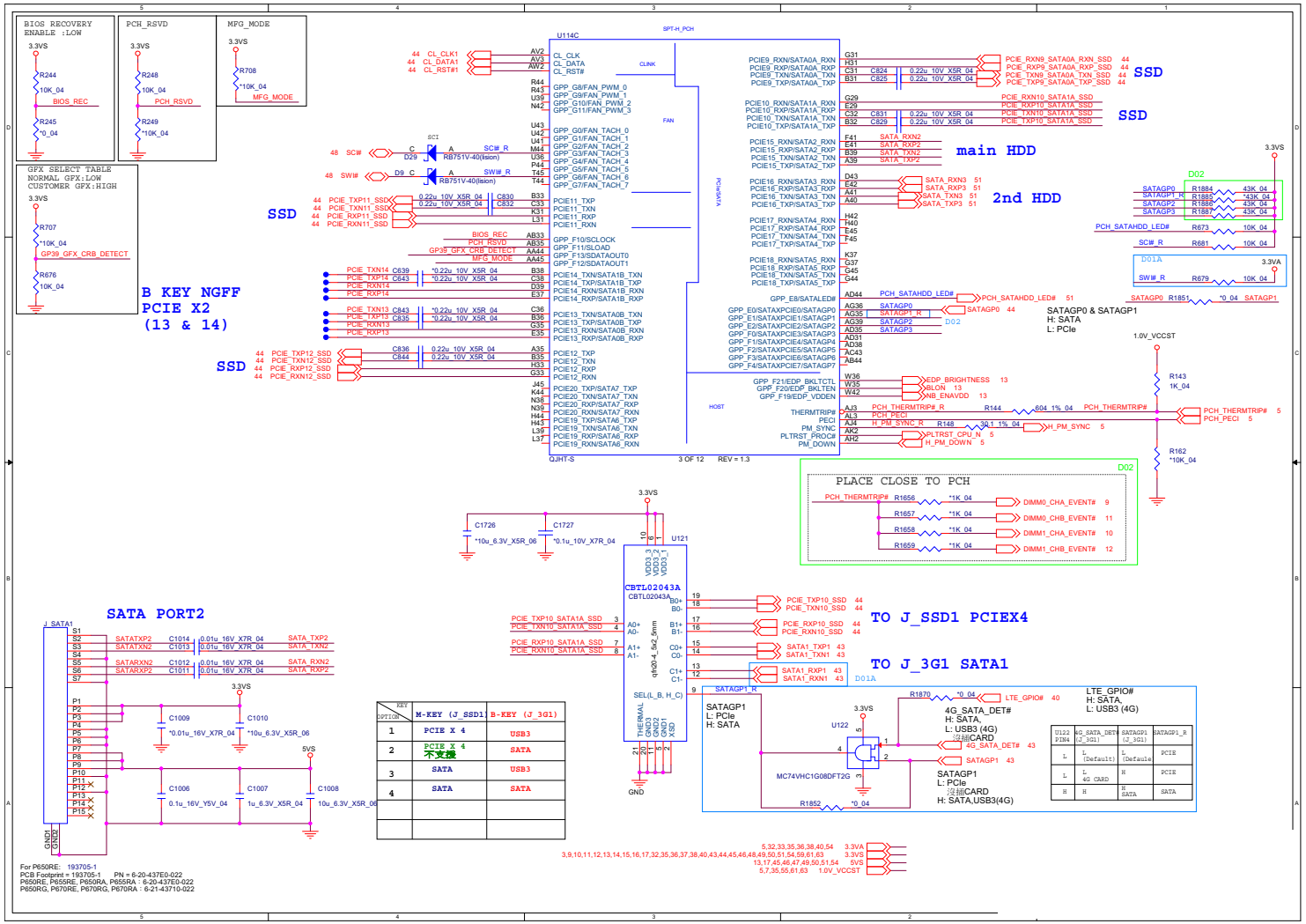

KEY OPTION	M-KEY (J_SSD1)	B-KEY (J_3G1)
1	PCIE X 4	USB3
2	PCIE X 4 不支援	SATA
3	SATA	USB3
4	SATA	SATA

U122 PIN4	4G_SATA_DET# (J_3G1)	SATAGP1 (J_3G1)	SATAGP1_R
L	L (Default)	L (Defaule	PCIE
L	L 4G CARD	H	PCIE
H	H	H SATA	SATA

Sheet 34 of 79
PCH 3/9

PCH 4/9

Sheet 35 of 79
PCH 4/9

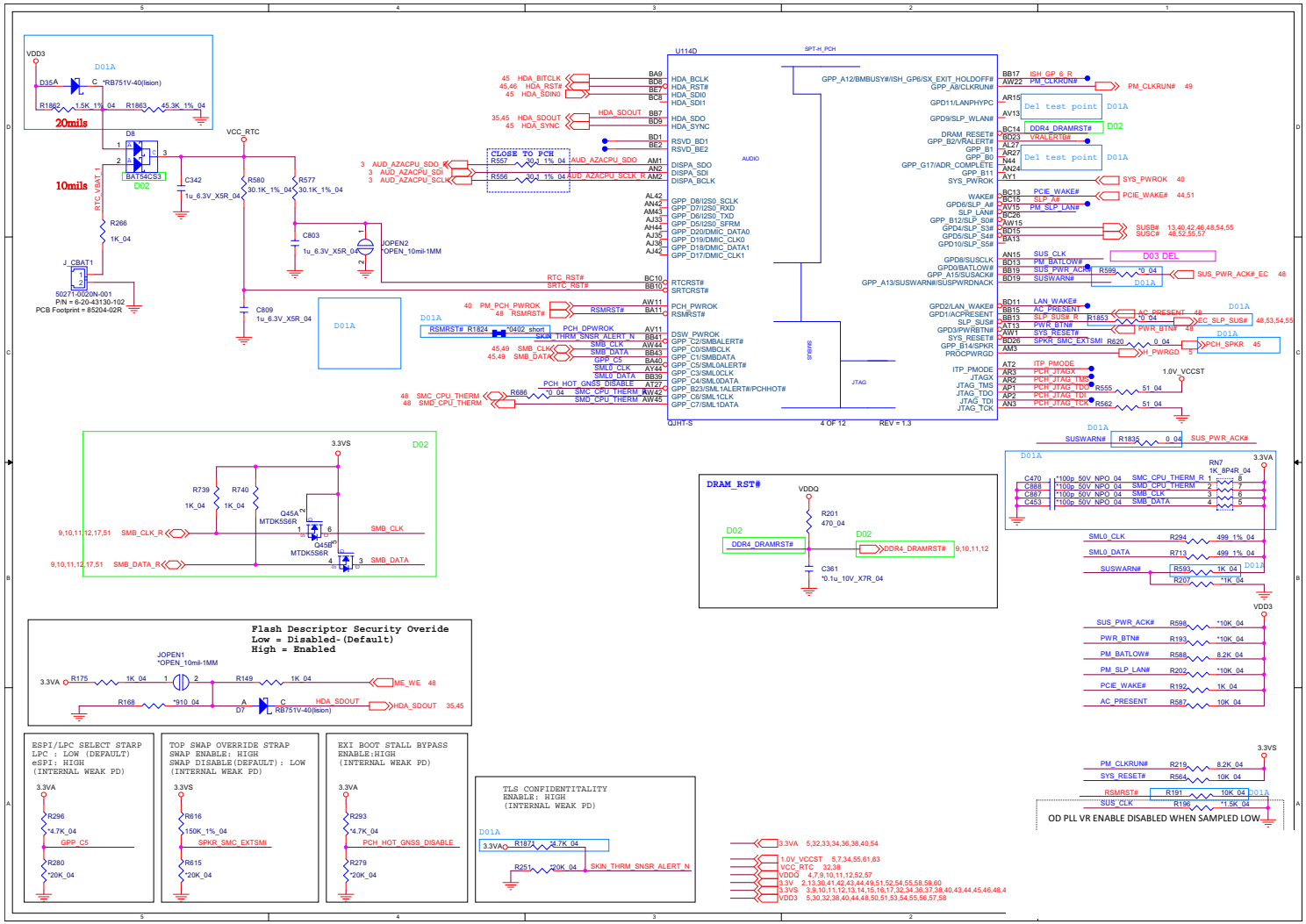

PCH 5/9

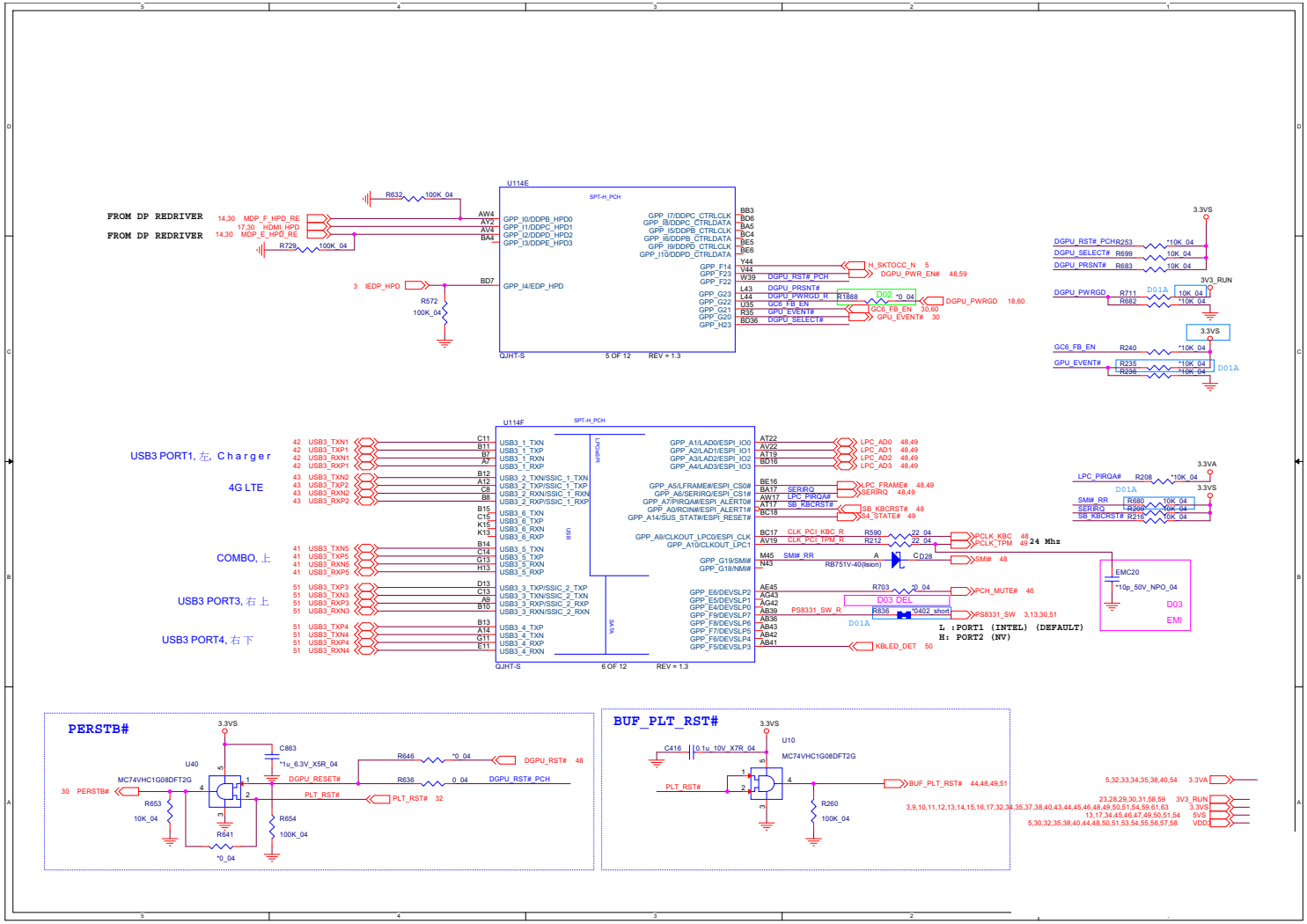

Sheet 36 of 79
PCH 5/9

PCH 6/9

Sheet 37 of 79
PCH 6/9

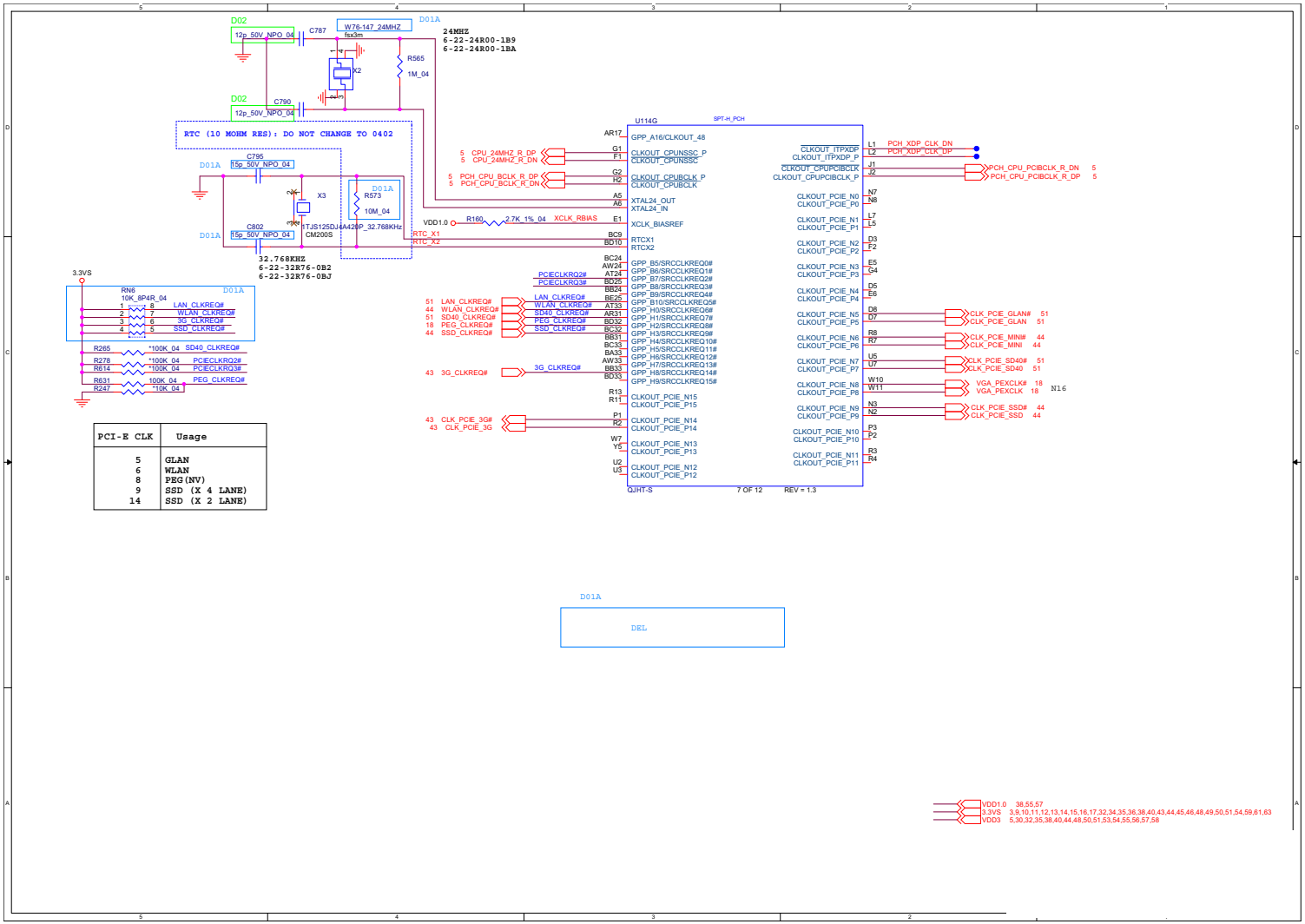

PCI-E CLK	Usage
5	GLAN
6	WLAN
8	PEG(NV)
9	SSD (X 4 LANE)
14	SSD (X 2 LANE)

PCH 7/9

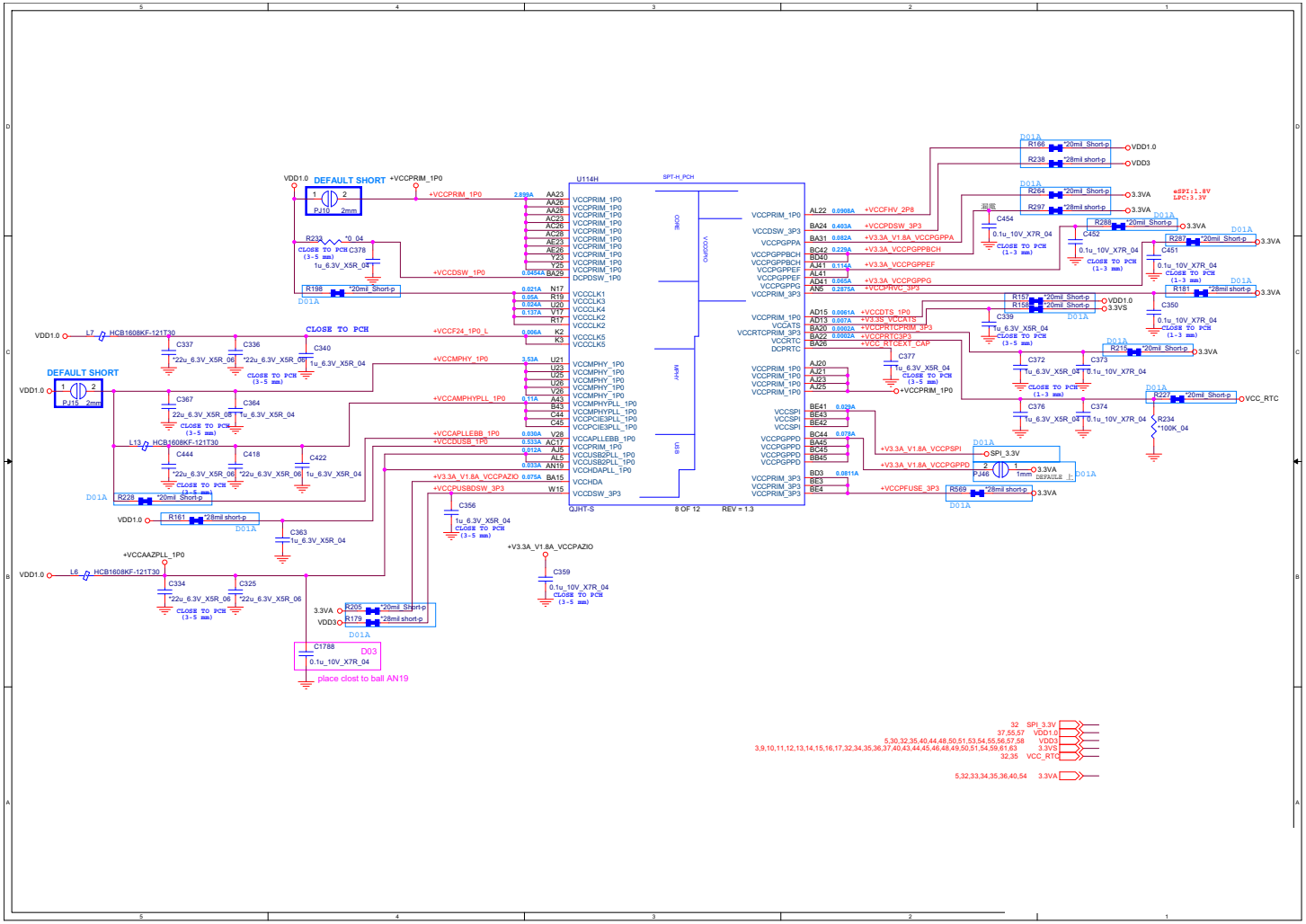

Sheet 38 of 79
PCH 7/9

PCH 8/9

Sheet 39 of 79
PCH 8/9

PCH 9/9

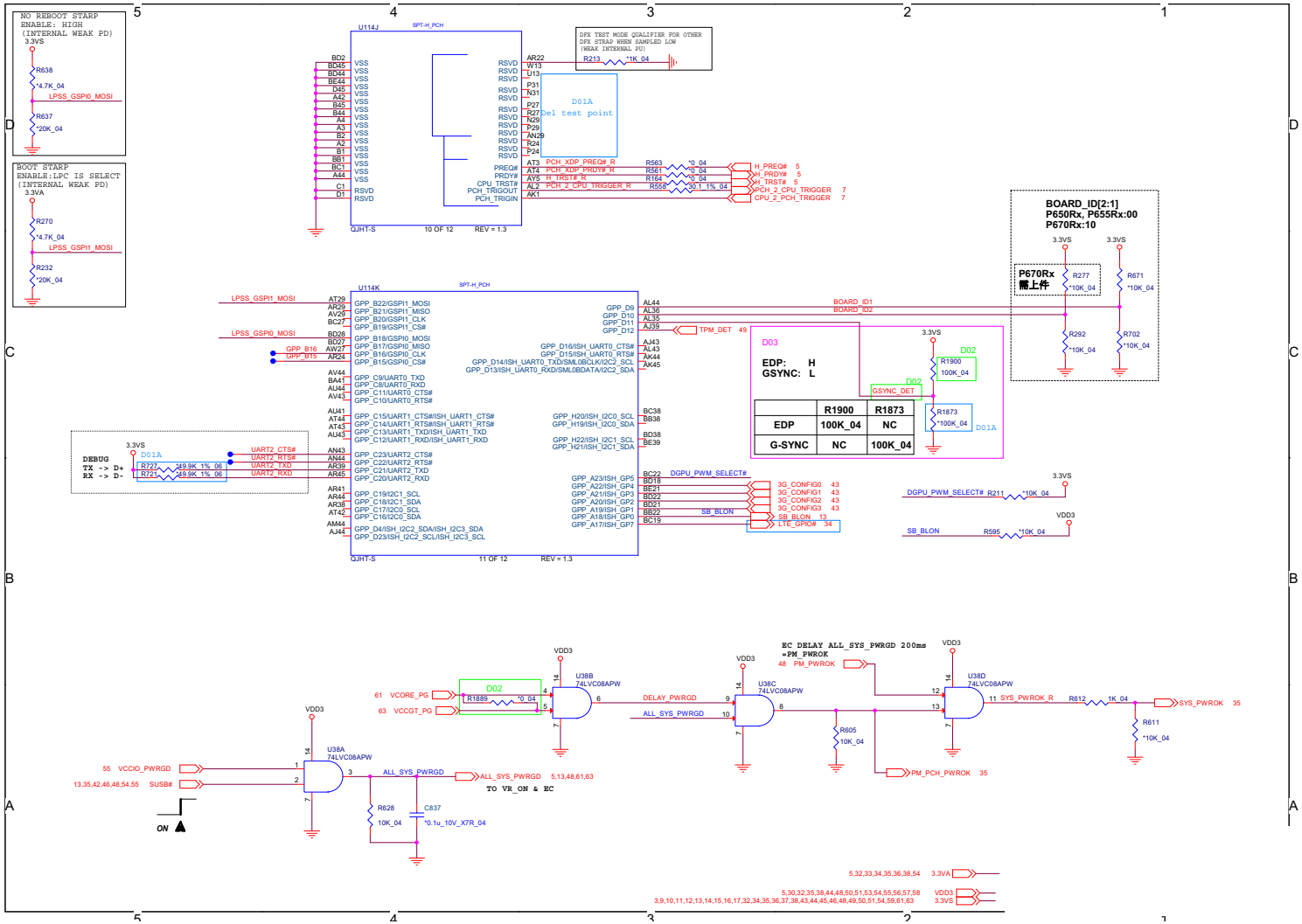

Sheet 40 of 79
PCH 9/9

USB3.0

Sheet 41 of 79
USB3.0

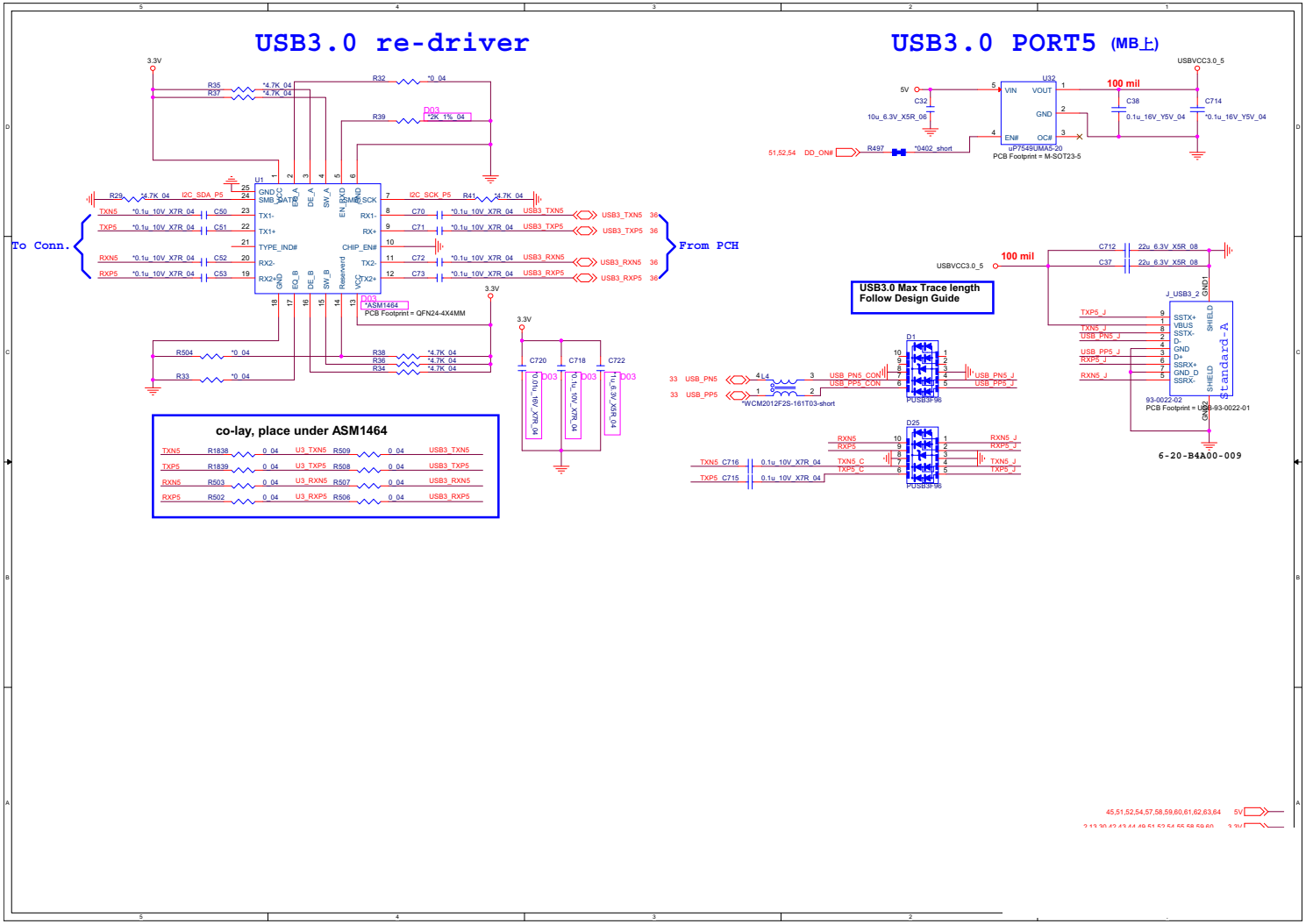

USB Charger

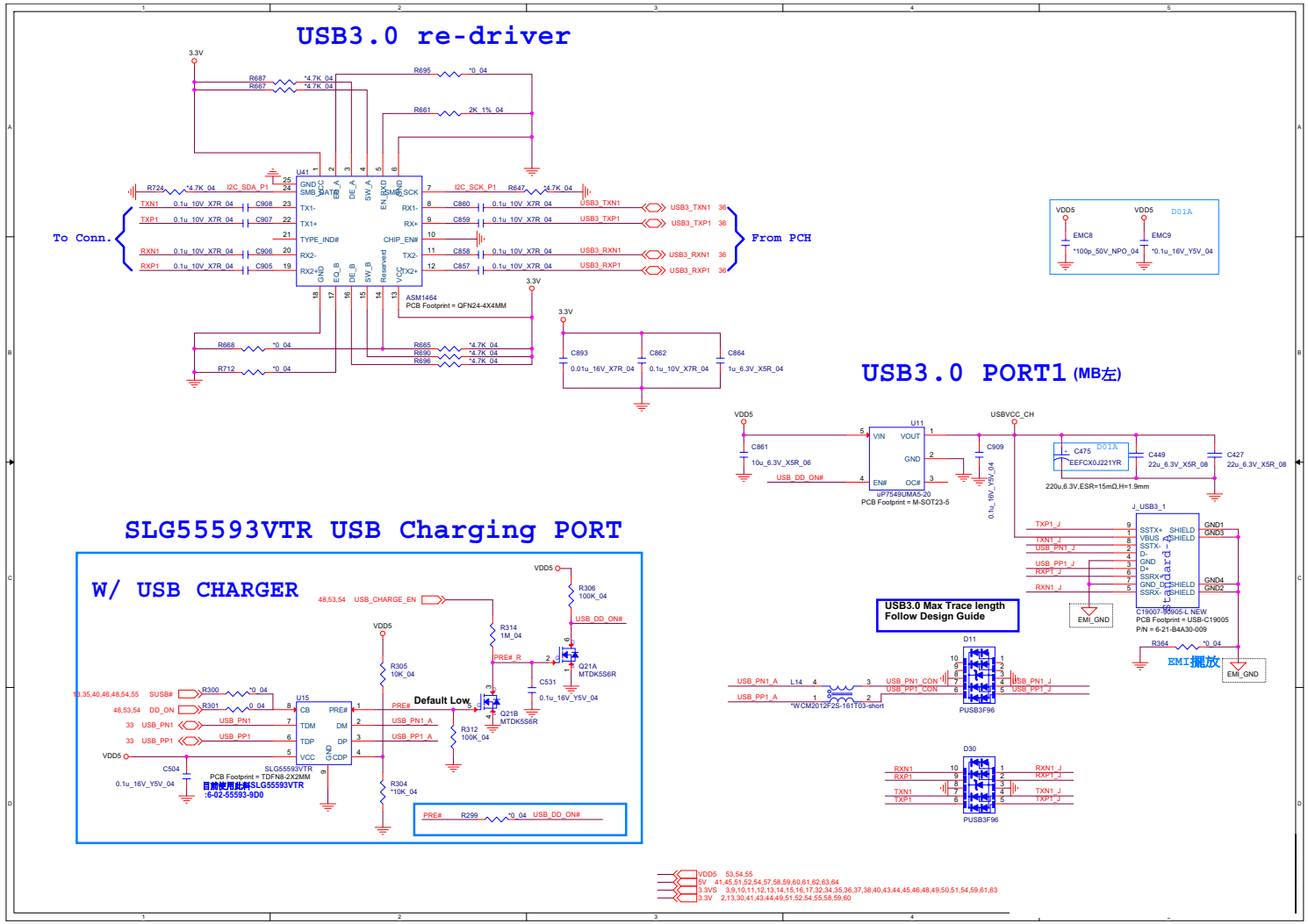

Sheet 42 of 79
USB Charger

M.2 3G + M.2 SATA

Sheet 43 of 79
M.2 3G + M.2 SATA

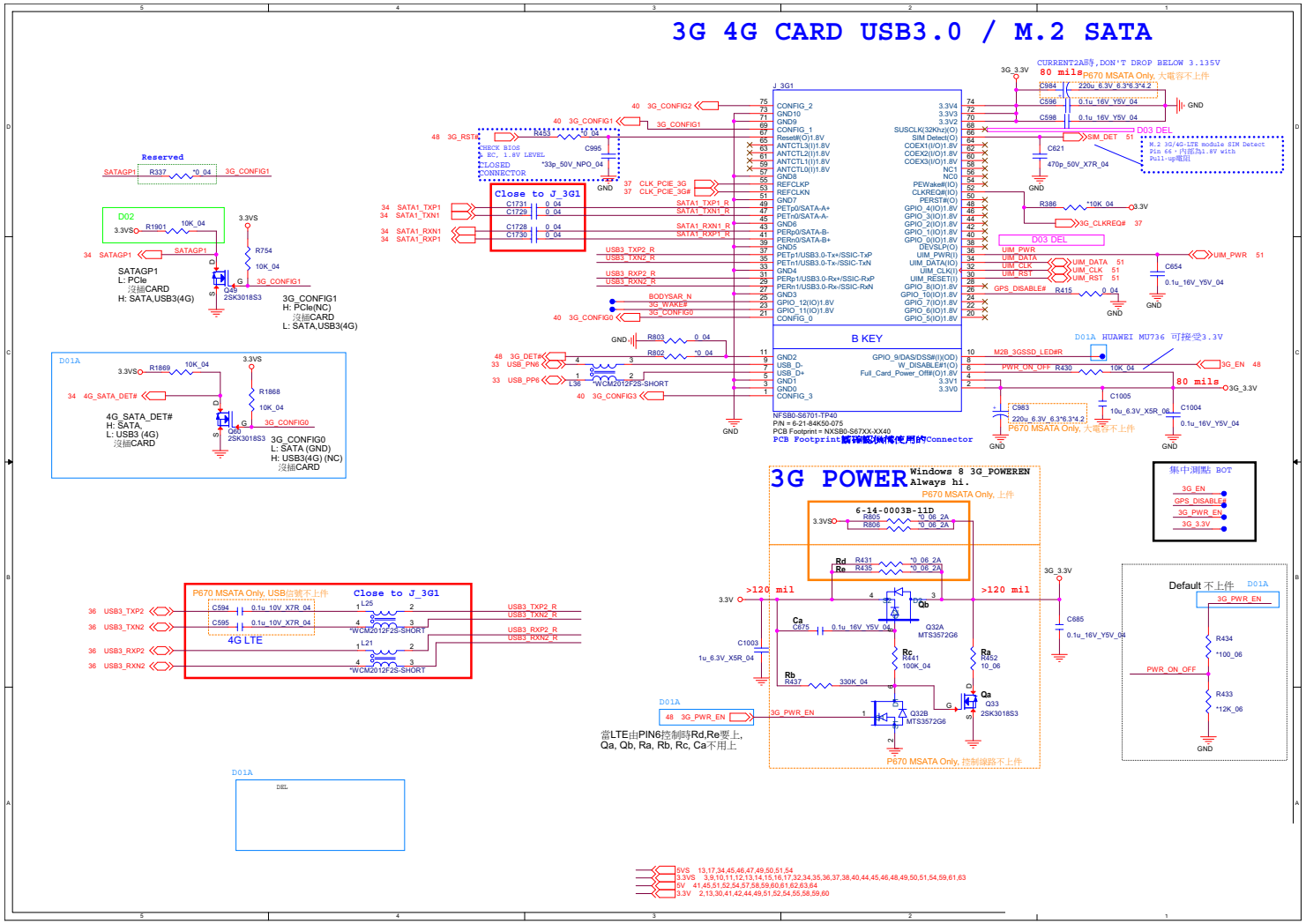

M.2 WLAN+BT, PCIE4X SSD

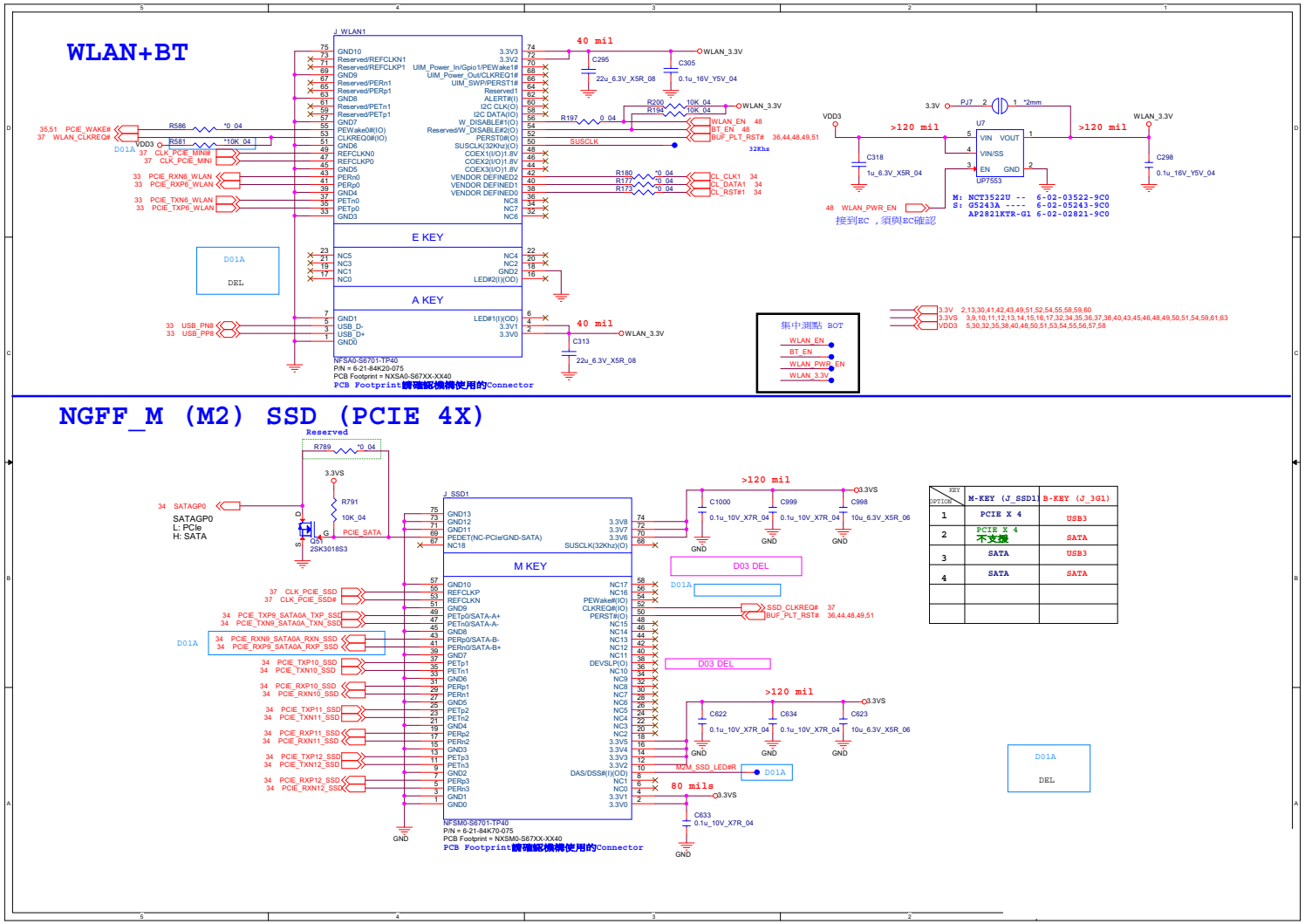

KEY / OPTION	M-KEY (J_SSD1)	B-KEY (J_3G1)
1	PCIE X 4	USB3
2	PCIE X 4 不支援	SATA
3	SATA	USB3
4	SATA	SATA

Sheet 44 of 79
M.2 WLAN+BT,
PCIE4X SSD

B.Schematic Diagrams

Realtek ALC892

Sheet 45 of 79
Realtek ALC892

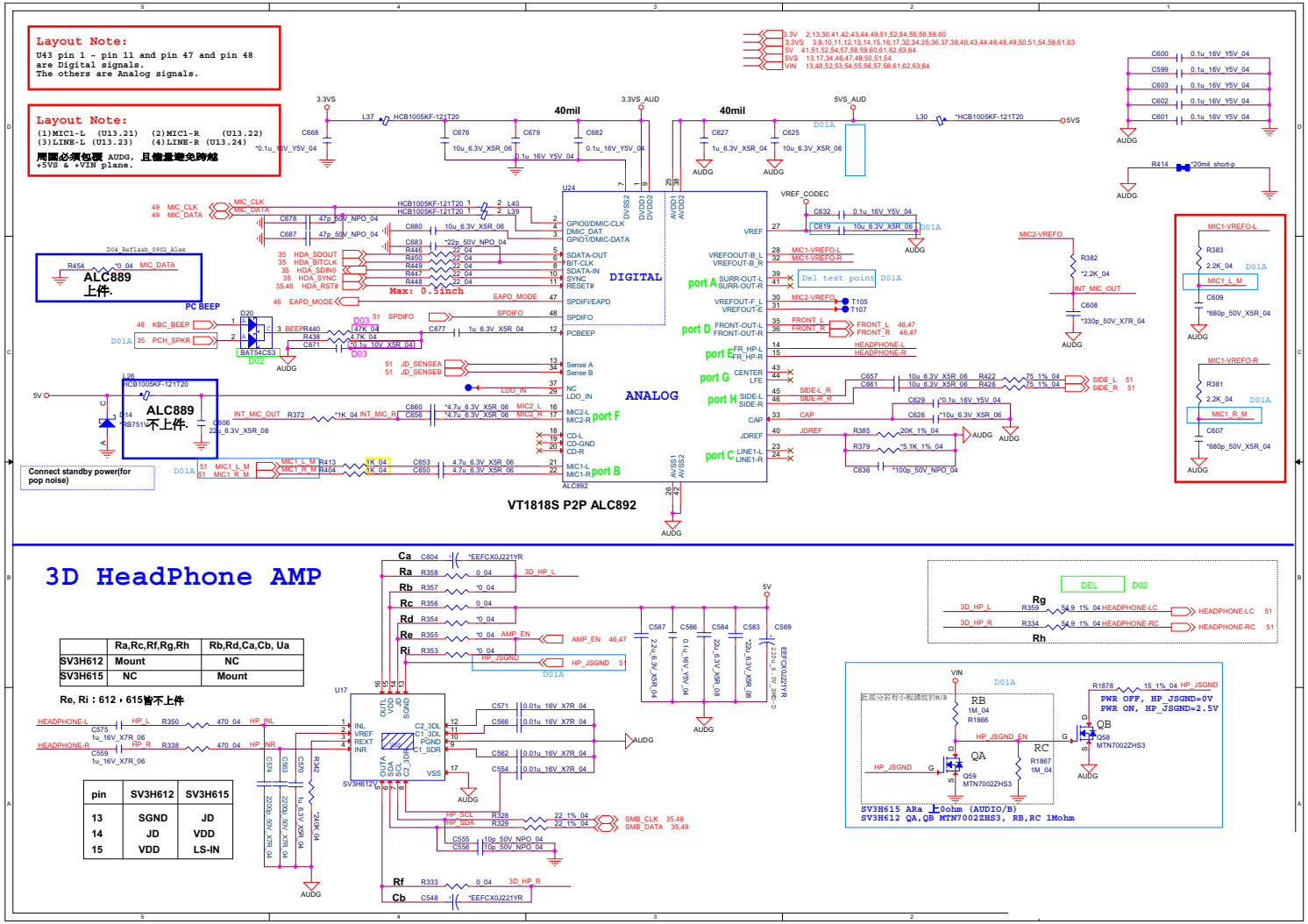

TPA2008D2

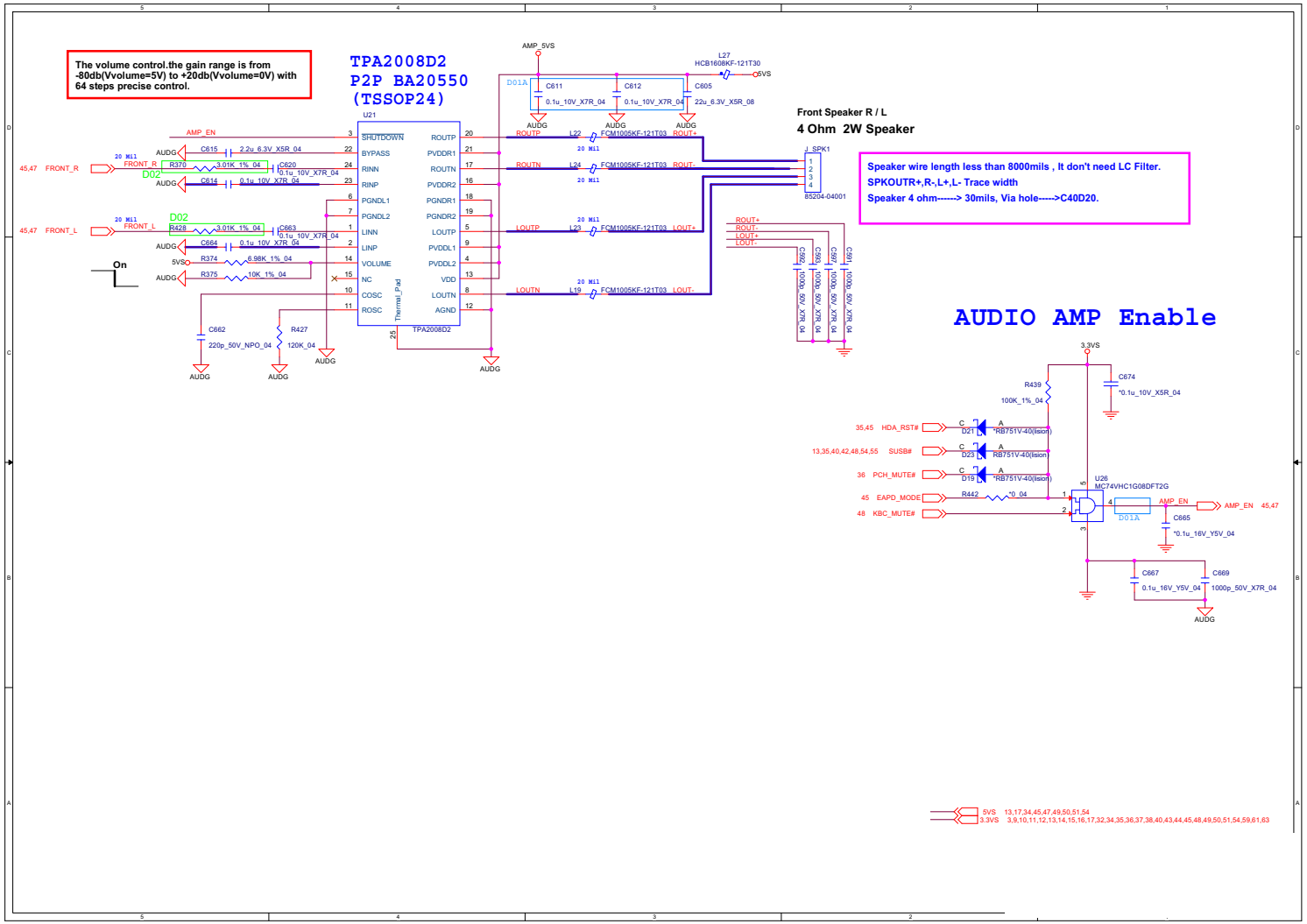

Sheet 46 of 79
TPA2008D2

Subwoofer

Sheet 47 of 79
Subwoofer

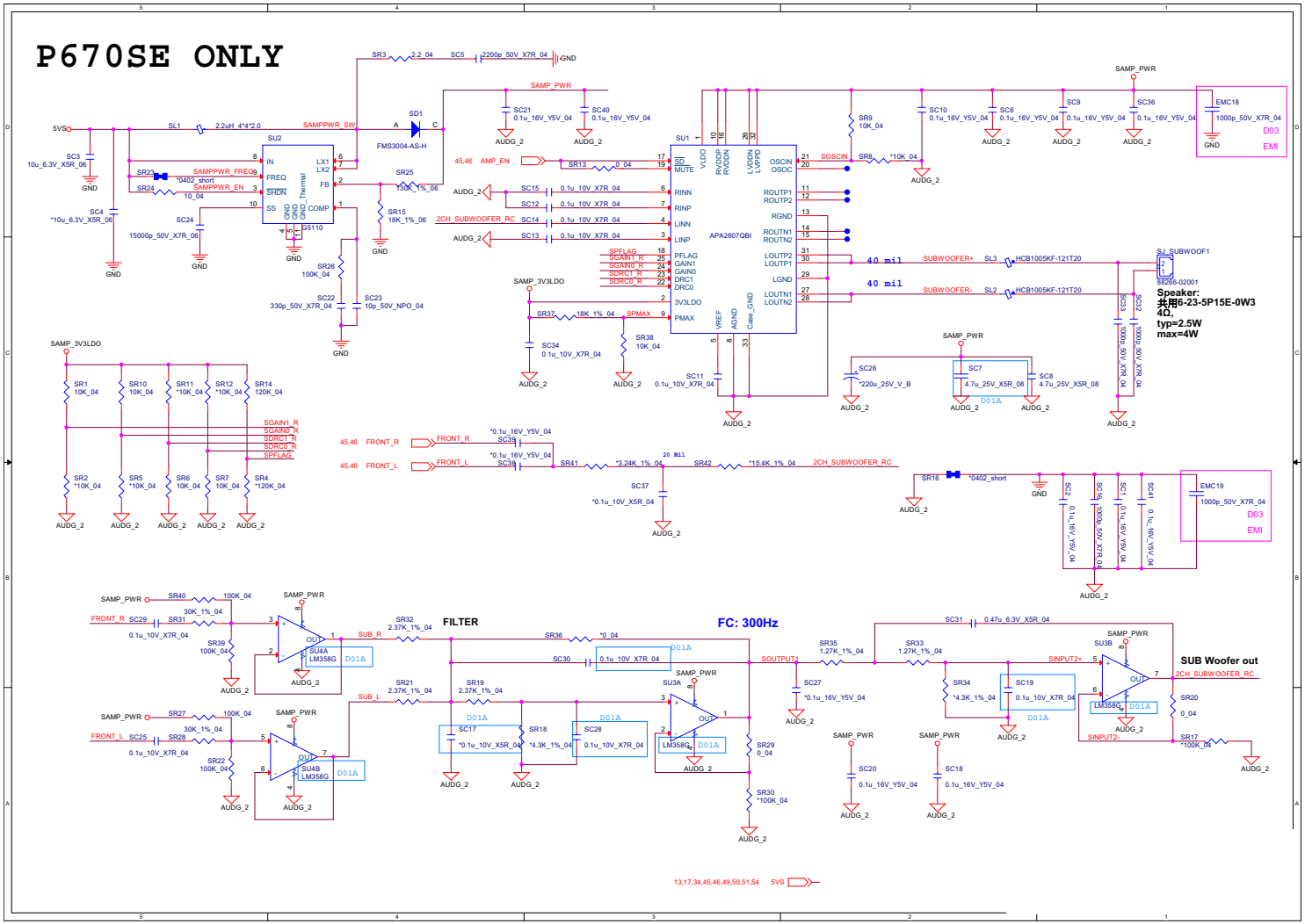

KBC-ITE IT8587

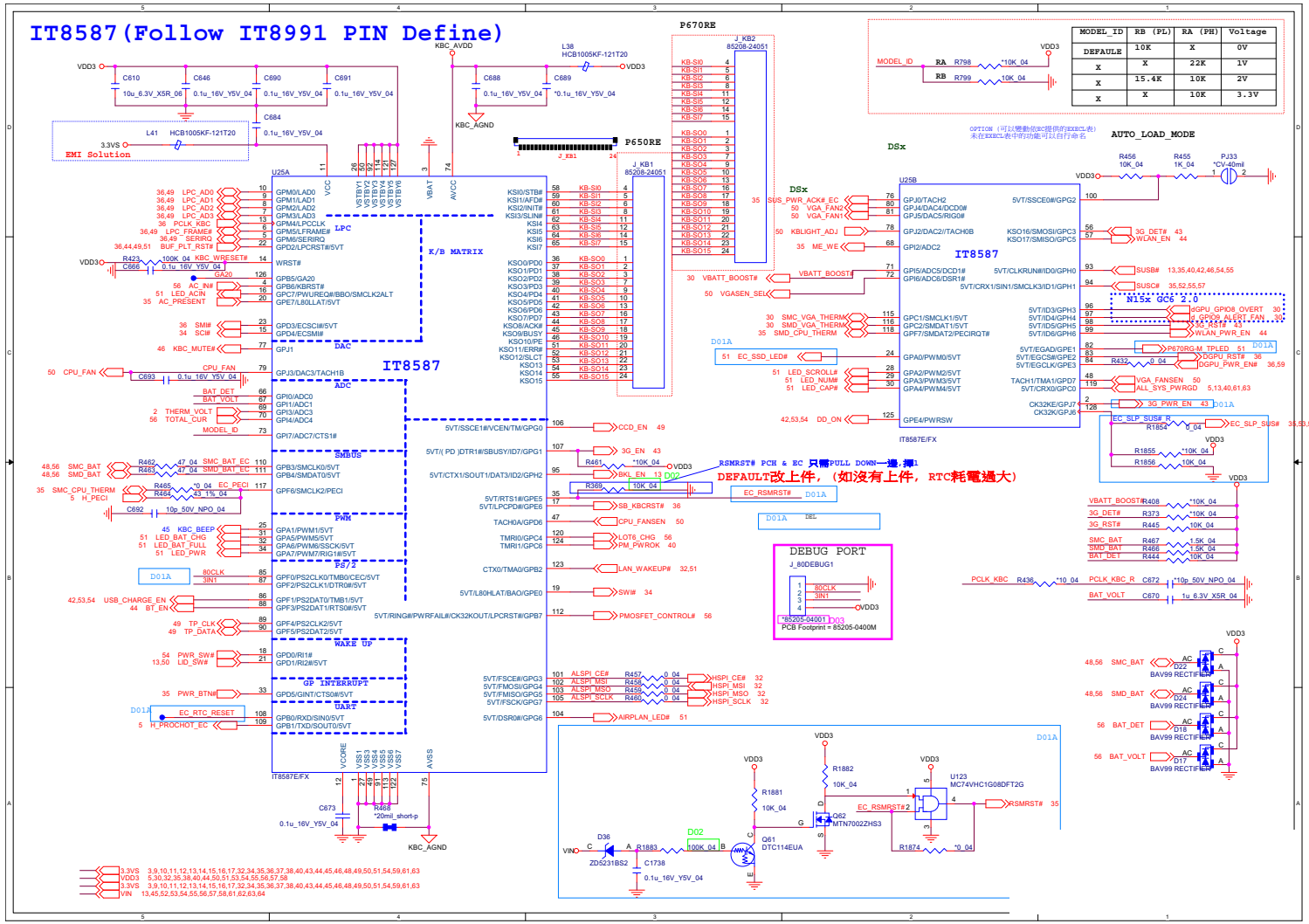

Sheet 48 of 79
KBC-ITE IT8587

TPM, CCD, TP

Sheet 49 of 79
TPM, CCD, TP

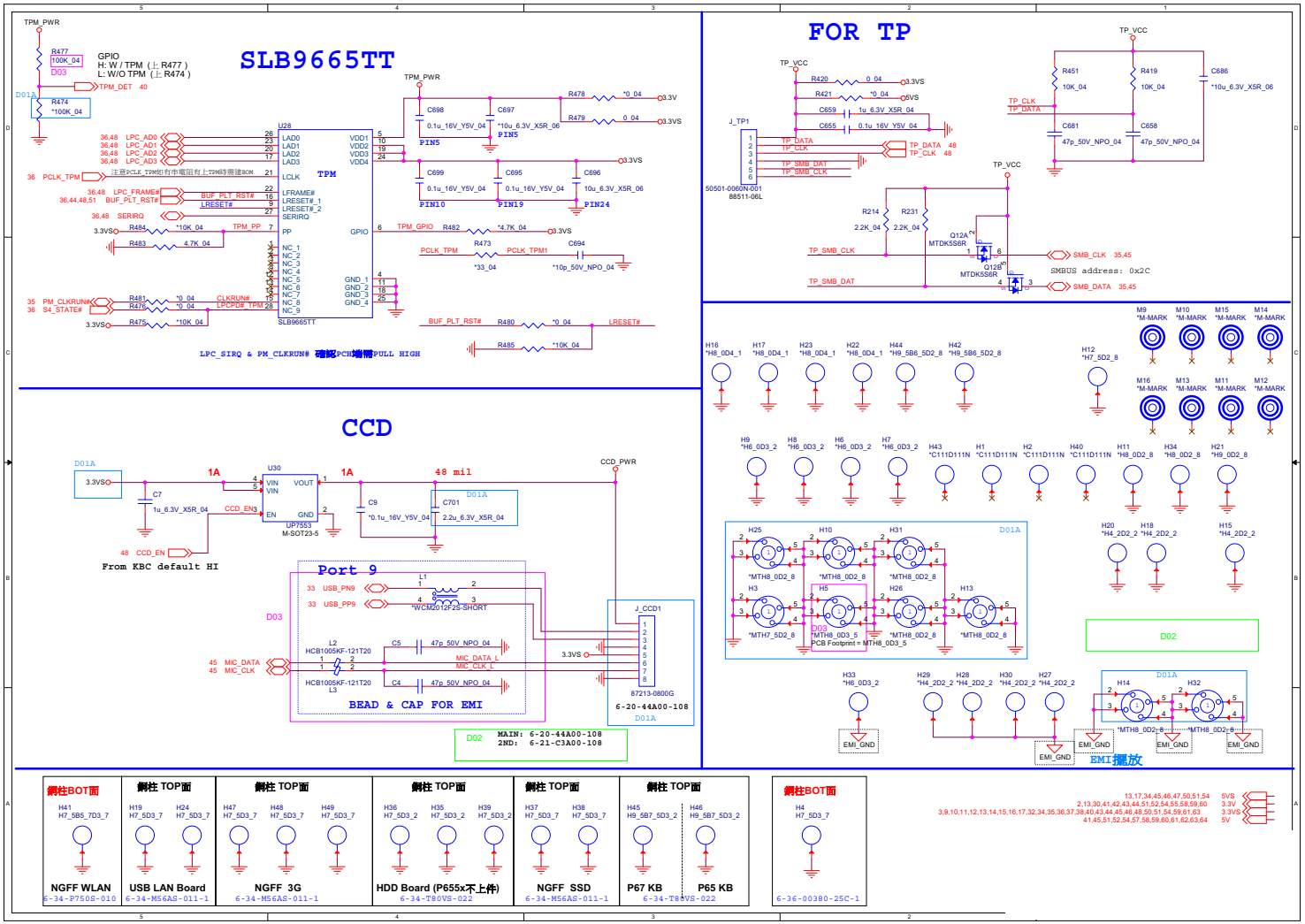

Fan, LID, KB, LED

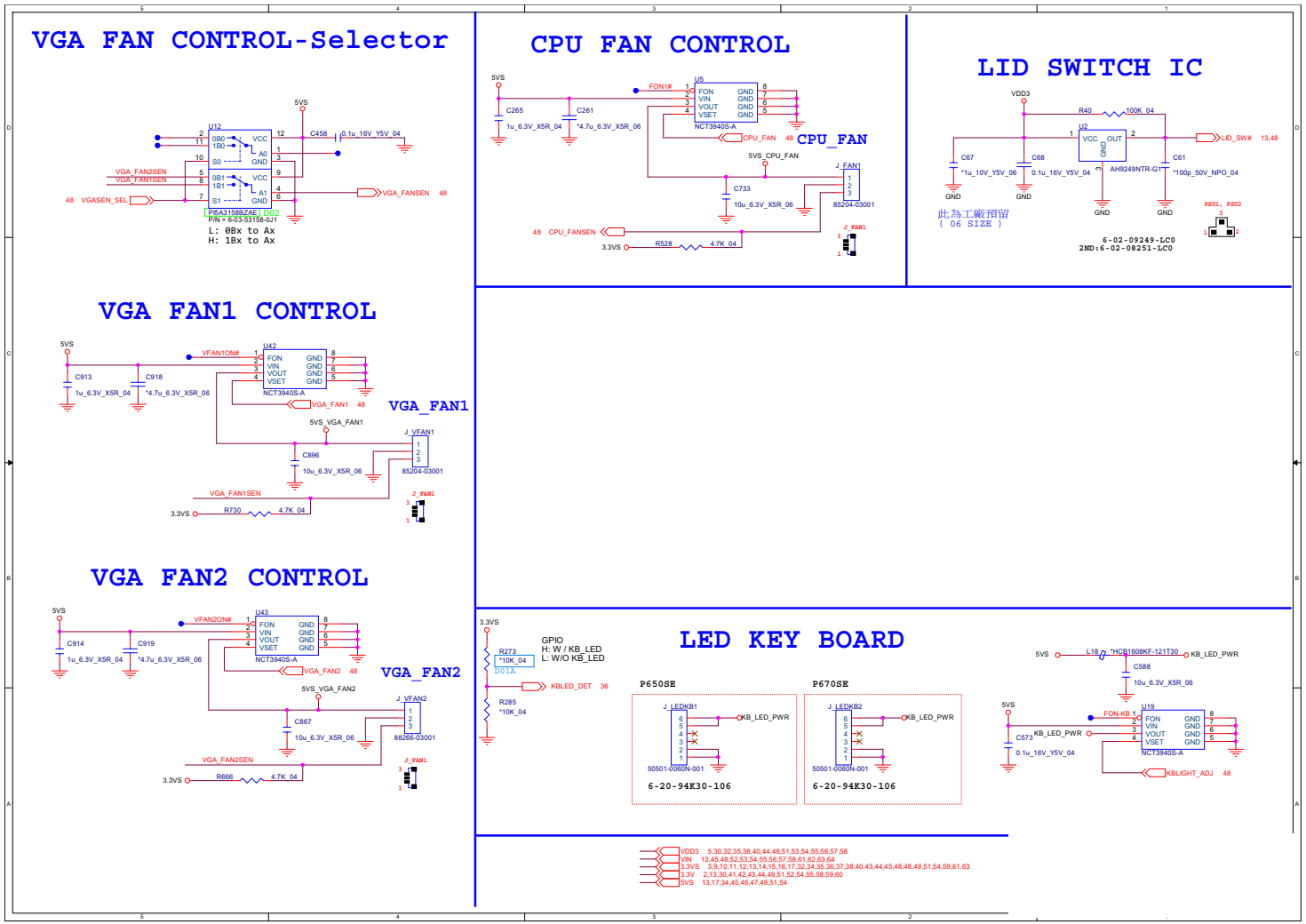

Sheet 50 of 79
Fan, LID, KB, LED

Connector

Sheet 51 of 79
Connector

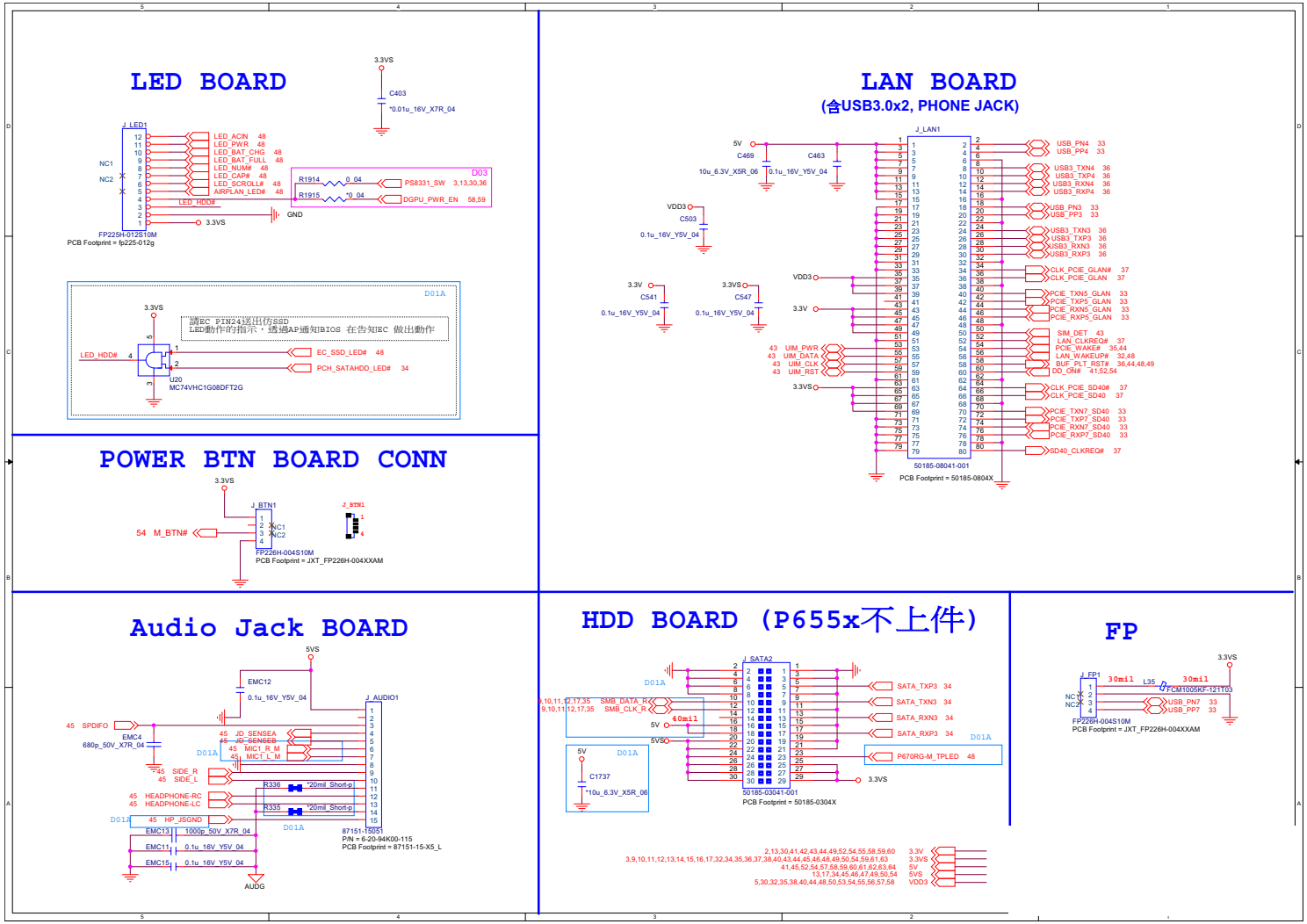

DDR 1.2V / 0.6VS

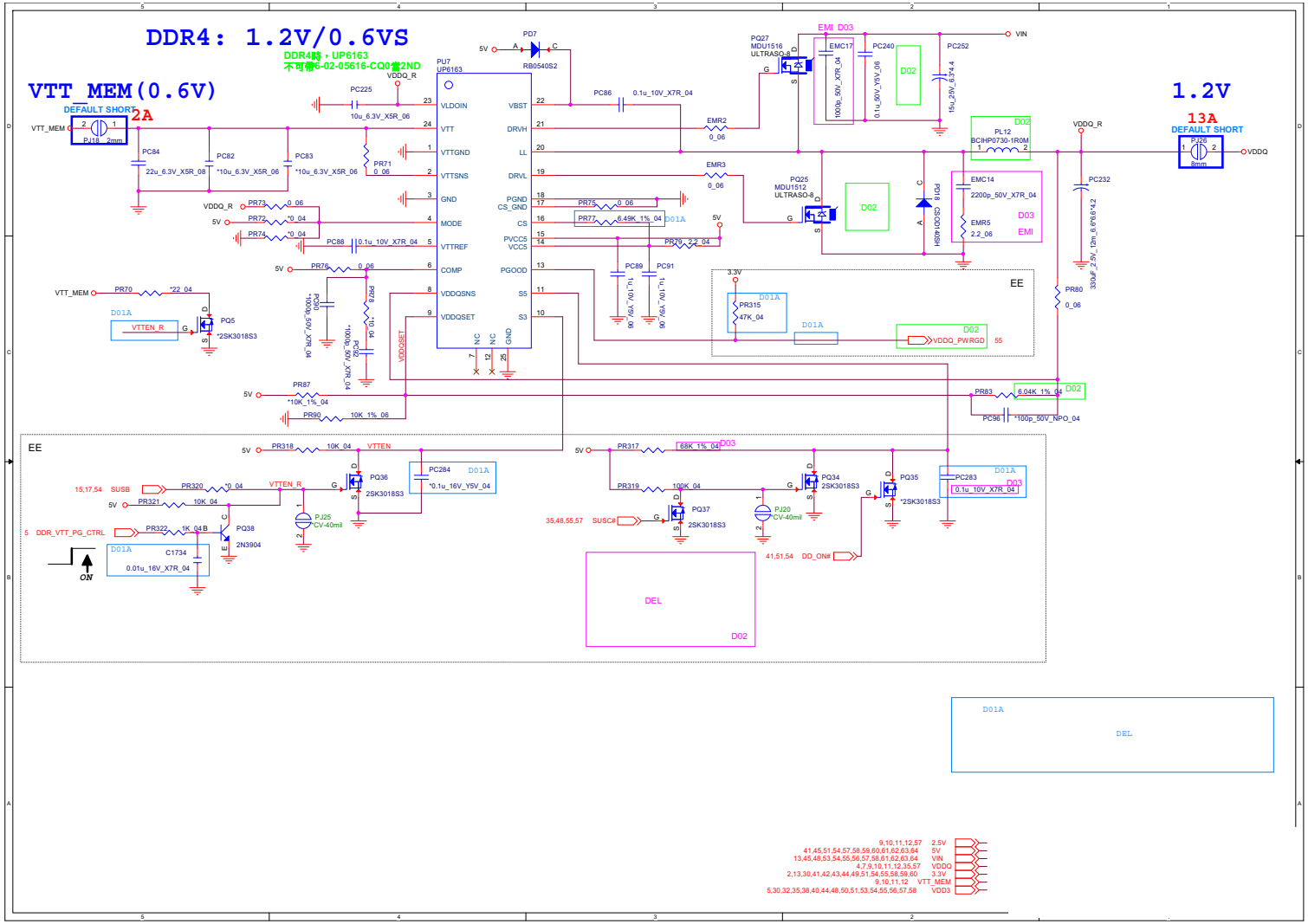

Sheet 52 of 79
DDR 1.2V / 0.6VS

VDD3, VDD5

Sheet 53 of 79
VDD3, VDD5

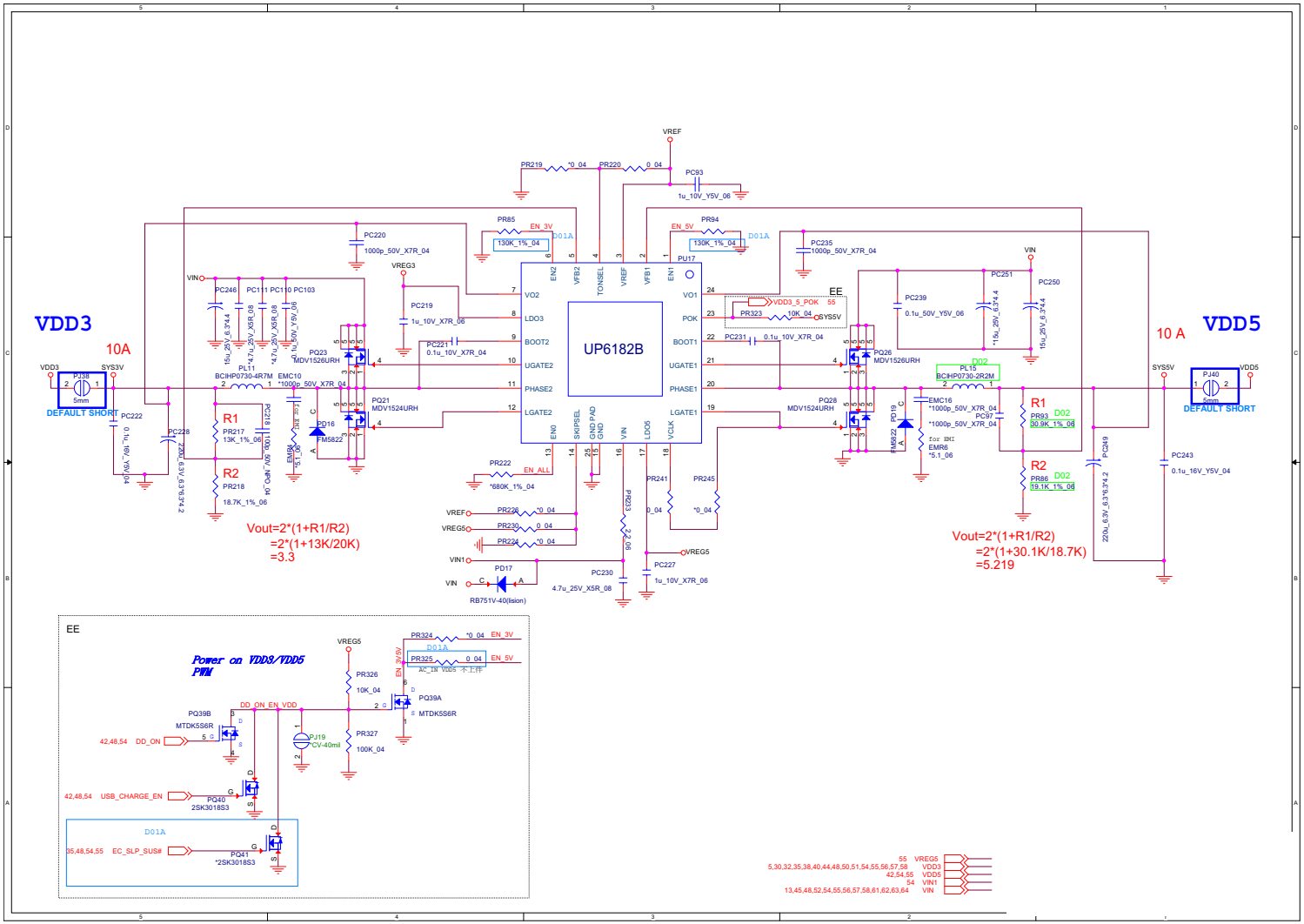

5V, 5VS, 3.3V, 3.3VS, 3.3VA

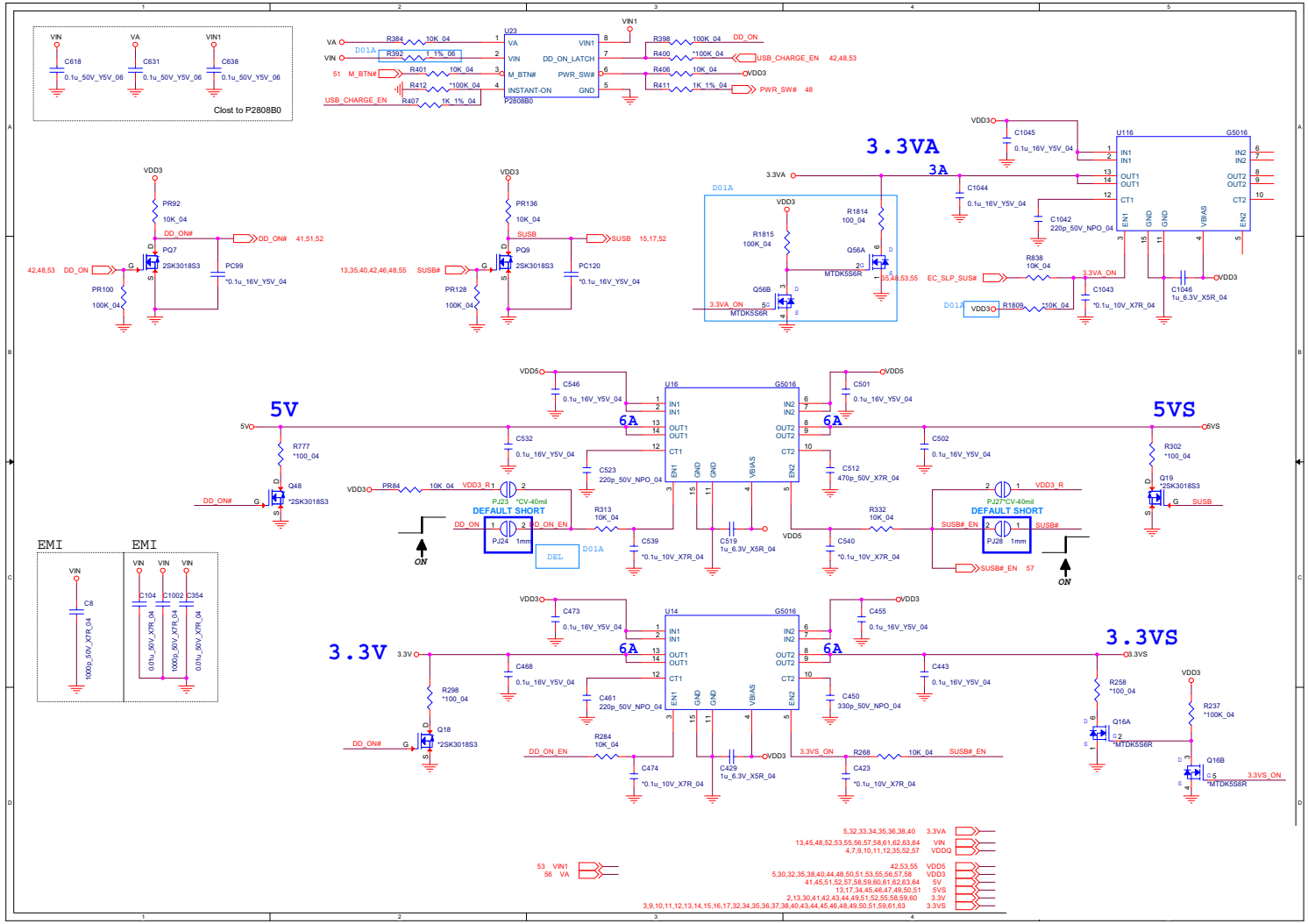

Sheet 54 of 79
5V, 5VS, 3.3V,
3.3VS, 3.3VA

Power 1.0V, VCCIO

Sheet 55 of 79
Power 1.0V, VCCIO

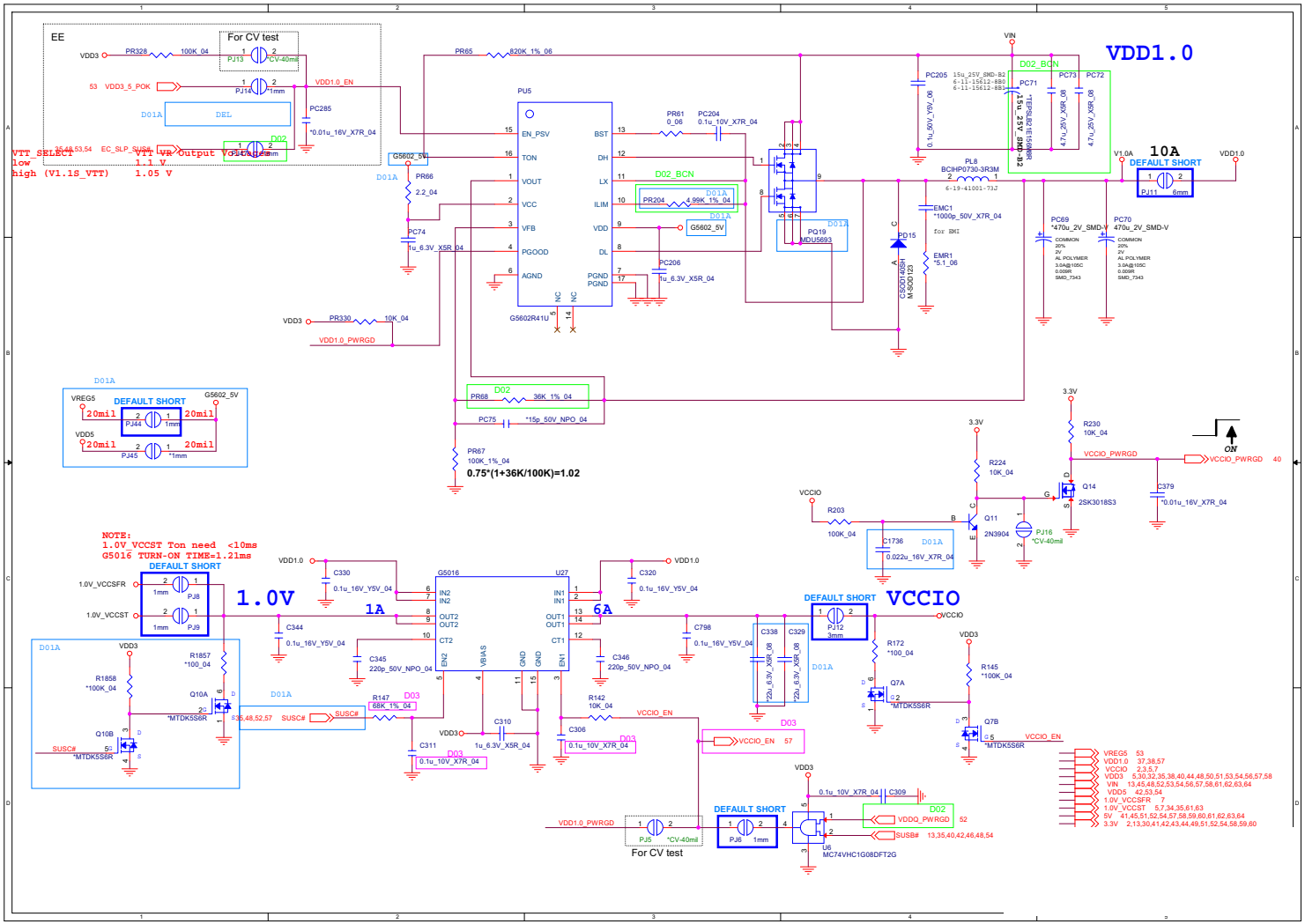

AC_In, Charger

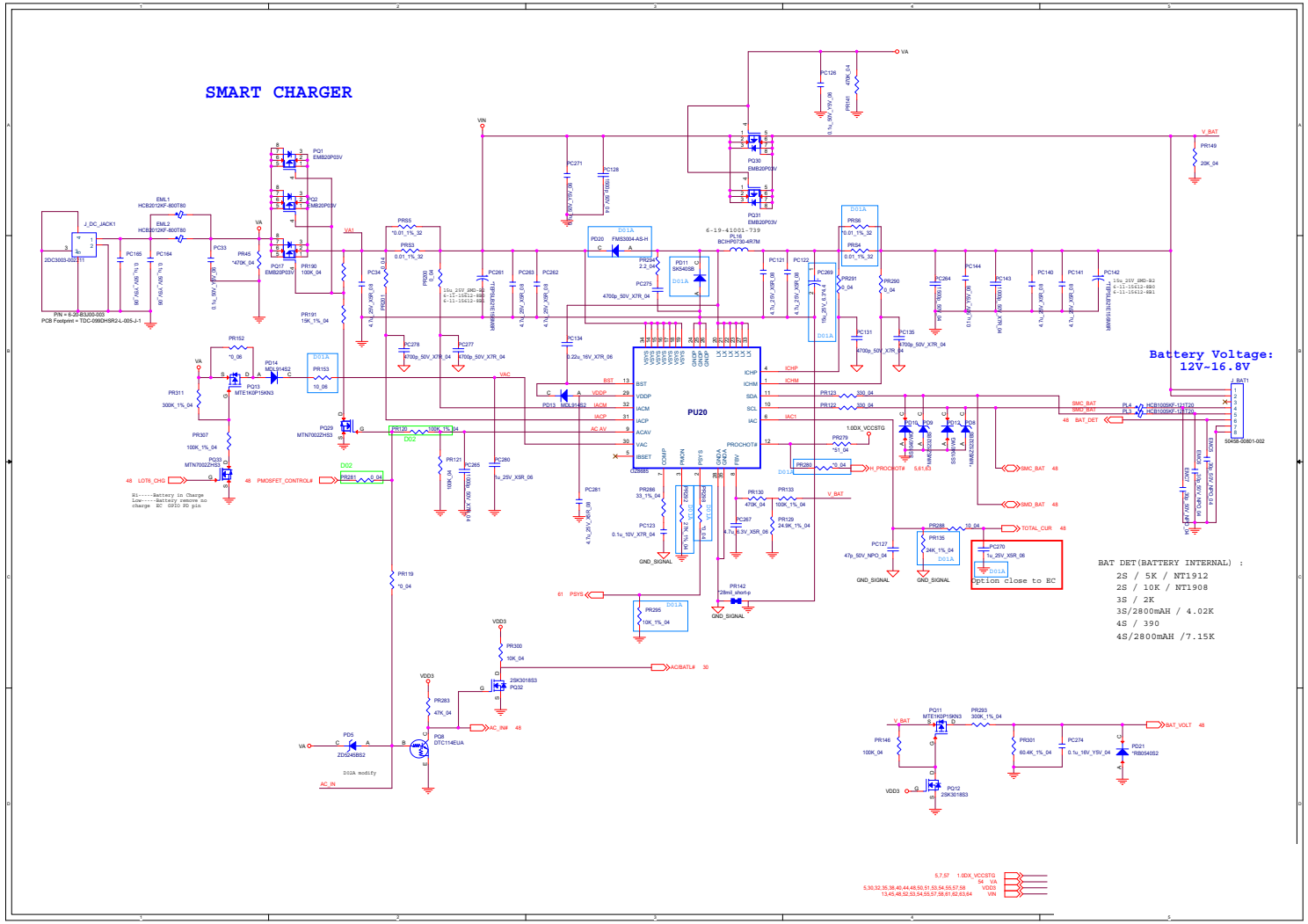

Sheet 56 of 79
AC_In, Charger

1.0DX_VCCSTG/VCCSFR_OC/2.5V

Sheet 57 of 79
1.0DX_VCCSTG/
VCCSFR_OC/2.5V

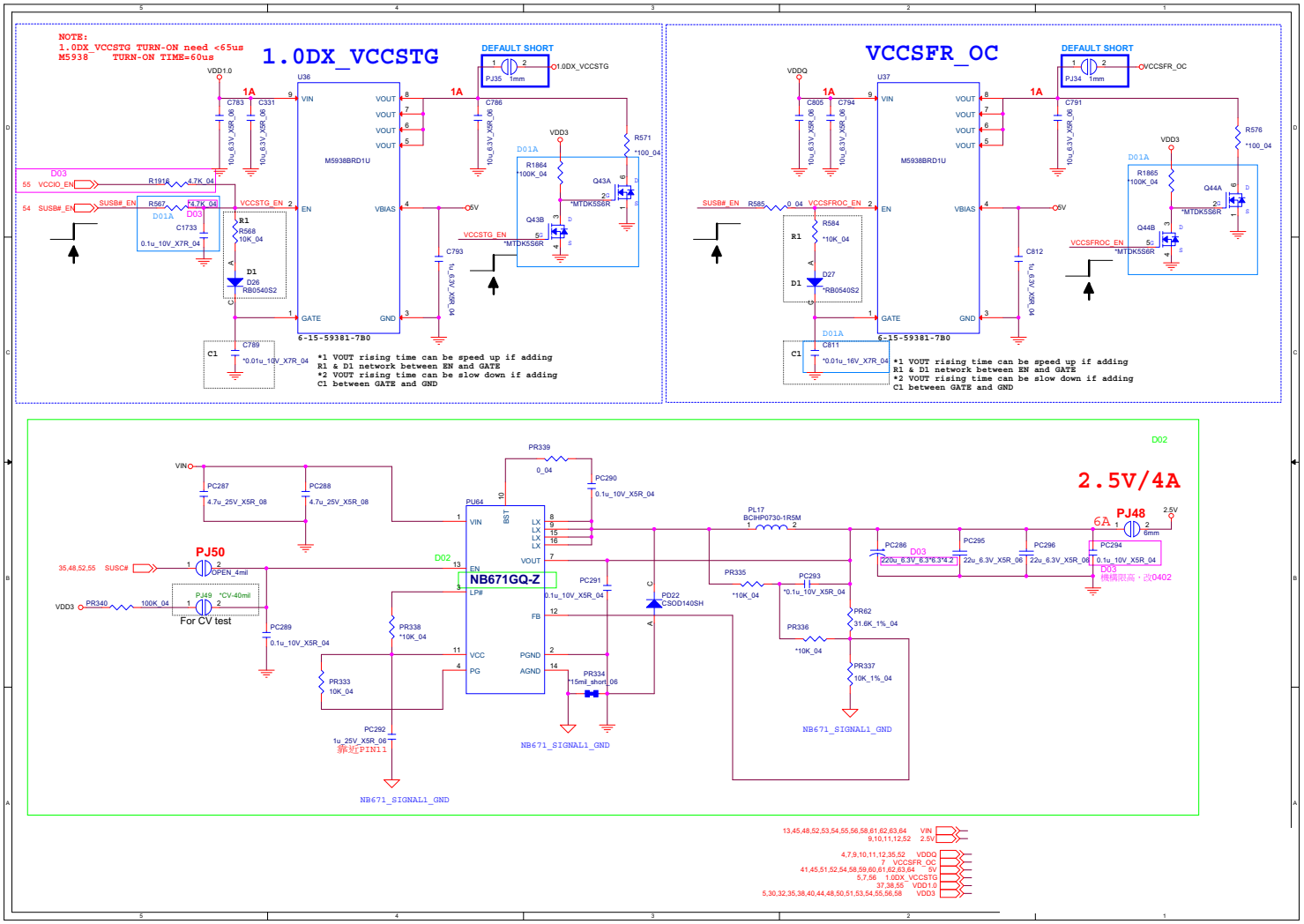

PEX_VDD, 3V3_AON, 3V3_RUN

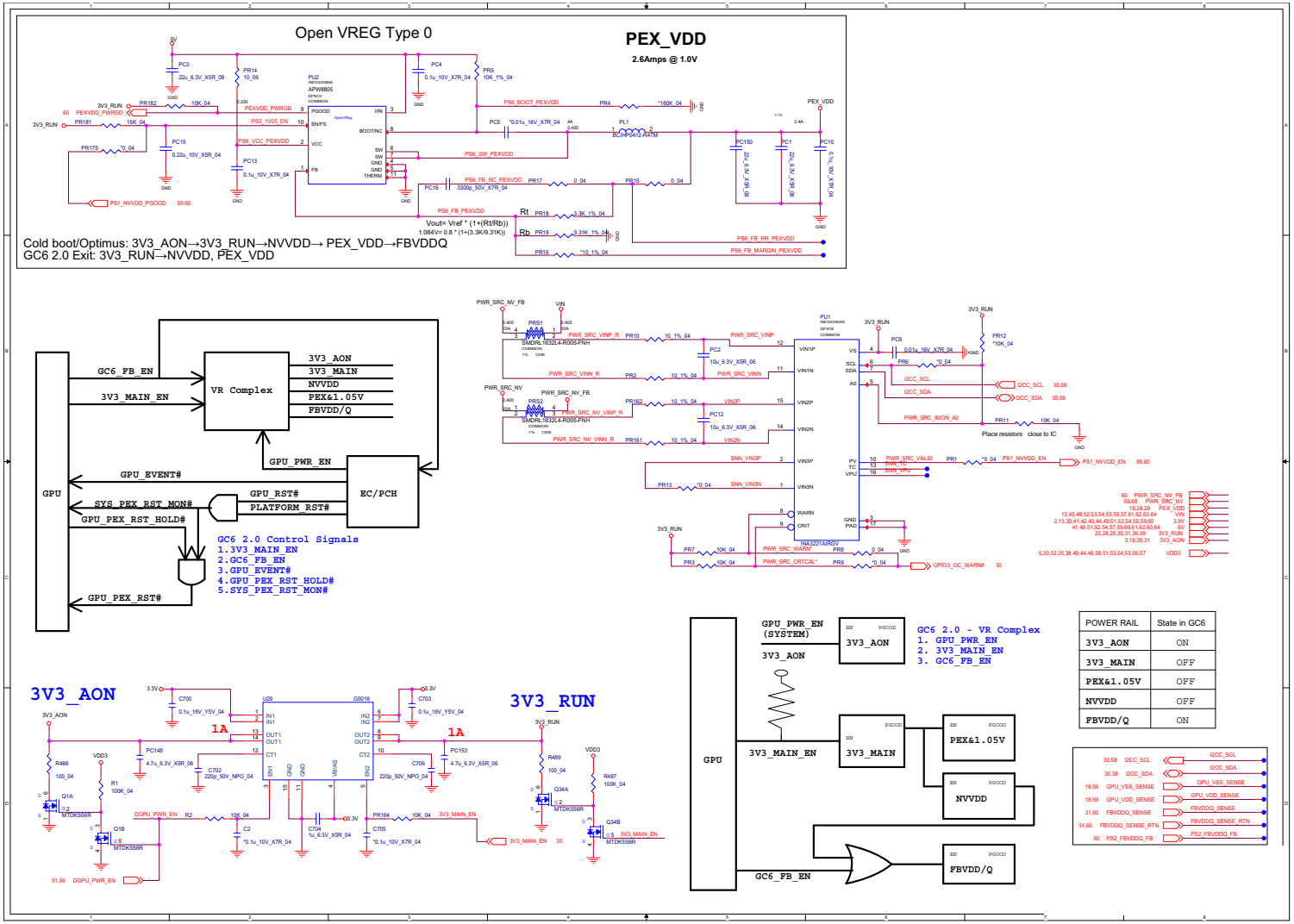

Sheet 58 of 79
PEX_VDD,
3V3,_AON,
3V3_RUN

NVVDD Phase 1 & 2

Sheet 59 of 79
NVVDD Phase 1 & 2

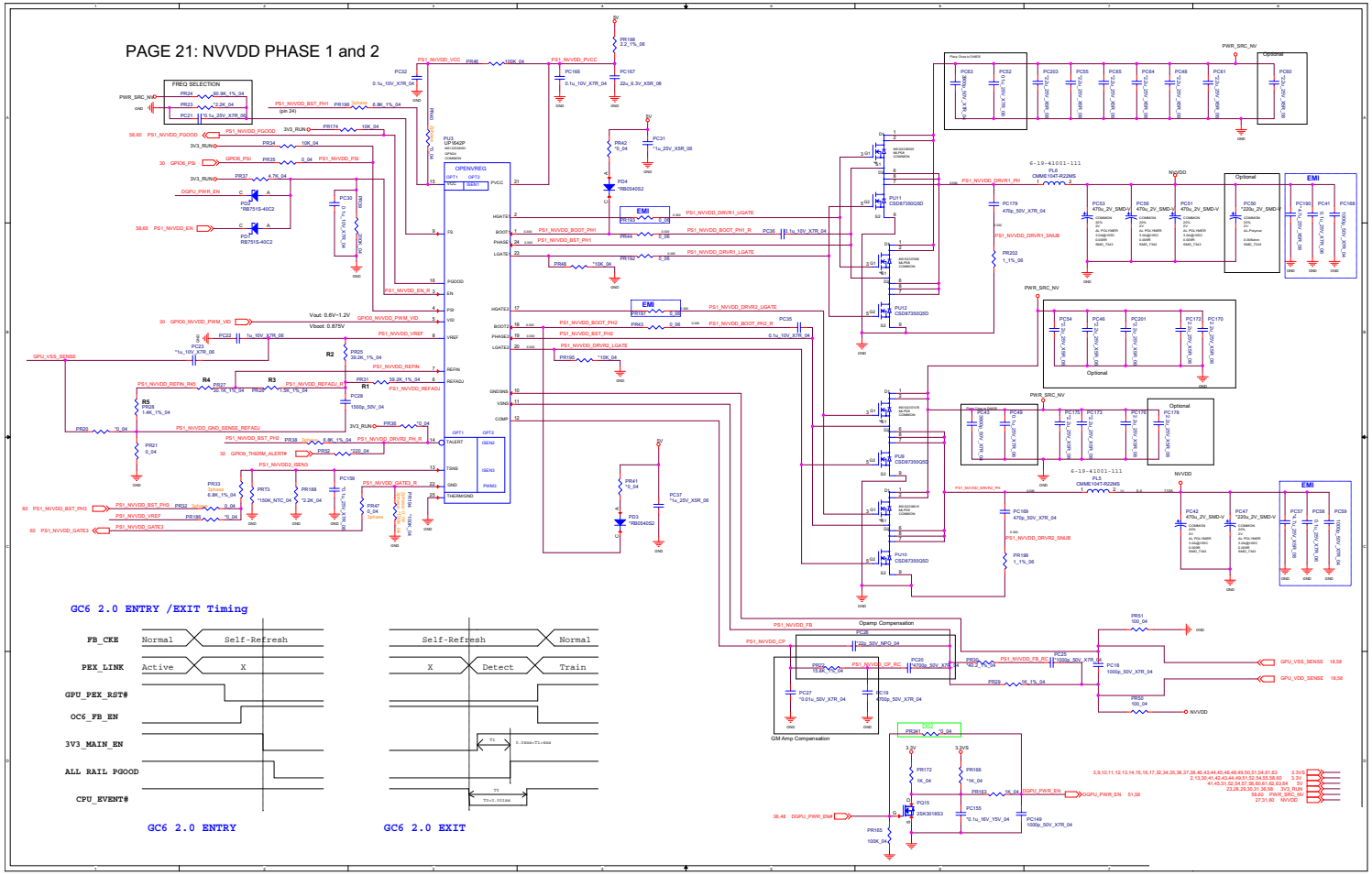

FBVDDQ

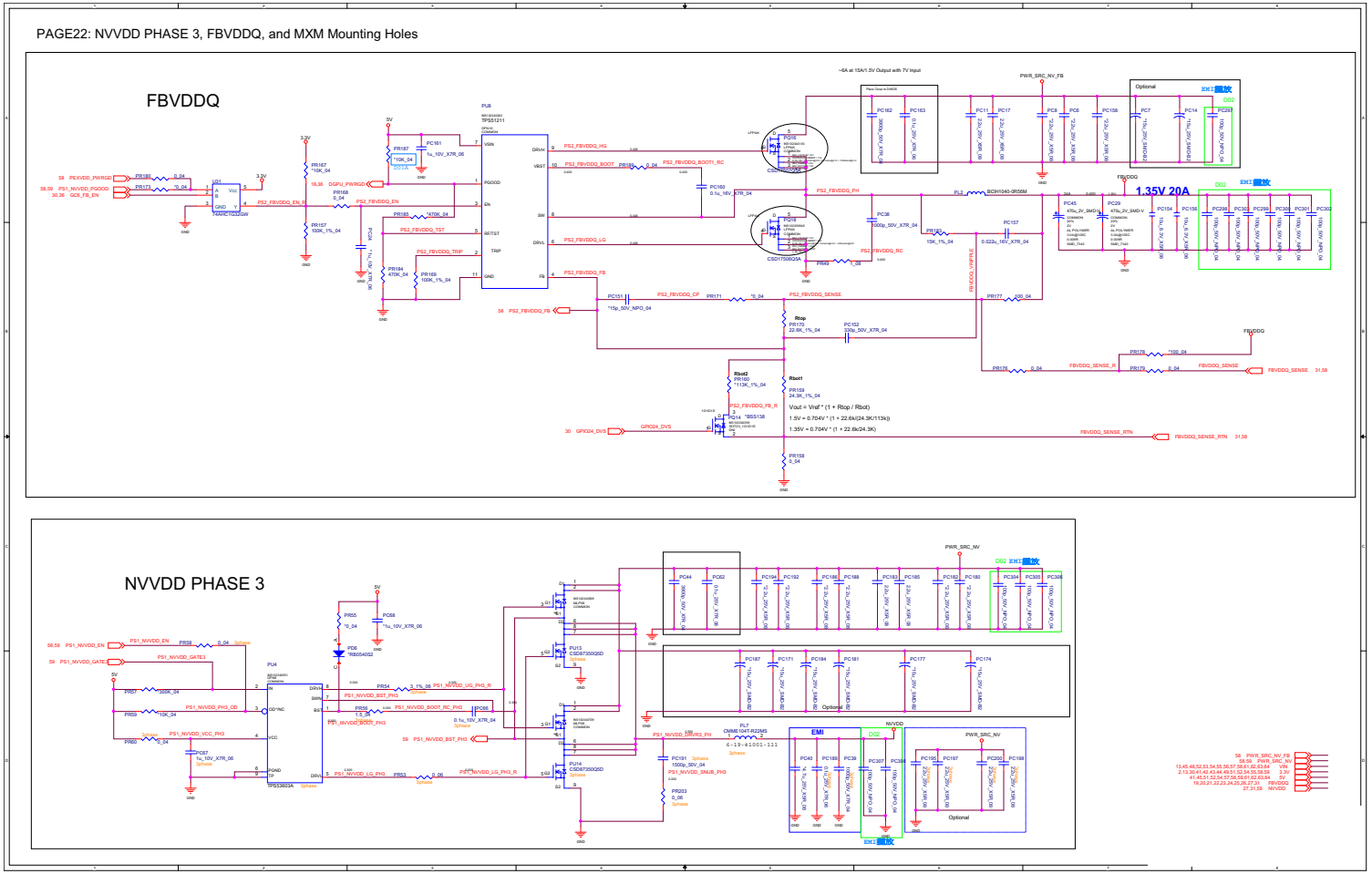

Sheet 60 of 79
FBVDD

VCC_Core & VCCSA

Sheet 61 of 79
VCC_Core & VCCSA

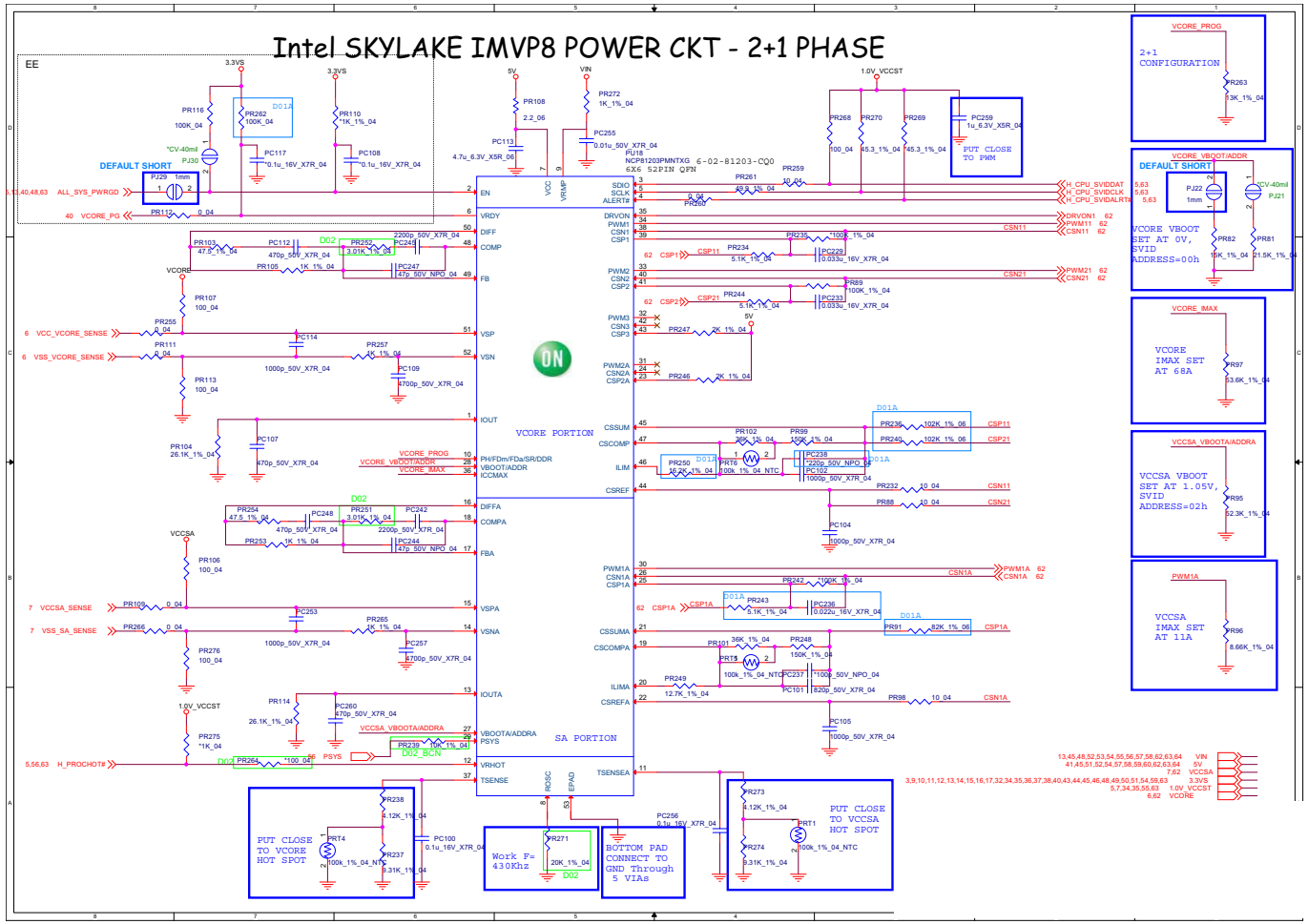

VCore & VCCSA Output Stage

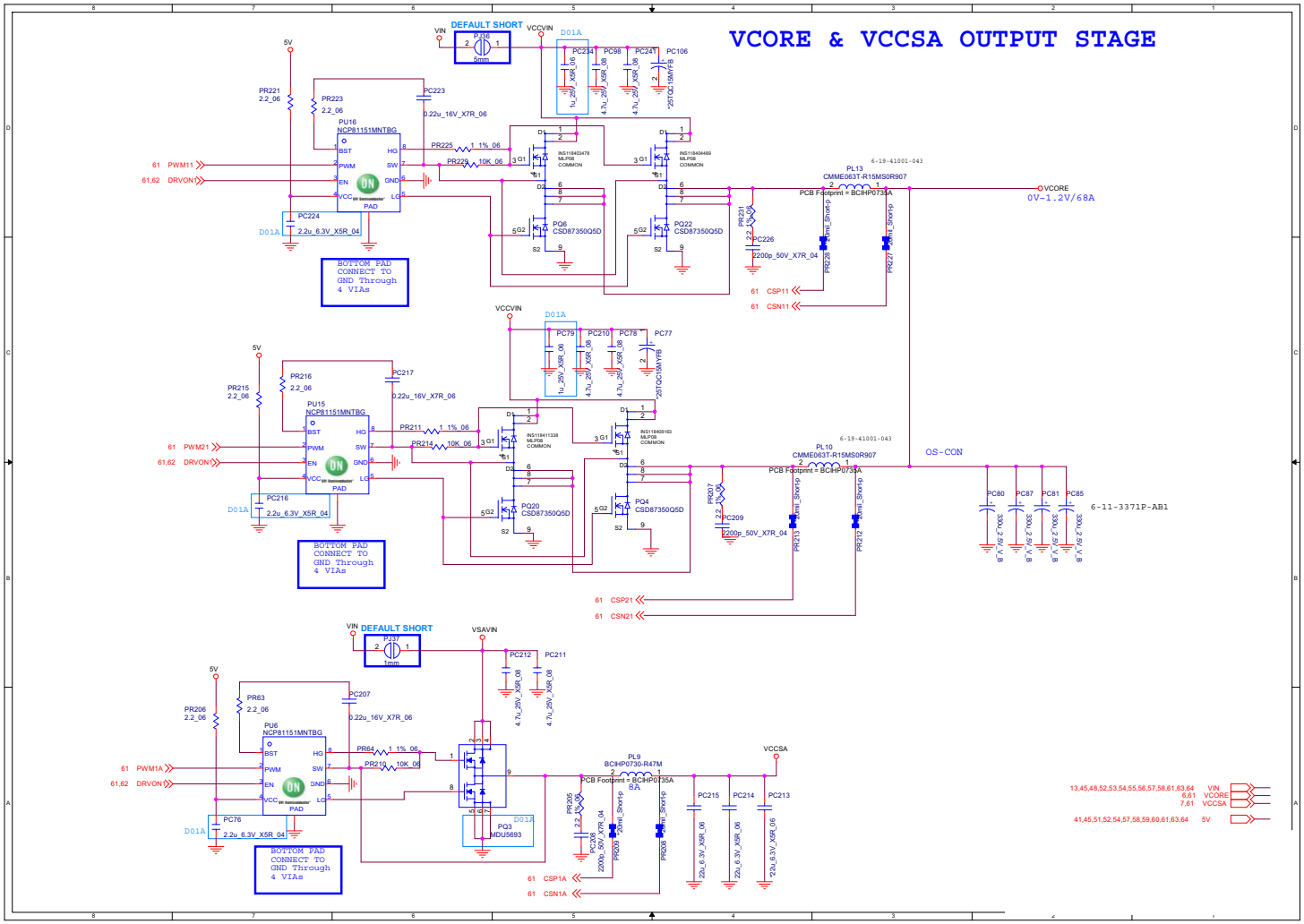

Sheet 62 of 79
VCore & VCCSA
Output Stage

VCCGT

Sheet 63 of 79
VCCGT

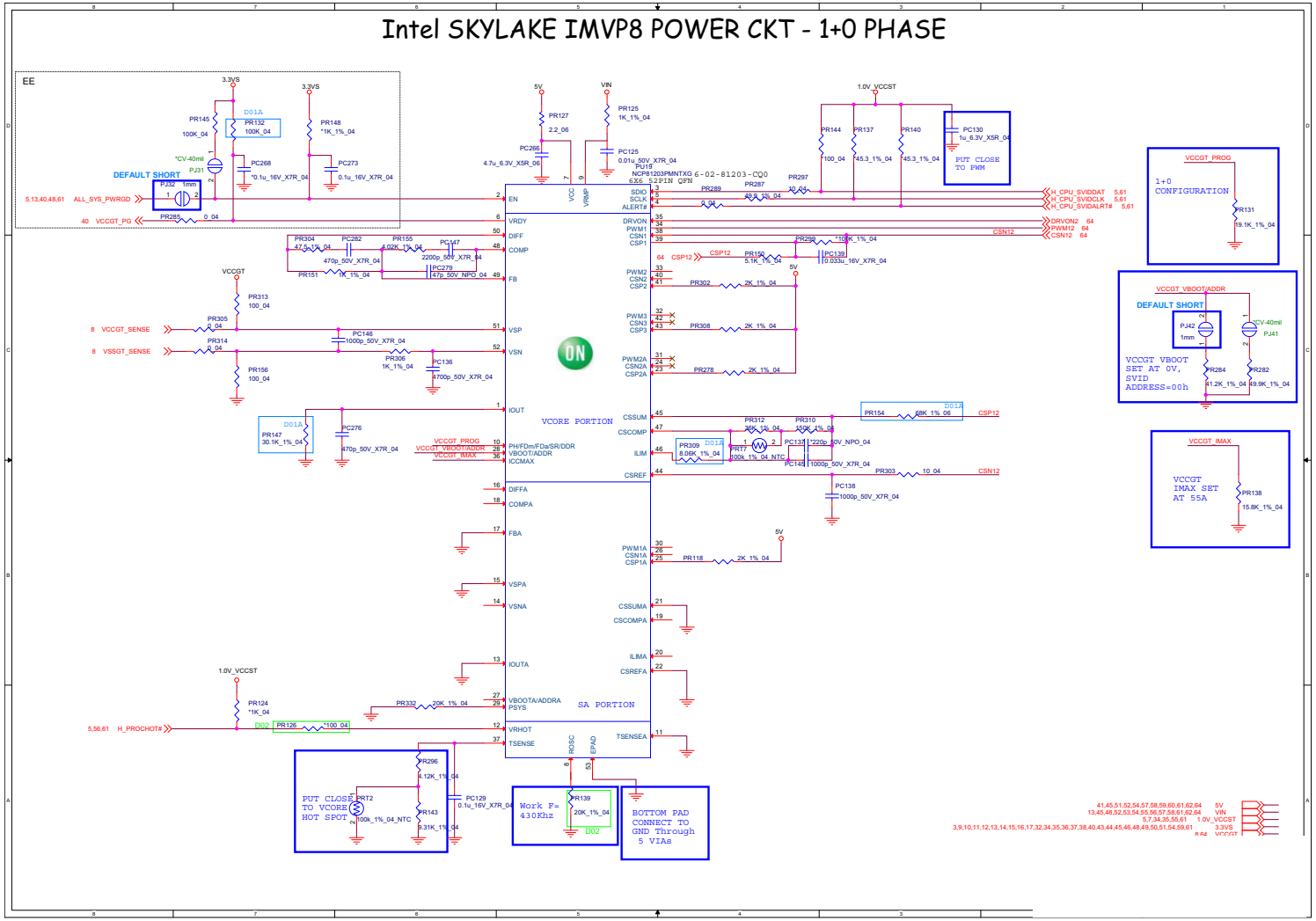

VCCGT Output Stage

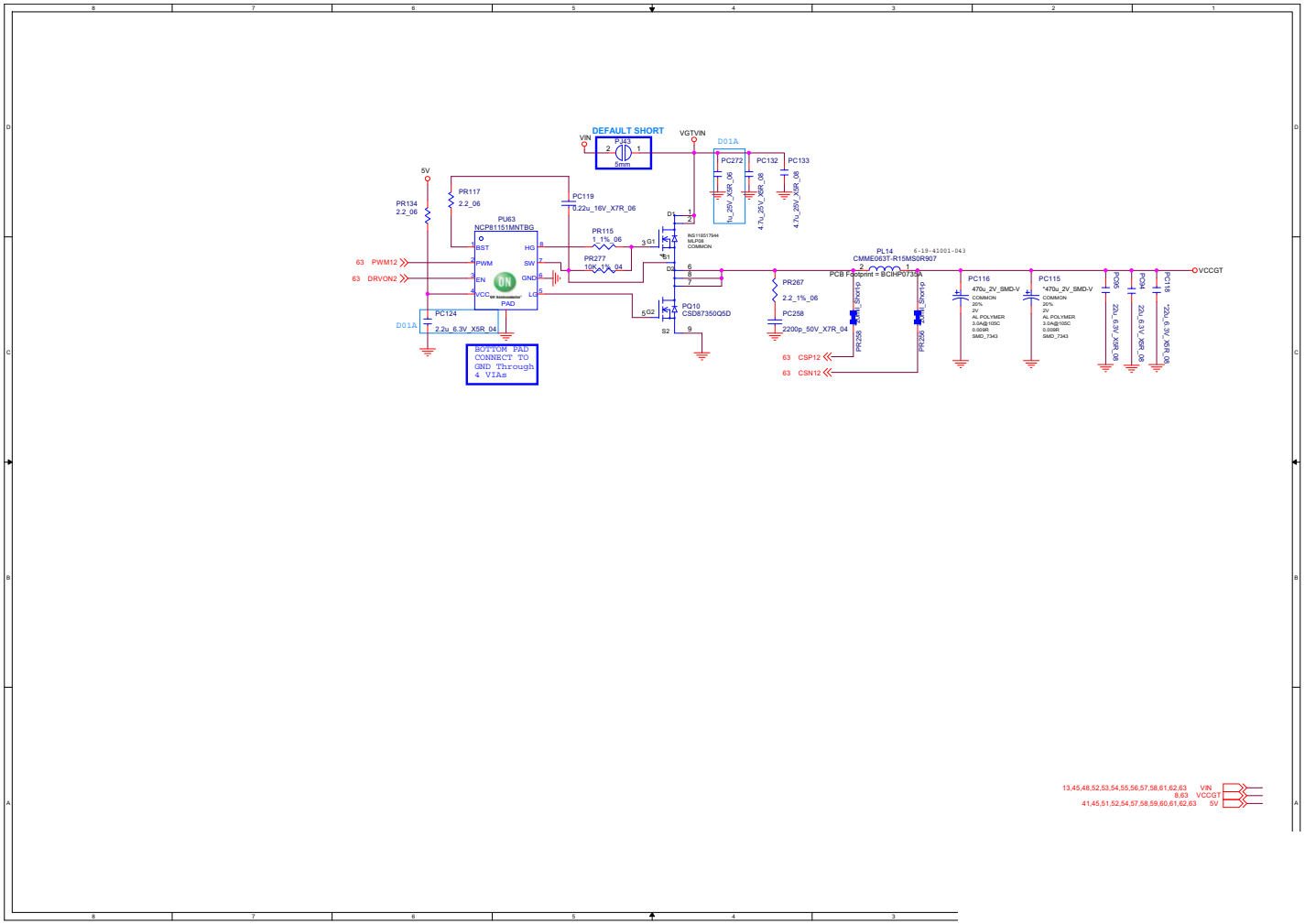

Sheet 64 of 79
VCCGT Output Stage

P650RE Audio Board A

Sheet 65 of 79
P650RE Audio Board A

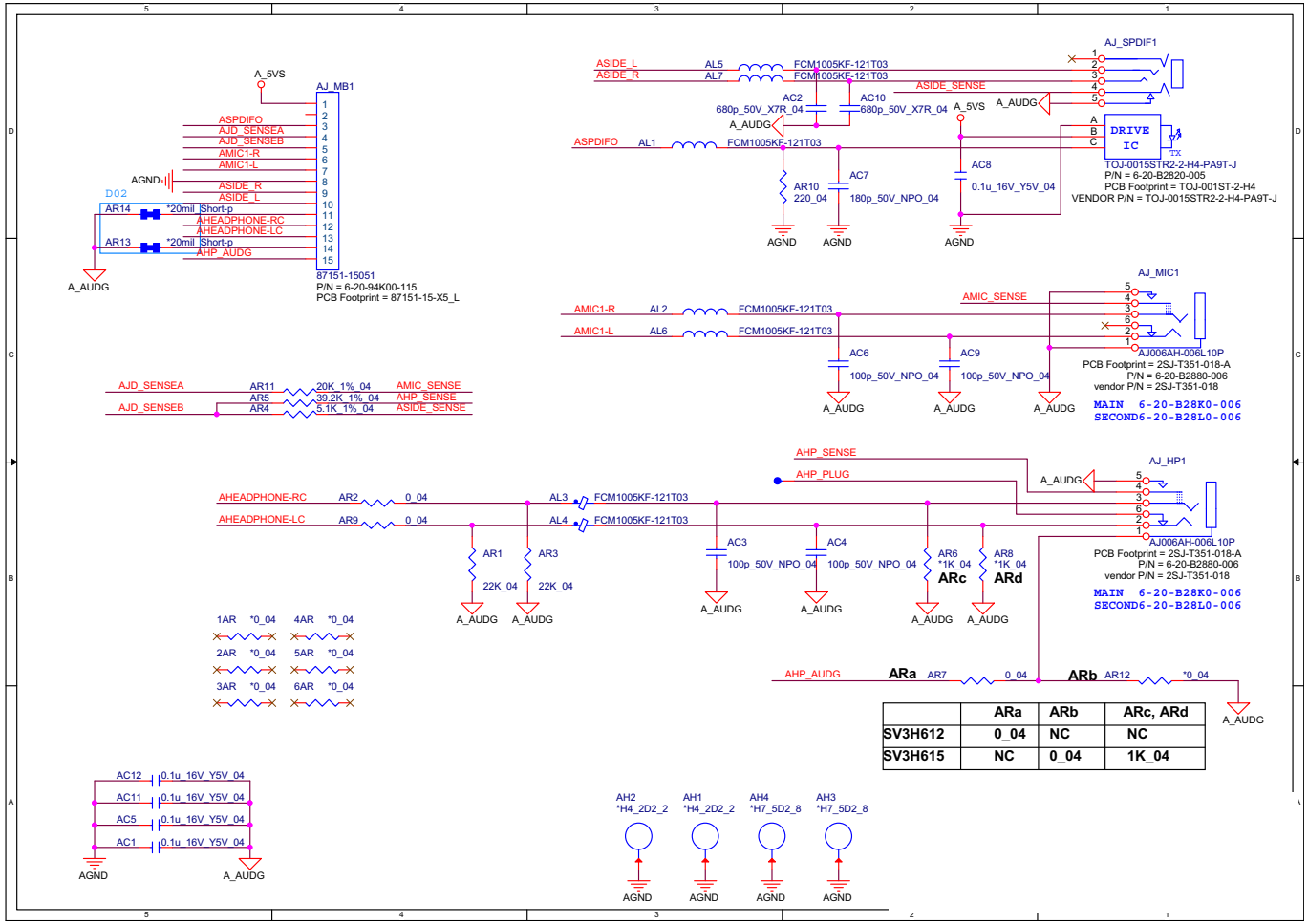

	ARa	ARb	ARc, ARd
SV3H612	0_04	NC	NC
SV3H615	NC	0_04	1K_04

P650RE Power Board

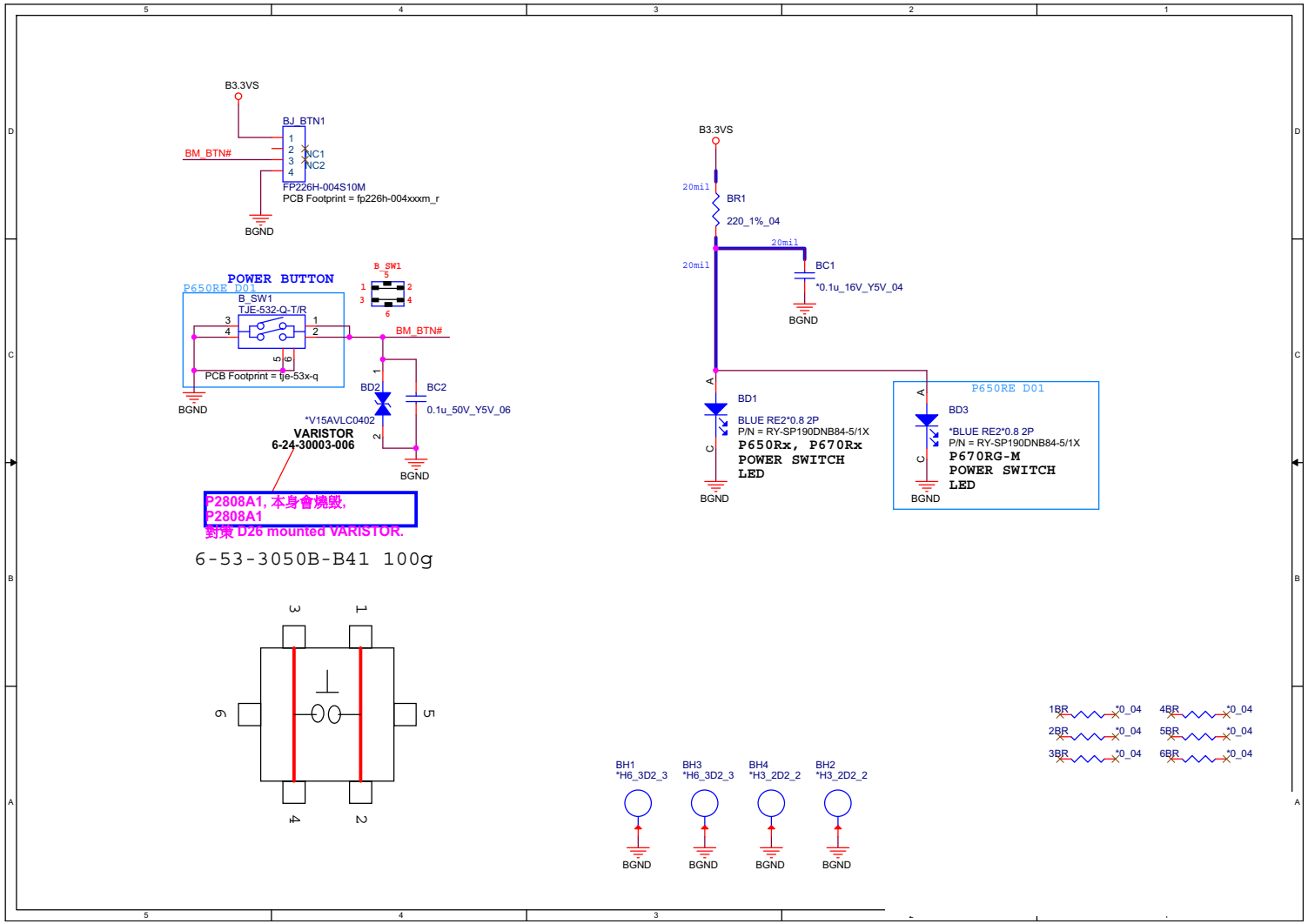

Sheet 66 of 79
P650RE Power Board

P650RE HDD Board

Sheet 67 of 79
P650RE HDD Board

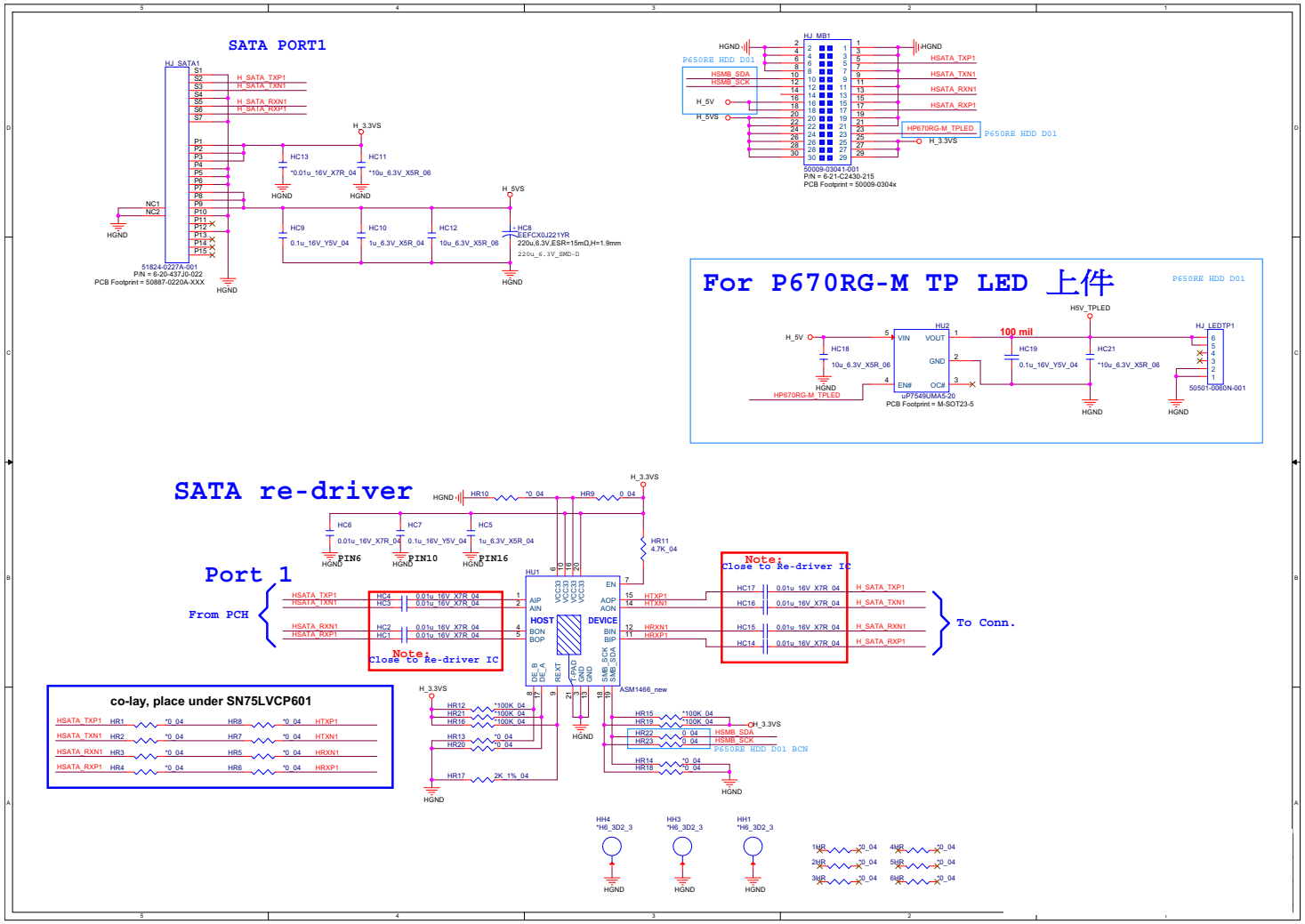

P650RE LED Board

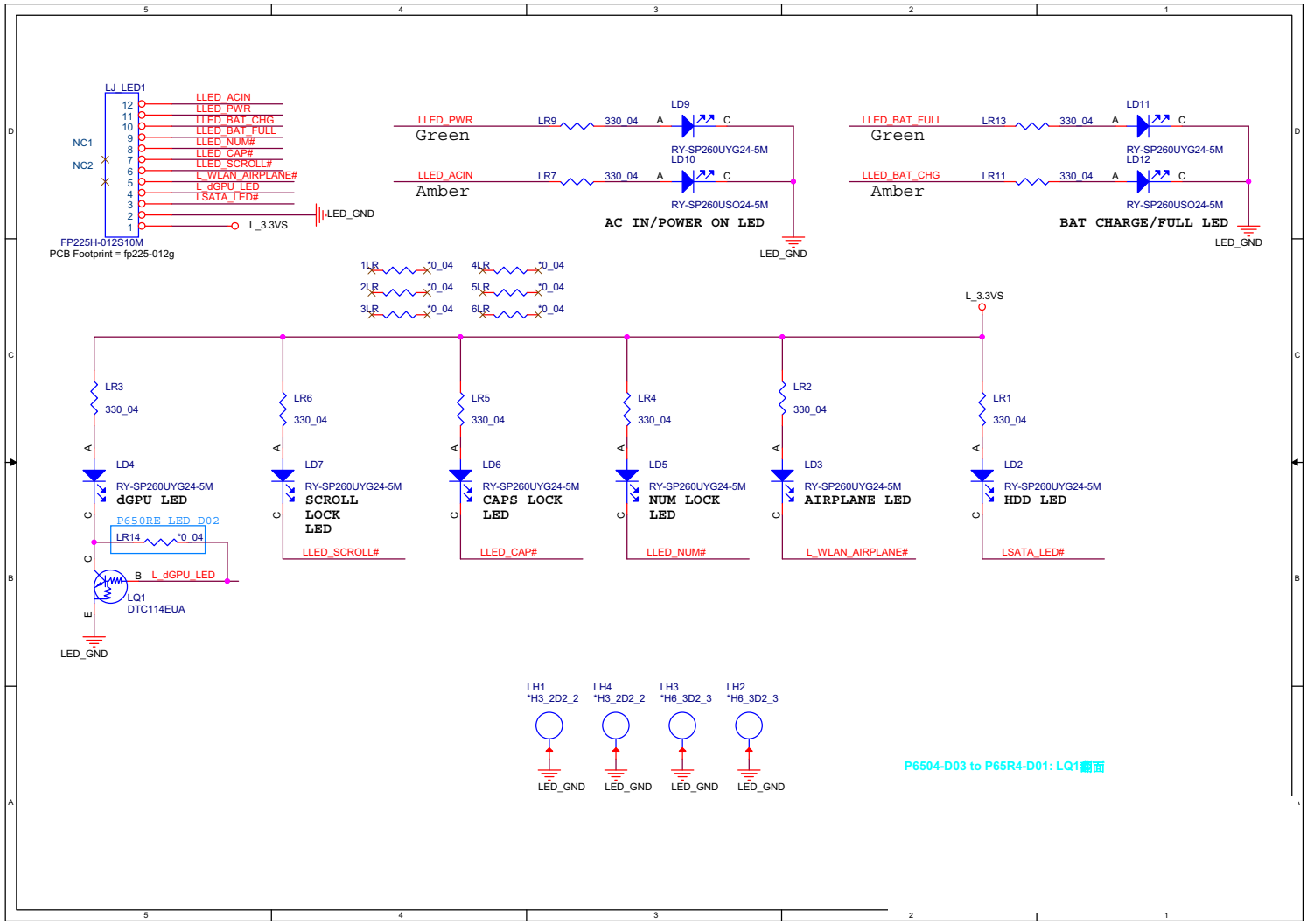

Sheet 68 of 79
P650RE LED Board

Finger Sensor Board

Sheet 69 of 79
Finger Sensor Board

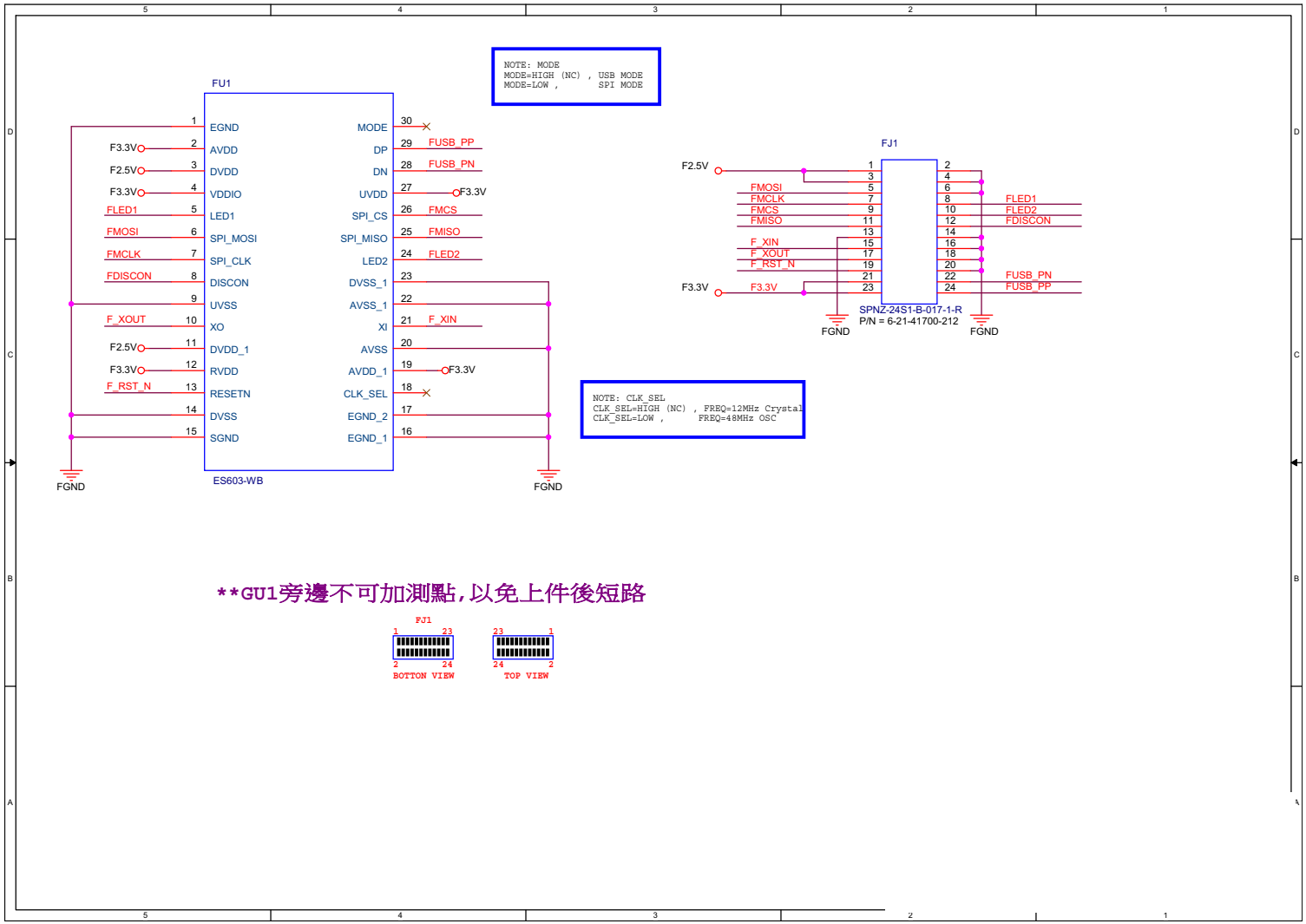

P650RE Click Board

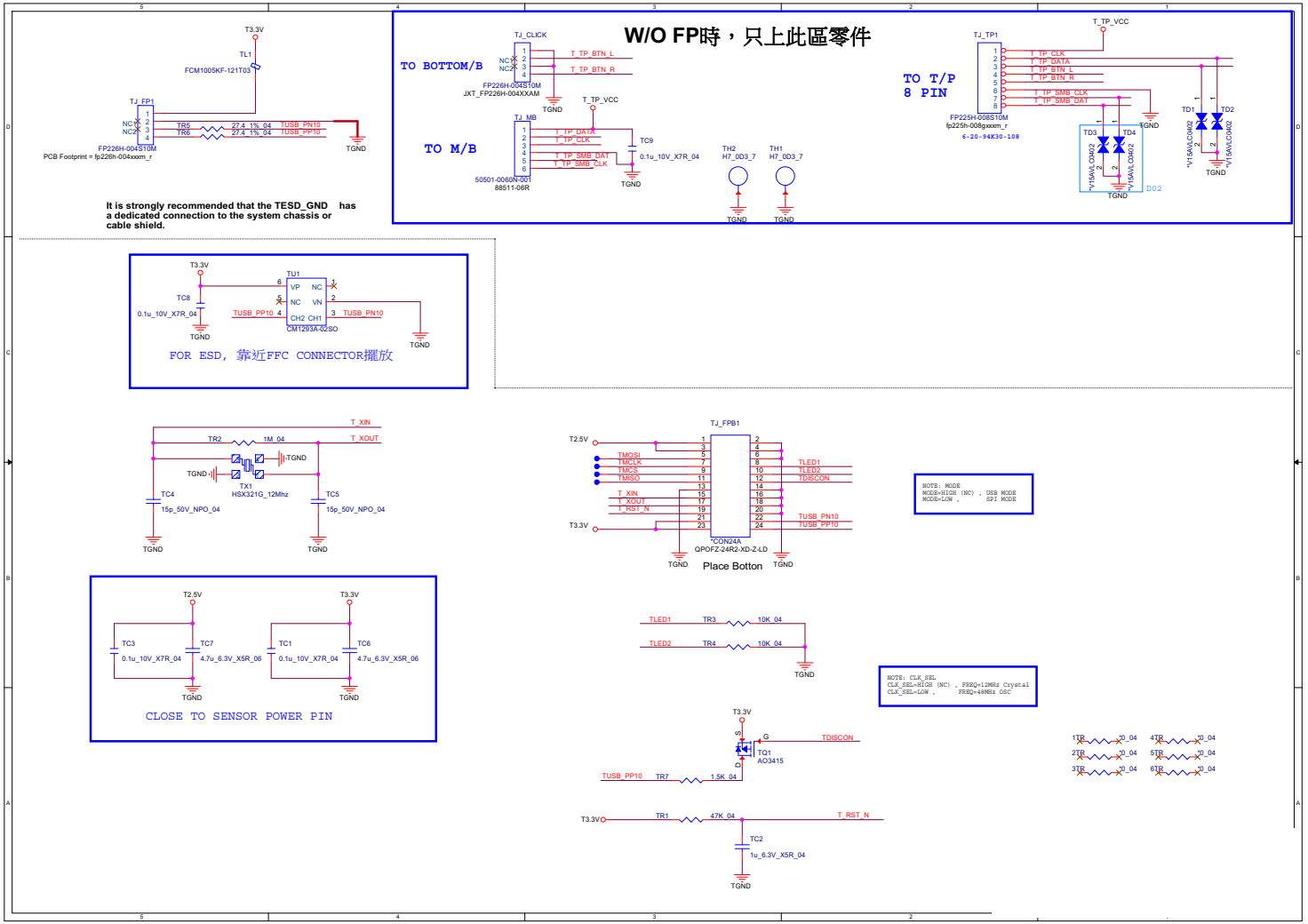

Sheet 70 of 79
P650RE Click Board

P650RE USB Board 1/3

Sheet 71 of 79
P650RE USB Board 1/3

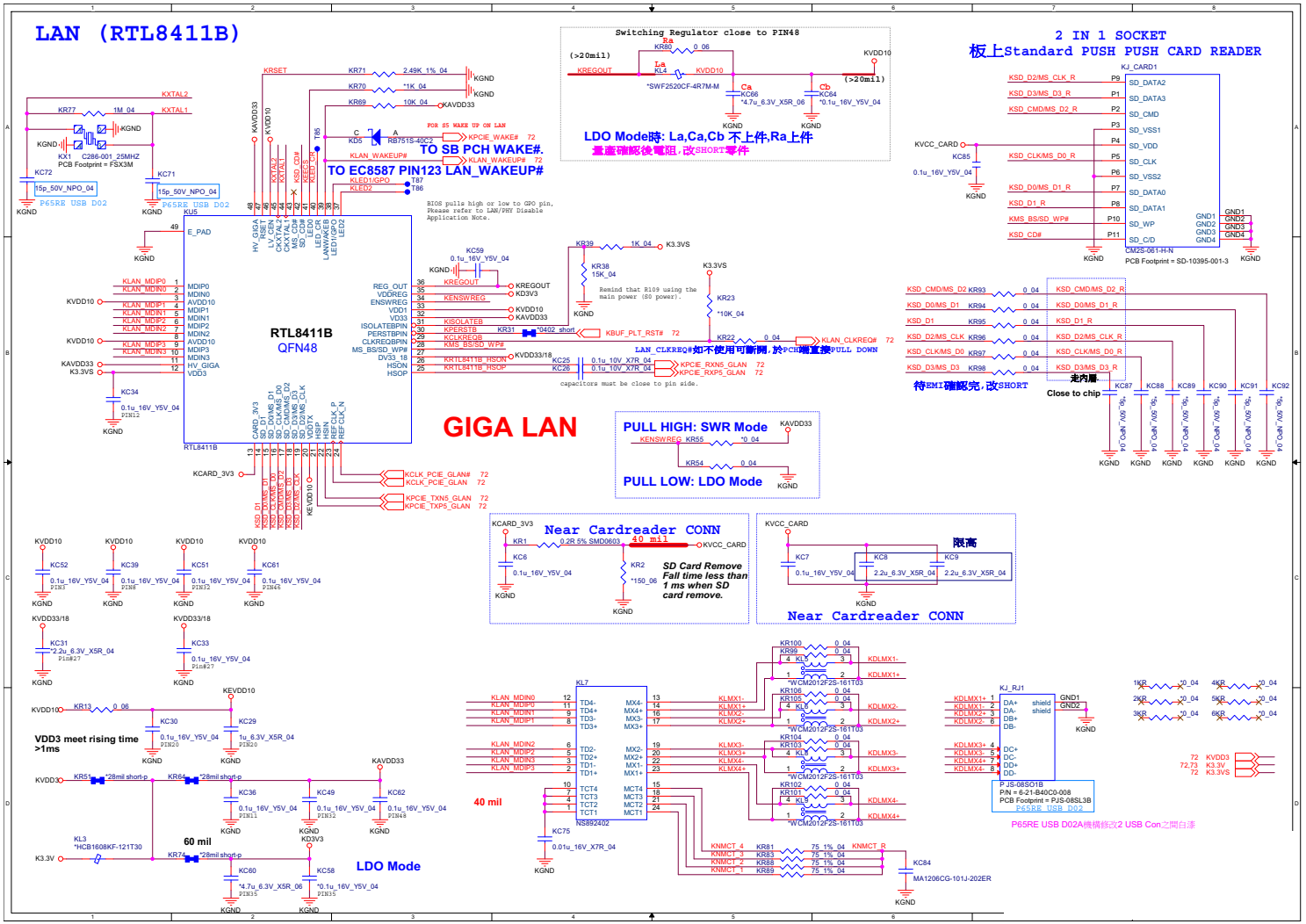

P650RE USB Board 2/3

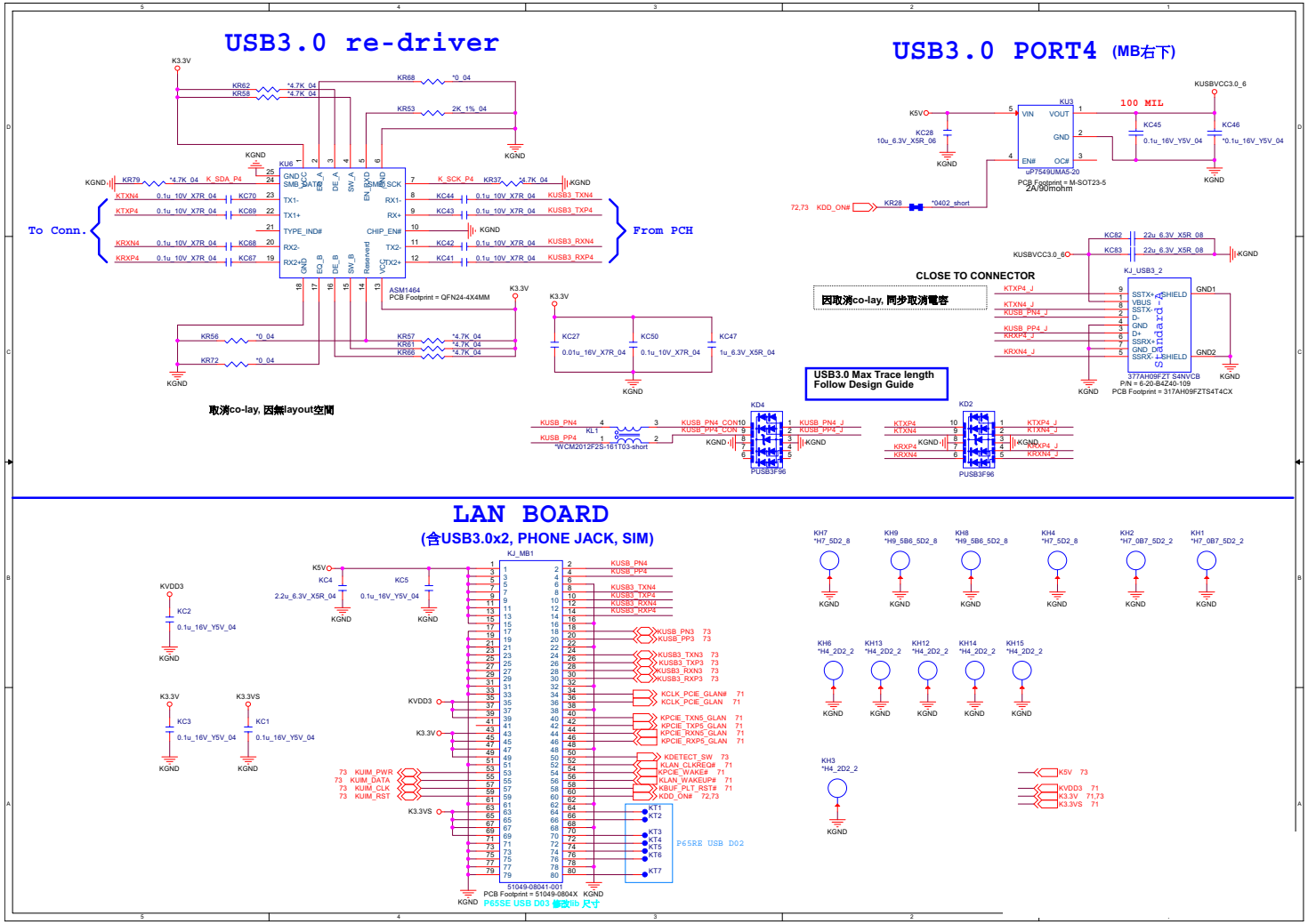

P650RE USB Board 3/3

Sheet 73 of 79
P650RE USB Board 3/3

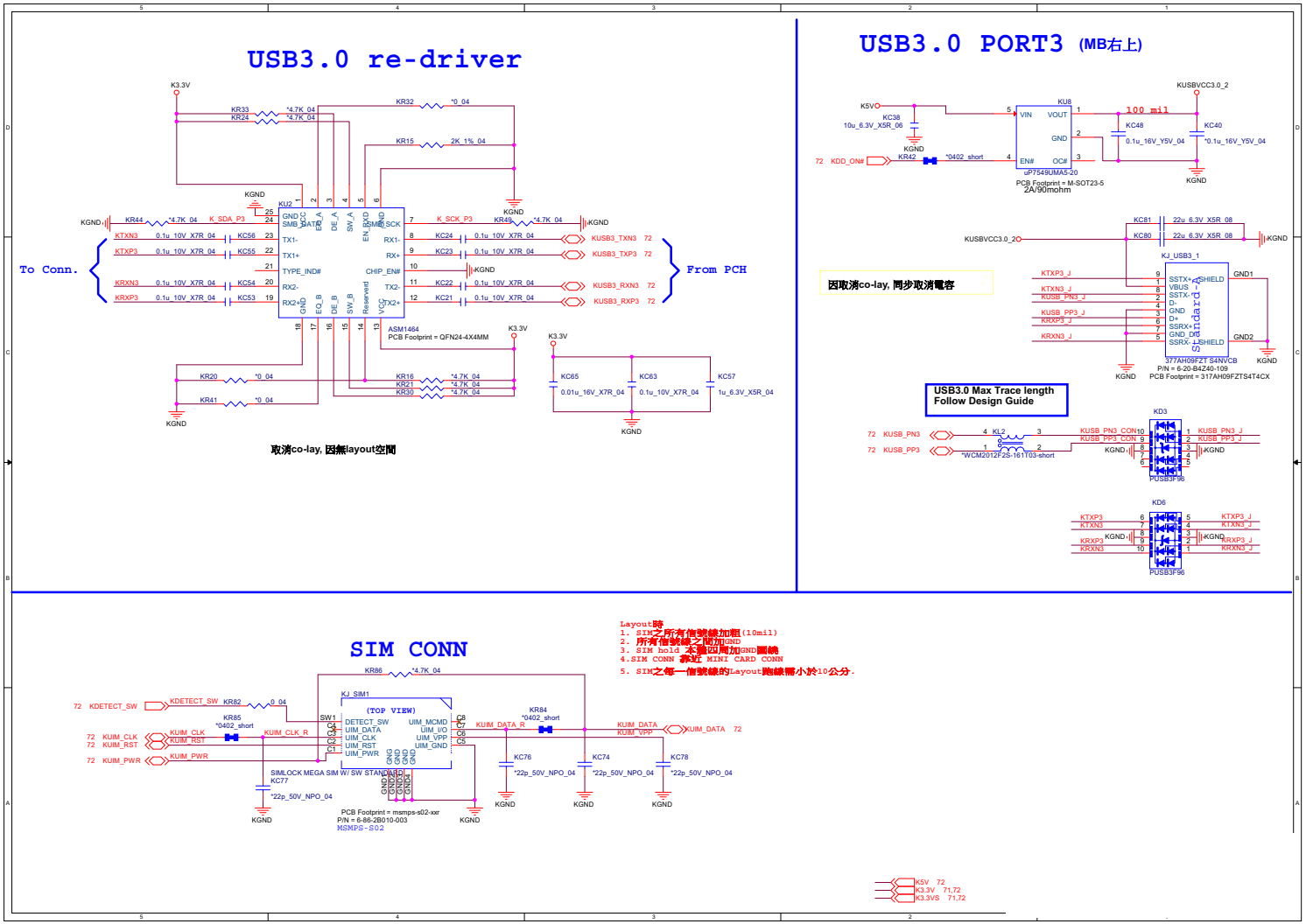

P670RE USB Board 1/3

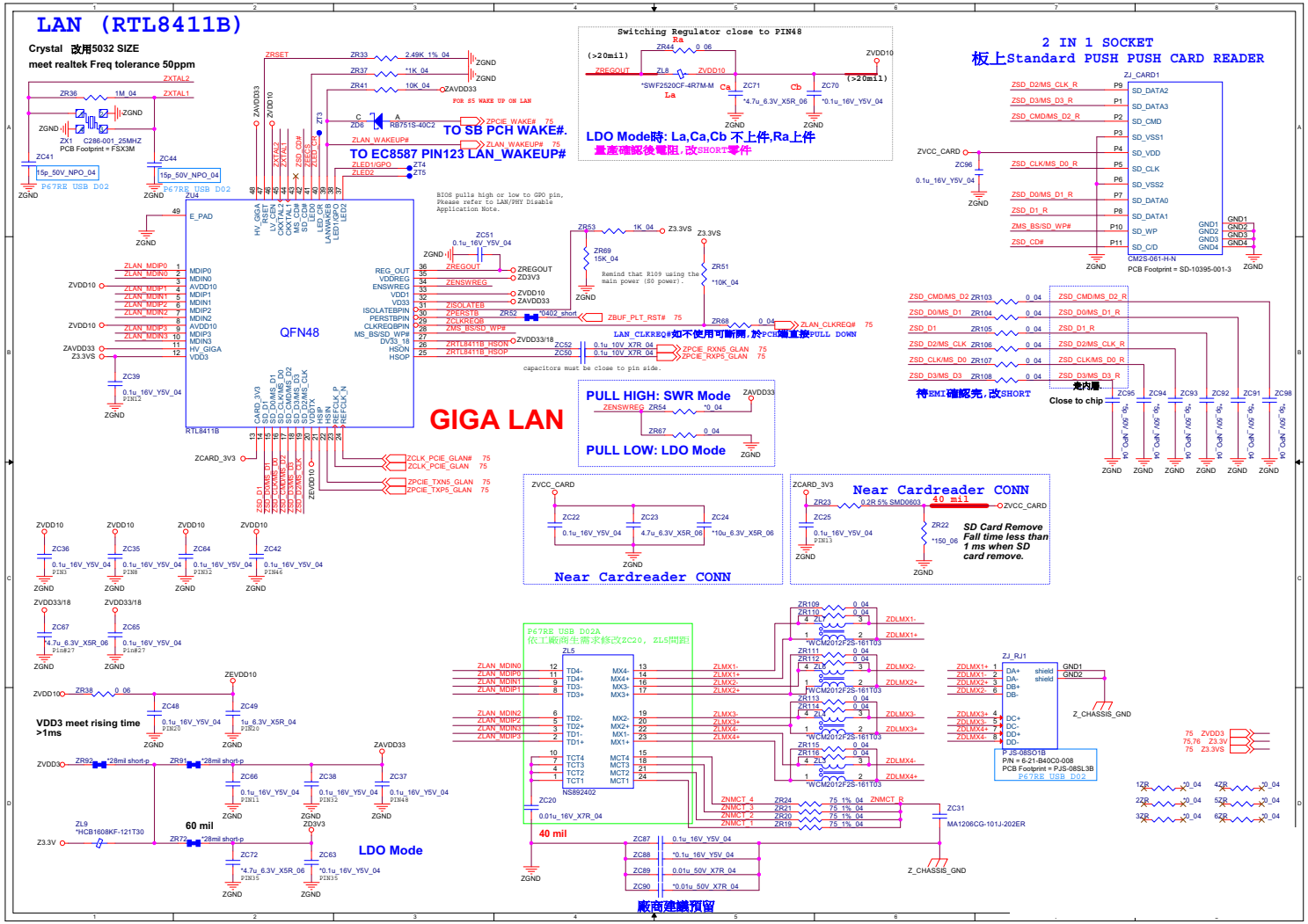

P670RE USB Board 2/3

Sheet 75 of 79
P670RE USB Board 2/3

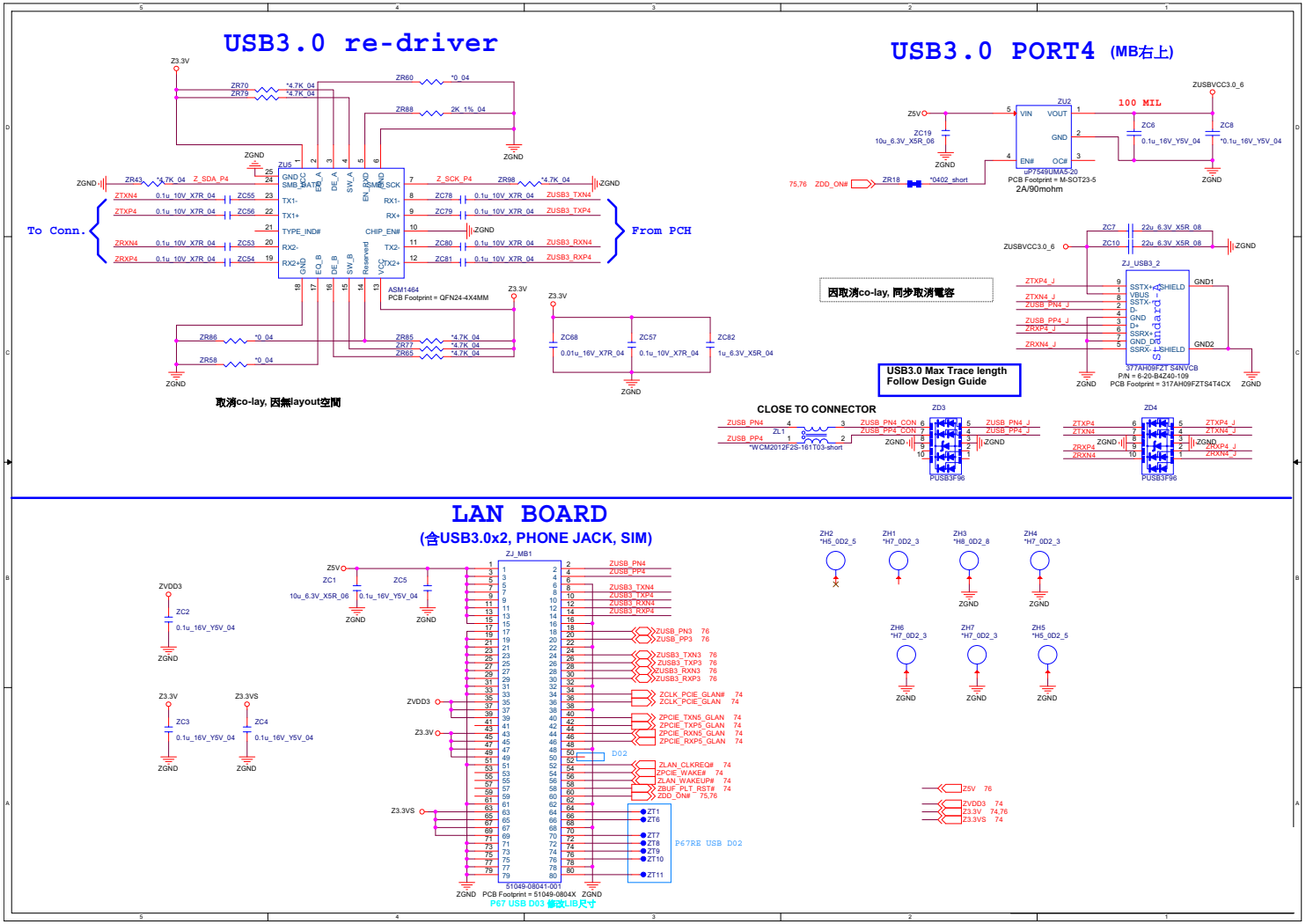

P670RE USB Board 3/3

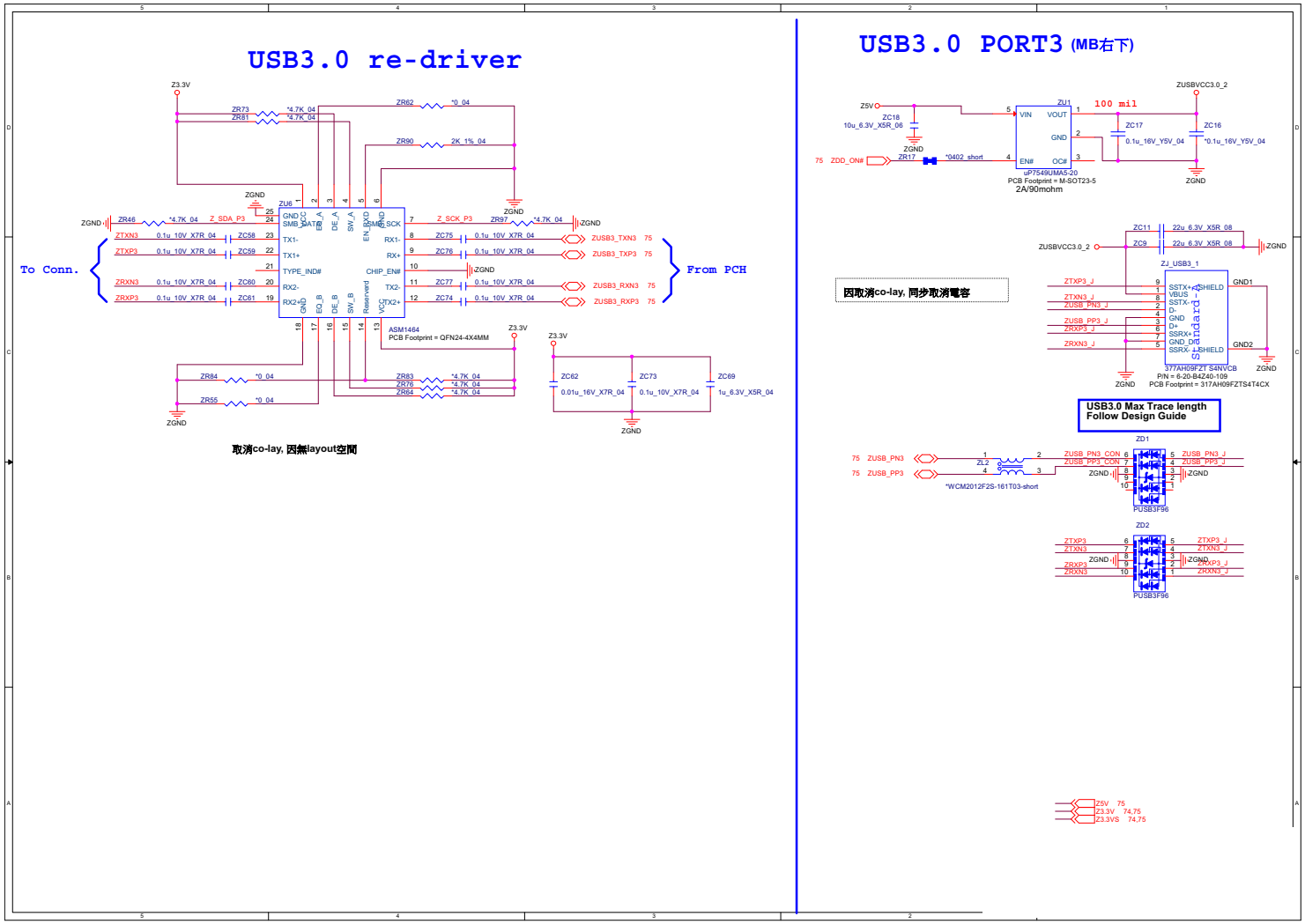

P670RE LED Board

Sheet 77 of 79
P670RE LED Board

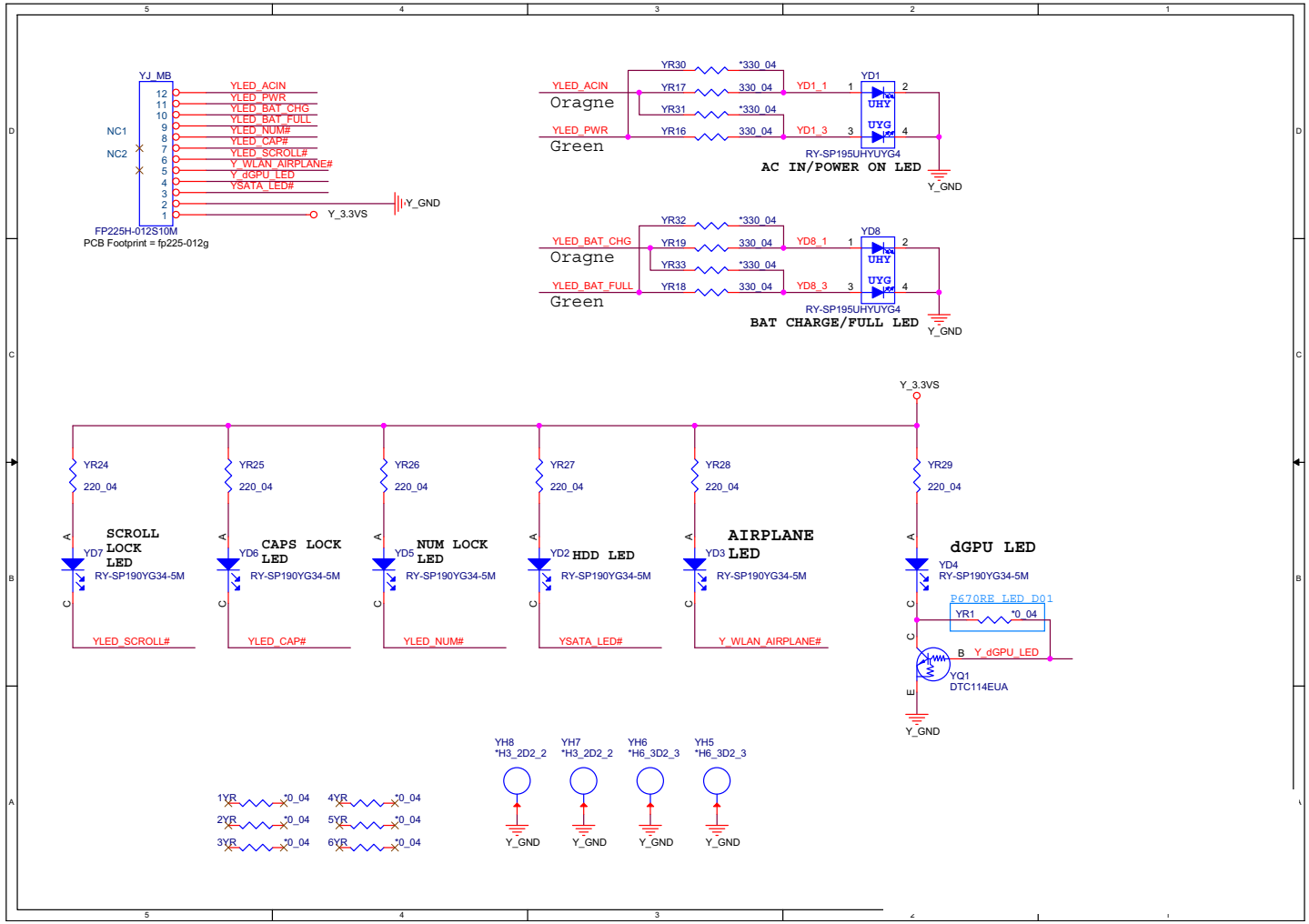

P655RE Power Board

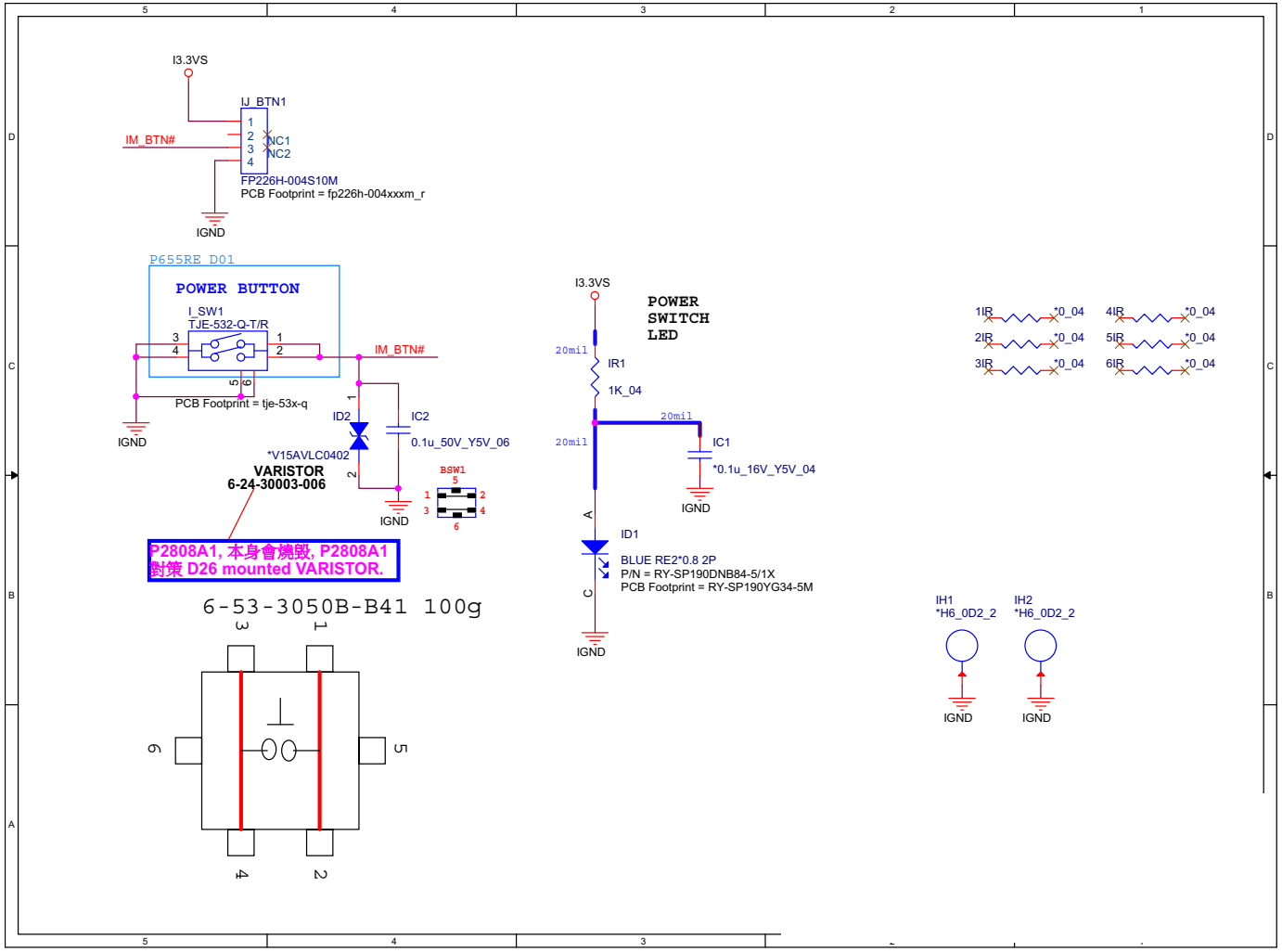

Sheet 78 of 79
P655RE Power Board

P655RE LED Board

Sheet 79 of 79
P655RE LED Board

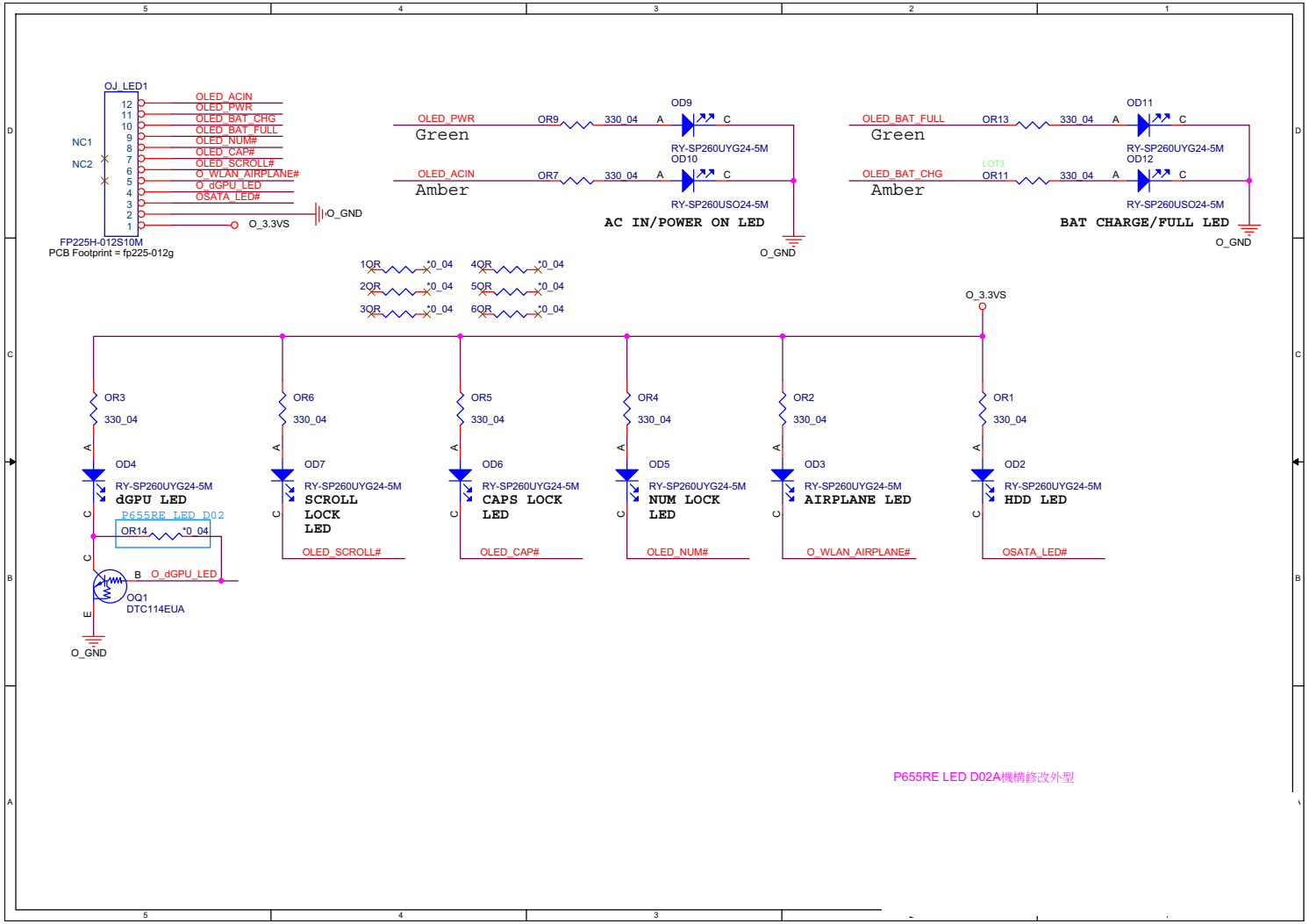

Appendix C: Updating the FLASH ROM BIOS

To update the FLASH ROM BIOS, you must:

- Download the BIOS update from the web site.
- Unzip the files onto a bootable CD/DVD/USB Flash Drive.
- Reboot your computer from an external CD/DVD/USB Flash Drive.
- Use the flash tools to update the flash BIOS using the commands indicated below.
- Restart the computer booting from the HDD and press **F2** at startup enter the BIOS.
- Load setup defaults from the BIOS and save the default settings and exit the BIOS to restart the computer.
- After rebooting the computer you may restart the computer again and make any required changes to the default BIOS settings.

Download the BIOS

1. Go to **www.clevo.com.tw** and point to **E-Services** and click **E-Channel**.
2. Use your user ID and password to access the appropriate download area (BIOS), and download the latest BIOS files (the BIOS file will be contained in a batch file that may be run directly once unzipped) for your computer model (**see sidebar for important information on BIOS versions**).

Unzip the downloaded files to a bootable CD/DVD/ or USB Flash drive

1. Insert a bootable CD/DVD/USB flash drive into the CD/DVD drive/USB port of the computer containing the downloaded files.
2. Use a tool such as Winzip or Winrar to unzip all the BIOS files and refresh tools to your bootable CD/DVD/USB flash drive (you may need to create a bootable CD/DVD with the files using a 3rd party software).

Set the computer to boot from the external drive

1. With the bootable CD/DVD/USB flash drive containing the BIOS files in your CD/DVD drive/USB port, restart the computer and press **F2** (in most cases) to enter the BIOS.
2. Use the arrow keys to highlight the **Boot** menu.
3. Use the "+" and "-" keys to move boot devices up and down the priority order.
4. Make sure that the CD/DVD drive/USB flash drive is set first in the boot priority of the BIOS.
5. Press **F4** to save any changes you have made and exit the BIOS to restart the computer.

BIOS Version

Make sure you download the latest correct version of the BIOS appropriate for the computer model you are working on.

You should only download BIOS versions that are V1.01.XX or higher as appropriate for your computer model.

Note that BIOS versions are not backward compatible and therefore **you may not downgrade your BIOS to an older version** after upgrading to a later version (e.g if you upgrade a BIOS to ver 1.01.05, you **MAY NOT** then go back and flash the BIOS to ver 1.01.04).

Use the flash tools to update the BIOS

1. Make sure you are not loading any memory management programs such as HIMEM by holding the **F8** key as you see the message "**EFI Shell**". You will then be prompted to give "**Y**" or "**N**" responses to the programs being loaded by EFI Shell. Choose "N" for any memory management programs.
2. You should now see DISK **fsX**:\> (X is the designated drive number for the CD/DVD drive/USB flash drive).
3. **Type the following command**:

   fsX:\> Flash.nsh

4. The utility will then proceed to flash the BIOS.
5. You should then be prompted to press any key to restart the system or turn the power off, and then on again but make sure you remove the CD/DVD/USB flash drive from the CD/DVD drive/USB port before the computer restarts.

Restart the computer (booting from the HDD)

1. With the CD/DVD/USB flash drive removed from the CD/DVD drive/USB port the computer should restart from the HDD.
2. Press **F2** as the computer restarts to enter the BIOS.
3. Use the arrow keys to highlight the **Exit** menu.
4. Select **Load Setup Defaults** (or press **F3**) and select "**Yes**" to confirm the selection.
5. Press **F4** to save any changes you have made and exit the BIOS to restart the computer.

Your computer is now running normally with the updated BIOS

You may now enter the BIOS and make any changes you require to the default settings.