SERVICE MANUAL

notebook

NL40MU1 / NL41MU1 / NL40MU2 / NL41MU2

Notebook Computer

NL40MU1 / NL41MU1 / NL40MU2 / NL41MU2

Service Manual

Notice

The company reserves the right to revise this publication or to change its contents without notice. Information contained herein is for reference only and does not constitute a commitment on the part of the manufacturer or any subsequent vendor. They assume no responsibility or liability for any errors or inaccuracies that may appear in this publication nor are they in anyway responsible for any loss or damage resulting from the use (or misuse) of this publication.

This publication and any accompanying software may not, in whole or in part, be reproduced, translated, transmitted or reduced to any machine readable form without prior consent from the vendor, manufacturer or creators of this publication, except for copies kept by the user for backup purposes.

Brand and product names mentioned in this publication may or may not be copyrights and/or registered trademarks of their respective companies. They are mentioned for identification purposes only and are not intended as an endorsement of that product or its manufacturer.

Version 1.0
September 2021

Trademarks

Pentium and Celeron are trademarks of Intel Corporation.
Windows® is a registered trademark of Microsoft Corporation.
Other brand and product names are trademarks and /or registered trademarks of their respective companies.

About this Manual

This manual is intended for service personnel who have completed sufficient training to undertake the maintenance and inspection of personal computers.

It is organized to allow you to look up basic information for servicing and/or upgrading components of the ***NL40MU1 / NL41MU1 / NL40MU2 / NL41MU2*** series notebook PC.

The following information is included:

Chapter 1, Introduction, provides general information about the location of system elements and their specifications.
Chapter 2, Disassembly, provides step-by-step instructions for disassembling parts and subsystems and how to upgrade elements of the system.

Appendix A, Part Lists
Appendix B, Schematic Diagrams

IMPORTANT SAFETY INSTRUCTIONS

Follow basic safety precautions, including those listed below, to reduce the risk of fire, electric shock and injury to persons when using any electrical equipment:

1. Do not use this product near water, for example near a bath tub, wash bowl, kitchen sink or laundry tub, in a wet basement or near a swimming pool.
2. Avoid using a telephone (other than a cordless type) during an electrical storm. There may be a remote risk of electrical shock from lightning.
3. Do not use the telephone to report a gas leak in the vicinity of the leak.
4. Use only the power cord and batteries indicated in this manual. Do not dispose of batteries in a fire. They may explode. Check with local codes for possible special disposal instructions.
5. This product is intended to be supplied by a Listed Power Unit with an AC Input of 100 - 240V, 50 - 60Hz, DC Output of 19V, 2.37A (**45** Watts) minimum AC/DC Adapter.

FCC Statement

This device complies with Part 15 of the FCC Rules. Operation is subject to the following two conditions:
This device may not cause harmful interference.
This device must accept any interference received, including interference that may cause undesired operation.

Instructions for Care and Operation

The notebook computer is quite rugged, but it can be damaged. To prevent this, follow these suggestions:

1. **Don't drop it, or expose it to shock.** If the computer falls, the case and the components could be damaged.

Do not expose the computer to any shock or vibration. 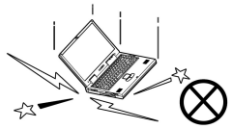	*Do not place it on an unstable surface.* 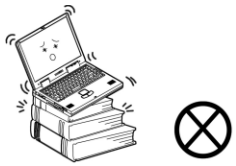	*Do not place anything heavy on the computer.* 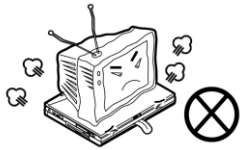

2. **Keep it dry, and don't overheat it.** Keep the computer and power supply away from any kind of heating element. This is an electrical appliance. If water or any other liquid gets into it, the computer could be badly damaged.

Do not expose it to excessive heat or direct sunlight. 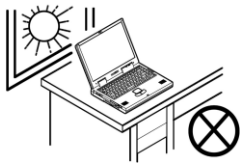	*Do not leave it in a place where foreign matter or moisture may affect the system.*	*Don't use or store the computer in a humid environment.* 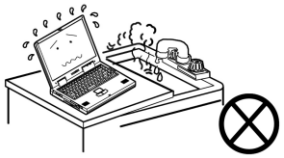	*Do not place the computer on any surface which will block the vents.* 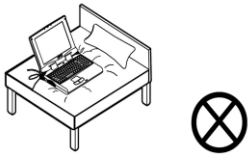

3. **Follow the proper working procedures for the computer**. Shut the computer down properly and don't forget to save your work. Remember to periodically save your data as data may be lost if the battery is depleted.

Do not turn off the power until you properly shut down all programs. 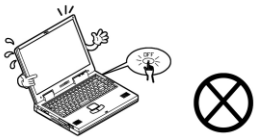	*Do not turn off any peripheral devices when the computer is on.* 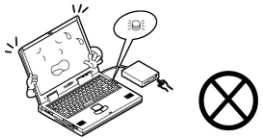	*Do not disassemble the computer by yourself.*	*Perform routine maintenance on your computer.*

4. **Avoid interference.** Keep the computer away from high capacity transformers, electric motors, and other strong magnetic fields. These can hinder proper performance and damage your data.
5. **Take care when using peripheral devices**.

Use only approved brands of peripherals.	*Unplug the power cord before attaching peripheral devices.*
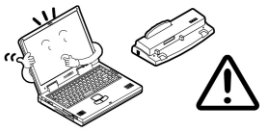	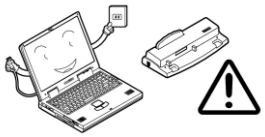

Power Safety

The computer has specific power requirements:

- Only use a power adapter approved for use with this computer.
- Your AC adapter may be designed for international travel but it still requires a steady, uninterrupted power supply. If you are unsure of your local power specifications, consult your service representative or local power company.
- The power adapter may have either a 2-prong or a 3-prong grounded plug. The third prong is an important safety feature; do not defeat its purpose. If you do not have access to a compatible outlet, have a qualified electrician install one.
- When you want to unplug the power cord, be sure to disconnect it by the plug head, not by its wire.
- Make sure the socket and any extension cord(s) you use can support the total current load of all the connected devices.
- Before cleaning the computer, make sure it is disconnected from any external power supplies.

Power Safety Warning

Before you undertake any upgrade procedures, make sure that you have turned off the power, and disconnected all peripherals and cables (including telephone lines and power cord). It is advisable to also remove your battery in order to prevent accidentally turning the machine on.

Do not plug in the power cord if you are wet.	*Do not use the power cord if it is broken.*	*Do not place heavy objects on the power cord.*
	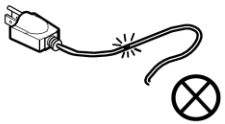	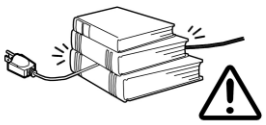

Battery Precautions

- Only use batteries designed for this computer. The wrong battery type may explode, leak or damage the computer.
- Do not continue to use a battery that has been dropped, or that appears damaged (e.g. bent or twisted) in any way. Even if the computer continues to work with a damaged battery in place, it may cause circuit damage, which may possibly result in fire.
- Recharge the batteries using the notebook's system. Incorrect recharging may make the battery explode.
- Do not try to repair a battery pack. Refer any battery pack repair or replacement to your service representative or qualified service personnel.
- Keep children away from, and promptly dispose of a damaged battery. Always dispose of batteries carefully. Batteries may explode or leak if exposed to fire, or improperly handled or discarded.
- Keep the battery away from metal appliances.
- Affix tape to the battery contacts before disposing of the battery.
- Do not touch the battery contacts with your hands or metal objects.

Battery Guidelines

The following can also apply to any backup batteries you may have.

- If you do not use the battery for an extended period, then remove the battery from the computer for storage.
- Before removing the battery for storage charge it to 60% - 70%.
- Check stored batteries at least every 3 months and charge them to 60% - 70%.

Battery Disposal

The product that you have purchased contains a rechargeable battery. The battery is recyclable. At the end of its useful life, under various state and local laws, it may be illegal to dispose of this battery into the municipal waste stream. Check with your local solid waste officials for details in your area for recycling options or proper disposal.

Caution

Danger of explosion if battery is incorrectly replaced. Replace only with the same or equivalent type recommended by the manufacturer. Discard used battery according to the manufacturer's instructions.

Battery Level

Click the battery icon in the taskbar to see the current battery level and charge status. A battery that drops below a level of 10% will not allow the computer to boot up. Make sure that any battery that drops below 10% is recharged within one week.

Related Documents

You may also need to consult the following manual for additional information:

User's Manual on CD/DVD

This describes the notebook PC's features and the procedures for operating the computer and its ROM-based setup program. It also describes the installation and operation of the utility programs provided with the notebook PC.

System Startup

1. Remove all packing materials.
2. Place the computer on a stable surface.
3. Insert the battery and make sure it is locked in position.
4. Securely attach any peripherals you want to use with the computer (e.g. keyboard and mouse) to their ports.
5. **When first setting up the computer use the following procedure** (as to safeguard the computer during shipping, the battery will be locked to not power the system until first connected to the AC/DC adapter and initially set up as below):
   - Attach the AC/DC adapter cord to the DC-In jack on the right of the computer, then plug the AC power cord into an outlet, and connect the AC power cord to the AC/DC adapter. The battery will now be unlocked.
6. Use one hand to raise the lid/LCD to a comfortable viewing angle (do not exceed 180 degrees); use the other hand (as illustrated in Figure 1) to support the base of the computer (**Note**: **Never** lift the computer by the lid/LCD).
7. Press the power button on the left side of the computer to turn the computer "on" (note that the lid/LCD must be open for the power button to function).

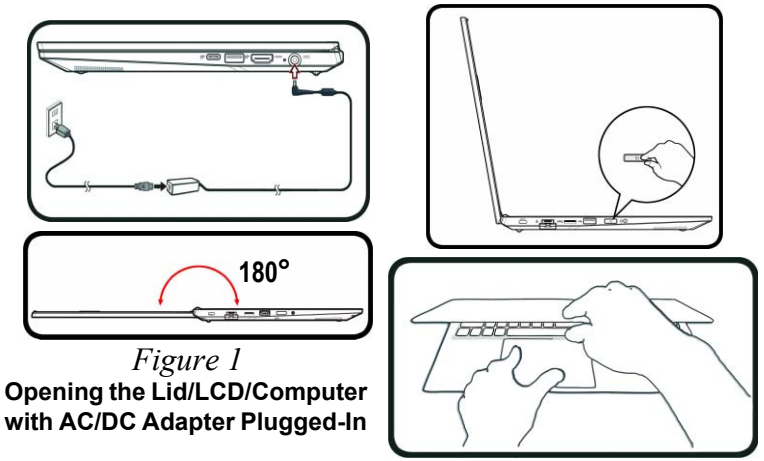

Figure 1
Opening the Lid/LCD/Computer with AC/DC Adapter Plugged-In

Powering the Computer On

After every disassembly, make sure that the bottom case's screws are all inserted and tightened before turning the computer on.

Shut Down

Note that you should always shut your computer down by choosing the **Shut down** command in **Windows** (see below). This will help prevent hard disk or system problems.

Click **Settings** in the **Charms Bar** (use the **Windows Logo Key** + **C** key combination to access the Charms Bar) and choose **Shut down** from the **Power** menu.

Or

Choose **Shut down or sign out > Shut down** from the context menu (use the **Windows Logo Key** + **X** key combination to access the context menu).

Contents

Introduction 1-1

Overview 1-1
Specifications 1-2
External Locator - Top View with LCD Panel Open 1-4
External Locator - Front & Right Side Views 1-5
External Locator - Left Side & Rear View 1-6
External Locator - Bottom View 1-7
Mainboard Overview - Top (Key Parts) 1-8
Mainboard Overview - Bottom (Key Parts) 1-9
Mainboard Overview - Top (Connectors) 1-10
Mainboard Overview - Bottom (Connectors) 1-11

Disassembly 2-1

Overview 2-1
Maintenance Tools 2-2
Connections 2-2
Maintenance Precautions 2-3
Disassembly Steps 2-4
Removing the Battery 2-5
Removing the System Memory (RAM) 2-9
Removing the Wireless LAN Module 2-11
Wireless LAN, and Combo Module Cables 2-12
Removing and Installing the M.2 SSD Module 2-13
Removing the CCD 2-14

Part Lists A-1

Part List Illustration Location A-2
Top with FP A-3
Top without FP A-4
Bottom A-5
LCD A-6
MB A-7

Schematic Diagrams.....B-1

System Block Diagram B-2
Processor 1/12 .....B-3
Processor 2/12 .....B-4
Processor 3/12 .....B-5
Processor 4/12 .....B-6
Processor 5/12 .....B-7
Processor 6/12 .....B-8
Processor 7/12 .....B-9
Processor 8/12 .....B-10
Processor 9/12 .....B-11
Processor 10/12 .....B-12
Processor 11/12 .....B-13
Processor 12/12 .....B-14
DDR4 SO-DIMM_A B-15
DDR4 SO-DIMM_B B-16
HDMI B-17
Panel B-18
USB Type-C ANX7443 .....B-19
ANX7411, Type-C B-20
ASM1543 .....B-21
LED KB, LED B-22
SATA HDD, TPM B-23
Audio Codec B-24
KBC ITE IT5570 .....B-25
WLAN B-26
M Key PCIE SSD B-27
3G/LTE B-28
USB Type-A B-29

Conn, CCD, Fan, TP B-30
VDD3, VDD5 ..... B-31
VDDQ, VDDQ_VTT, 1.8VA B-32
3.3VA, 1.8V B-33
2.5V, VCCST, VCCSTG B-34
Power PD Function B-35
NCP81269 ..... B-36
3.3V, 5V, 3VS, 5VS, CTL B-37
Charger, AC IN B-38
VCCIN B-39
RTL8411B B-40
Multi Board RTS5227S / OZ711 ..... B-41
LAN Transformer B-42
LAN Board Connector B-43
14” I/O Board B-44
15” I/O Board 1 ..... B-45
15” I/O Board 2 ..... B-46
PWR Button Board B-47
Power Sequence B-48

Chapter 1: Introduction

Overview

This manual covers the information you need to service or upgrade the ***NL40MU1 / NL41MU1 / NL40MU2 / NL41MU2*** series notebook computer. Information about operating the computer (e.g. getting started, and the *Setup* utility) is in the *User's Manual*. Information about dri-vers (e.g. VGA & audio) is also found in the *User's Manual*. The manual is shipped with the computer.

Operating systems (e.g. *Window 10,* etc.) have their own manuals as do application softwares (e.g. word processing and database programs). If you have questions about those programs, you should consult those manuals.

The ***NL40MU1 / NL41MU1 / NL40MU2 / NL41MU2*** series notebook is designed to be upgradeable. See ***Disassembly on page 2 - 1*** for a detailed description of the upgrade procedures for each specific component. Please take note of the warning and safety information indicated by the "" symbol.

The balance of this chapter reviews the computer's technical specifications and features.

Specifications

Latest Specification Information

The specifications listed here are correct at the time of sending them to the press. Certain items (particularly processor types/speeds) may be changed, delayed or updated due to the manufacturer's release schedule. Check with your service center for more details.

CPU

The CPU is not a user serviceable part. Accessing the CPU in any way may violate your warranty.

Processor Options

Intel® Core™ i7 Processor
i7-1195G7 (1.30GHz)
i7-1165G7 (1.20GHz)
Intel® Core™ i5 Processor
i5-1155G7 (1.00GHz)
i5-1135G7 (0.90GHz)
Intel® Core™ i3 Processor
i3-1115G4 (1.70GHz)

BIOS

128Mb SPI Flash ROM
Insyde BIOS

Memory

Dual Channel DDR4
Two 260 Pin SO-DIMM Sockets Supporting **DDR4 3200MHz** Memory
Memory Expandable up to 32GB
Compatible with 4GB, 8GB or 16GB Modules

(The real memory operating frequency depends on the FSB of the processor.)

LCD Options

14" (35.56cm), 16:9, HD (1366x768) /FHD (1920x1080)

Card Reader

MicroSD Card Reader

Storage

One M.2 PCIe **Gen4 x4** Solid State Drive (SSD)

Video Adapter

Intel Iris X Graphics (i7-1195G7/i5-1155G7/i5-1135G7)
HDR Support
Rec. 2020 (Wide Color Gamut)
Microsoft DirectX® 12 Compatible
Intel Iris Graphics (i7-1165G7)
HDR Support
Rec. 2020 (Wide Color Gamut)
Microsoft DirectX® 12 Compatible
Intel UHD Graphics (i3-1115G4)
HDR Support
Rec. 2020 (Wide Color Gamut)
Microsoft DirectX® 12 Compatible

Pointing Device

Built-in Touchpad (with Microsoft PTP Multi Gesture & Scrolling Functionality)

Keyboard

Keyboard (with Numeric Keypad)
Or
(**Factory Option**) **White-**LED Keyboard (with Numeric Keypad)

Audio

High Definition Audio Compliant Interface
2 * Built-In Speakers
Built-In Array Microphone
Or
(Factory Option) Built-In Microphone

Security

Security (Kensington® Type) Lock Slot
BIOS Password
Intel PTT for Systems Without TPM Hardware
(**Factory Option**) TPM 2.0
(**Factory Option**) Fingerprint Sensor

M.2 Slots

Slot 1 for **WLAN and Bluetooth** Combo Module
Slot 2 for **PCIe Gen4 x4 SSD**

Communication

Built-In 10/100/1000Mb Base-TX Ethernet LAN
1.0M HD Webcam
(**Factory Option for Model B**) **4G** M.2 Module

WLAN/ Bluetooth M.2 Modules:

(**Factory Option**) Intel® Dual Band Wi-Fi 6 AX200, 2x2 AX Wireless LAN + Bluetooth
(**Factory Option**) Intel® Dual Band Wi-Fi 6 AX201, 2x2 AX Wireless LAN + Bluetooth
(**Factory Option**) Intel® Dual Band Wi-Fi 5 Wireless-AC 9462, 1x1 AC Wireless LAN + Bluetooth
(**Factory Option**) Intel® Dual Band Wi-Fi 5 Wireless-AC 9560, 2x2 AC Wireless LAN + Bluetooth

Interface

One USB 3.2 Gen 2 Type-C Port*
Or
(**Factory Option**) One USB 3.2 Gen 2 Type-C Port with DisplayPort and Power Delivery (DC-In)
**The maximum amount of current supplied by USB Type-C ports is 500mA (USB 2.0)/900mA (USB3.2).*

One USB 3.2 Gen 2 Type-A Port
Or
(**Factory Option**) One Powered USB 3.2 Gen 2 Type-A Port
One HDMI-Out Port
One 2-In-1 Audio Jack (Headphone / Microphone)
One RJ-45 LAN Jack
One DC-in Jack
One USB 2.0 Port
Or
(**Factory Option**) One USB 3.1 Gen 1 Type-A Port

Power

Full Range AC/DC Adapter
AC Input: 100 - 240V, 50 - 60Hz
DC Output: 19V, 2.37A (**45W**)

Embedded 3 Cell Smart Lithium-Ion Battery Pack, 36WH
(**Factory Option**) Embedded 4 Cell Smart Lithium-Ion Battery Pack, 49WH

Environmental Spec

Temperature
Operating: 5°C - 35°C
Non-Operating: -20°C - 60°C
Relative Humidity
Operating: 20% - 80%
Non-Operating: 10% - 90%

Dimensions & Weight

324.9mm (w) * 219.5mm (d) * 19.4mm (h)
1.29kg (Barebone with 36WH Battery)
1.35kg (Barebone with 48WH Battery)

External Locator - Top View with LCD Panel Open

Figure 1
Top View

1. Webcam
2. *Camera LED
   When the PC camera is in use, the LED will be illuminated in white.
3. Built-In Array Microphone
   Or
   (**Factory Option**) Built-In Microphone
4. Display
5. Vent
6. LED Indicators
7. Keyboard
8. Touchpad & Buttons
9. (**Factory Option**) Fingerprint Sensor

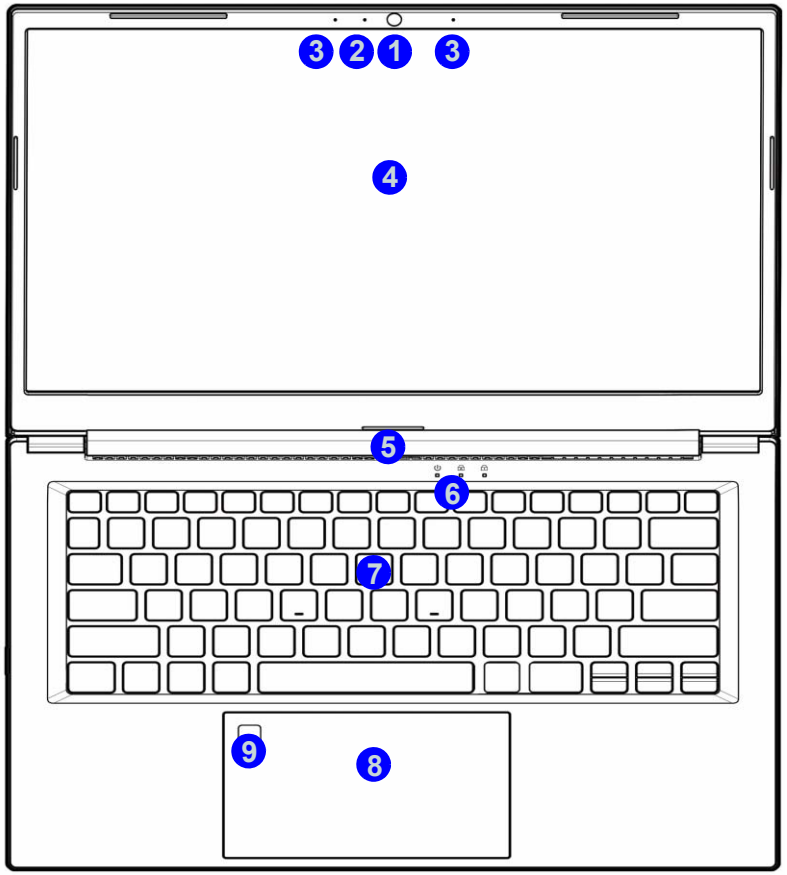

External Locator - Front & Right Side Views

FRONT VIEW

Figure 2
Front View

RIGHT SIDE VIEW

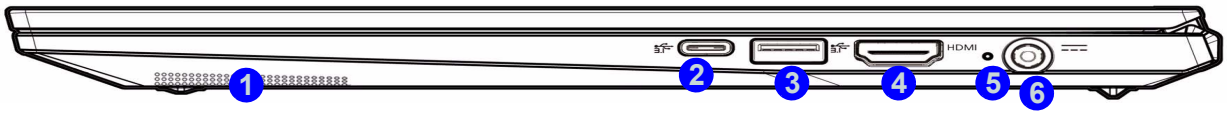

Figure 3
Right Side View

1. Speaker
2. USB 3.2 Gen 2 Type-C Port Or (**Factory Option**) USB 3.2 Gen 2 Type-C Port with DisplayPort and Power Delivery (DC-In)
3. USB 3.2 Gen 2 Type-A Port Or (**Factory Option**) Powered USB 3.2 Gen 2 Type-A Port
4. HDMI-Out Port
5. Battery Power LED Indicator
6. DC-In Jack

External Locator - Left Side & Rear View

Figure 4
Left Side View

1. Security Lock Slot
2. RJ-45 LAN Jack
3. MicroSD Card Reader
4. USB 2.0 Port Or (**Factory Option**) USB 3.1 Gen 1 Type-A Port
5. Power Button
6. 2-In-1 Audio Jack (Headphone and Microphone)
7. Speaker

LEFT SIDE VIEW

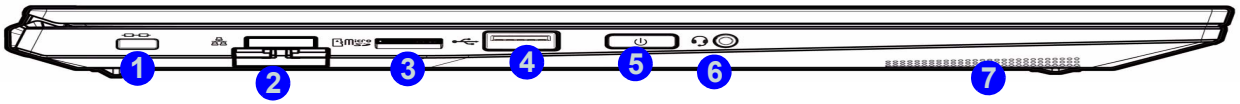

Figure 5
Rear View

REAR VIEW

External Locator - Bottom View

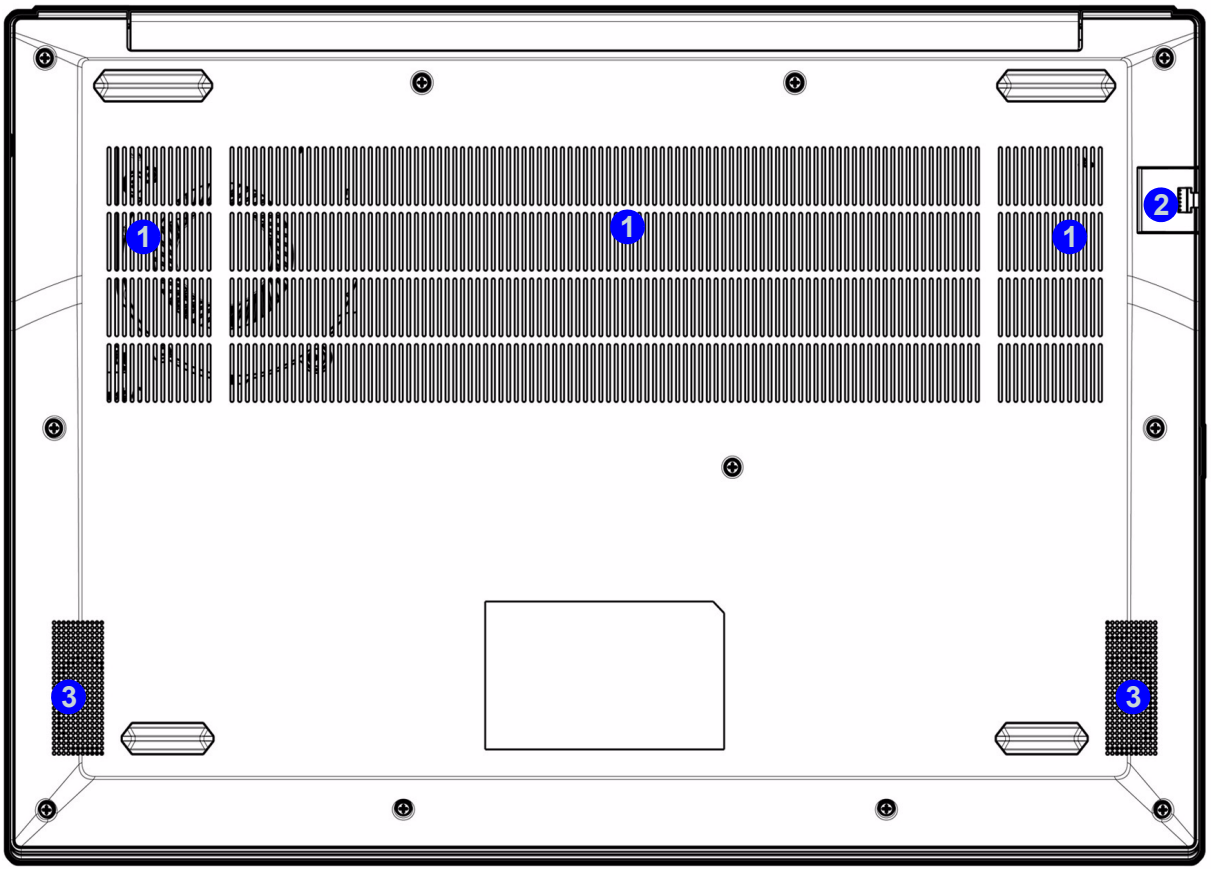

Figure 6
Bottom View

1. Vent
2. RJ-45 LAN Jack
3. Speakers

Overheating

To prevent your computer from overheating, make sure nothing blocks any vent while the computer is in use.

Figure 7
Mainboard Top Key Parts

Mainboard Overview - Top (Key Parts)

1. KBC-ITE IT5570

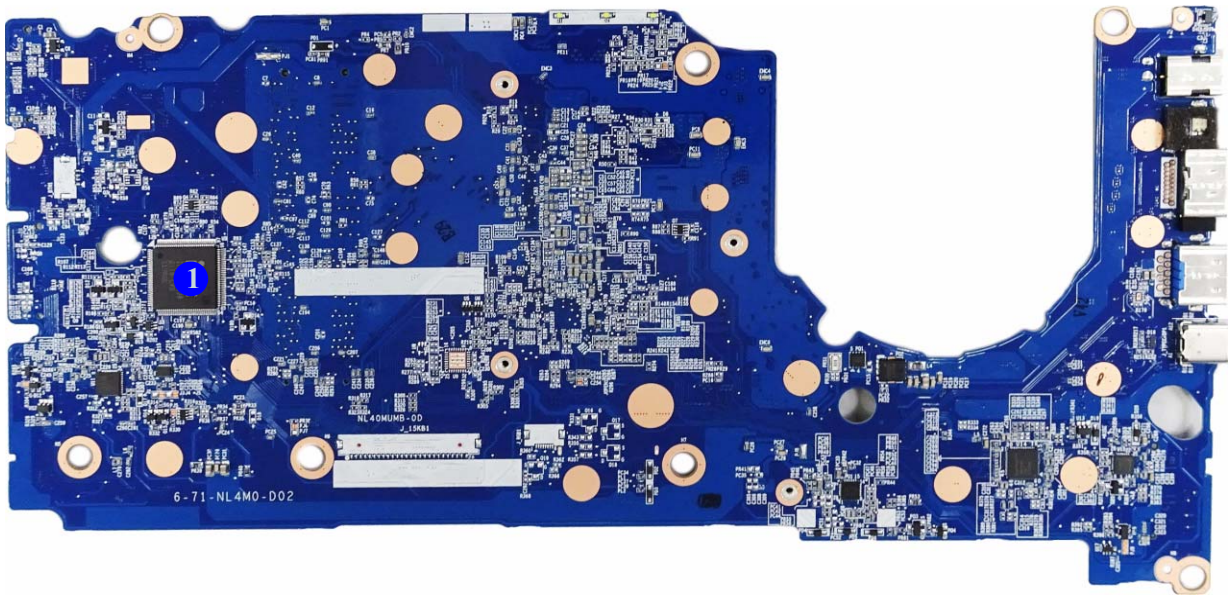

Mainboard Overview - Bottom (Key Parts)

Figure 8
Mainboard Bottom Key Parts

1. CPU
2. Memory Slots DDR4 SO-DIMM

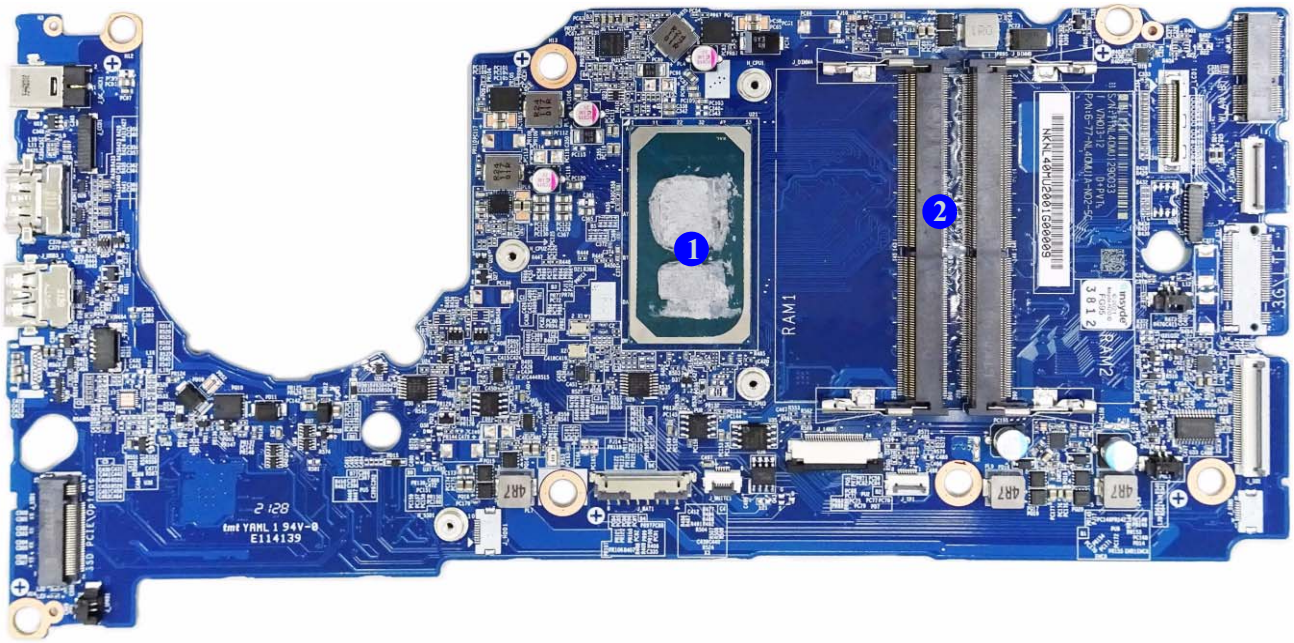

Mainboard Overview - Top (Connectors)

Figure 9
Mainboard Top Connectors

1. DC-In Jack
2. HDMI-Out Port
3. USB 3.2 Gen 2 Type-A Port
4. USB 3.2 Gen 2 Type-C Port

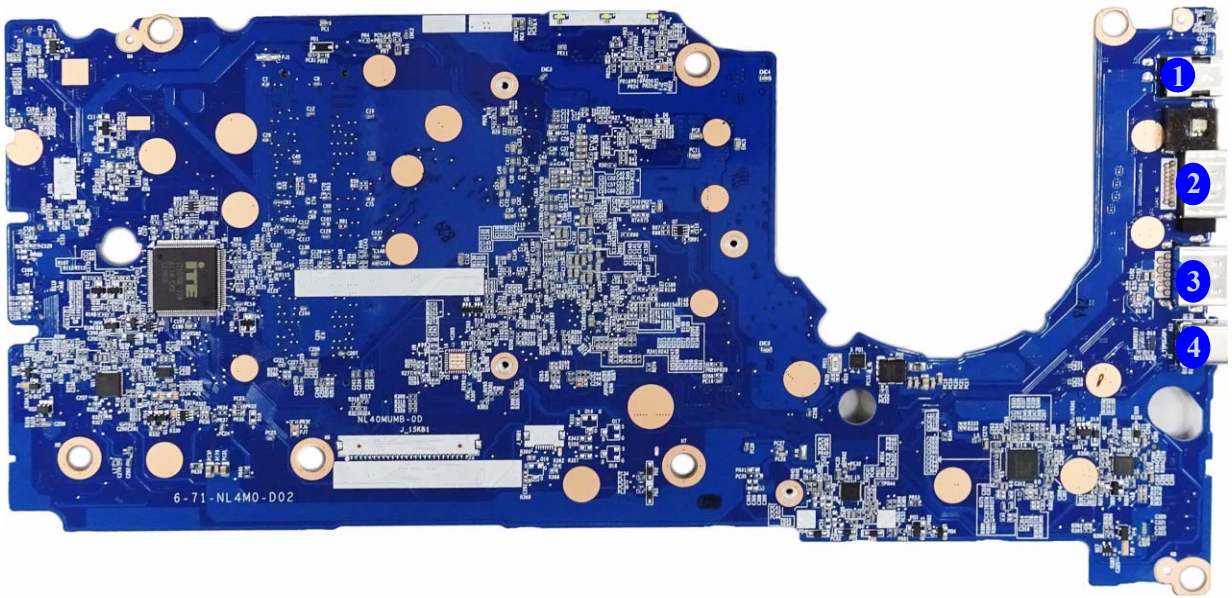

Mainboard Overview - Bottom (Connectors)

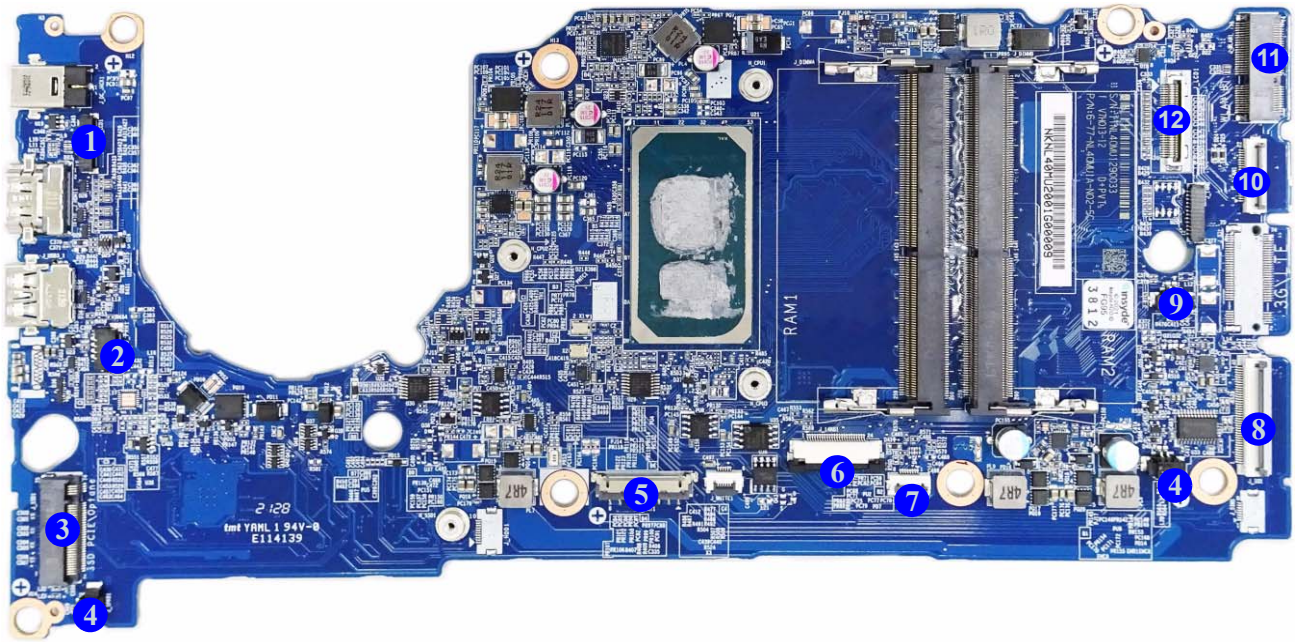

Figure 10
Mainboard Bottom Connectors

1. CCD Cable Connector
2. Fan Connector
3. M.2 Card Connector
4. Speaker Connecto
5. Battery Connector
6. Keyboard Connector
7. Touchpad Connector
8. USB Board Connector
9. CMOS Battery Connector
10. LAN Board Connector
11. WLAN/BT Connector
12. LCD Cable Connector

Chapter 2: Disassembly

Overview

This chapter provides step-by-step instructions for disassembling the ***NL40MU1 / NL41MU1 / NL40MU2 / NL41MU2*** series notebook's parts and subsystems. When it comes to reassembly, reverse the procedures (unless otherwise indicated).

We suggest you completely review any procedure before you take the computer apart.

Procedures such as upgrading/replacing the RAM, optical device and hard disk are included in the User's Manual but are repeated here for your convenience.

To make the disassembly process easier each section may have a box in the page margin. Information contained under the figure # will give a synopsis of the sequence of procedures involved in the disassembly procedure. A box with a lists the relevant parts you will have after the disassembly process is complete. **Note**: The parts listed will be for the disassembly procedure listed ONLY, and not any previous disassembly step(s) required. Refer to the part list for the previous disassembly procedure. The amount of screws you should be left with will be listed here also.

A box with a will also provide any possible helpful information. A box with a contains warnings.

An example of these types of boxes are shown in the sidebar.

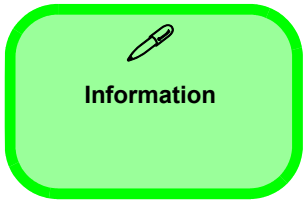

NOTE: All disassembly procedures assume that the system is turned **OFF**, and disconnected from any power supply (the battery is removed too).

Maintenance Tools

The following tools are recommended when working on the notebook PC:

- M3 Philips-head screwdriver
- M2.5 Philips-head screwdriver (magnetized)
- M2 Philips-head screwdriver
- Small flat-head screwdriver
- Pair of needle-nose pliers
- Anti-static wrist-strap

Connections

Connections within the computer are one of four types:

Locking collar sockets for ribbon connectors	To release these connectors, use a small flat-head screwdriver to gently pry the locking collar away from its base. When replacing the connection, make sure the connector is oriented in the same way. The pin1 side is usually not indicated.
Pressure sockets for multi-wire connectors	To release this connector type, grasp it at its head and gently rock it from side to side as you pull it out. Do not pull on the wires themselves. When replacing the connection, do not try to force it. The socket only fits one way.
Pressure sockets for ribbon connectors	To release these connectors, use a small pair of needle-nose pliers to gently lift the connector away from its socket. When replacing the connection, make sure the connector is oriented in the same way. The pin1 side is usually not indicated.
Board-to-board or multi-pin sockets	To separate the boards, gently rock them from side to side as you pull them apart. If the connection is very tight, use a small flat-head screwdriver - use just enough force to start.

Maintenance Precautions

The following precautions are a reminder. To avoid personal injury or damage to the computer while performing a removal and/or replacement job, take the following precautions:

1. **Don't drop it**. Perform your repairs and/or upgrades on a stable surface. If the computer falls, the case and other components could be damaged.
2. **Don't overheat it**. Note the proximity of any heating elements. Keep the computer out of direct sunlight.
3. **Avoid interference**. Note the proximity of any high capacity transformers, electric motors, and other strong magnetic fields. These can hinder proper performance and damage components and/or data. You should also monitor the position of magnetized tools (i.e. screwdrivers).
4. **Keep it dry**. This is an electrical appliance. If water or any other liquid gets into it, the computer could be badly damaged.
5. **Be careful with power**. Avoid accidental shocks, discharges or explosions.
   - Before removing or servicing any part from the computer, turn the computer off and detach any power supplies.
   - When you want to unplug the power cord or any cable/wire, be sure to disconnect it by the plug head. Do not pull on the wire.
6. **Peripherals** – Turn off and detach any peripherals.
7. **Beware of static discharge**. ICs, such as the CPU and main support chips, are vulnerable to static electricity. Before handling any part in the computer, discharge any static electricity inside the computer. When handling a printed circuit board, do not use gloves or other materials which allow static electricity buildup. We suggest that you use an anti-static wrist strap instead.
8. **Beware of corrosion**. As you perform your job, avoid touching any connector leads. Even the cleanest hands produce oils which can attract corrosive elements.
9. **Keep your work environment clean**. Tobacco smoke, dust or other air-born particulate matter is often attracted to charged surfaces, reducing performance.
10. **Keep track of the components**. When removing or replacing any part, be careful not to leave small parts, such as screws, loose inside the computer.

Power Safety Warning

Before you undertake any upgrade procedures, make sure that you have turned off the power, and disconnected all peripherals and cables (including telephone lines and power cord). It is advisable to also remove your battery in order to prevent accidentally turning the machine on.

Cleaning

Do not apply cleaner directly to the computer, use a soft clean cloth.
Do not use volatile (petroleum distillates) or abrasive cleaners on any part of the computer.
(For Computer Models Supplied with Light Blue Cleaning Cloth) Some computer models in this series come supplied with a light blue cleaning cloth. To clean the computer case with this cloth follow the instructions below.

- Power off the computer and peripherals.
- Disconnect the AC/DC adapter from the computer.
- Use a little water to dampen the cloth slightly.
- Clean the computer case with the cloth.
- Dry the computer with a dry cloth, or allow it time to dry before turning on.
- Reconnect the AC/DC adapter and turn the computer on.

Disassembly Steps

The following table lists the disassembly steps, and on which page to find the related information. **PLEASE PERFORM THE DISASSEMBLY STEPS IN THE ORDER INDICATED.**

To remove the Battery:

1. Remove the battery *page 2 - 5*

To remove the System Memory:

1. Remove the battery *page 2 - 5*
2. Remove the system memory *page 2 - 9*

To remove the Wireless LAN Module:

1. Remove the battery *page 2 - 5*
2. Remove the WLAN *page 2 - 11*

To remove and install the M.2 SSD Module:

1. Remove the battery *page 2 - 5*
2. Remove the SSD module *page 2 - 13*

To remove the CCD Module:

1. Remove the battery *page 2 - 5*
2. Remove the CCD module *page 2 - 14*

Removing the Battery

Note that battery removal procedure will differ depending on the battery type installed:

- See 36WH Battery Upgrade Process on *page 2 - 5*
- See 48WH Battery Upgrade Process on *page 2 - 7*

36WH Battery Upgrade Process

1. Turn **off** the computer, turn it over.
2. Remove screws 1 - 11 on the bottom case (*Figure 1a*).
3. Note to remove screws 6 - 9, do so with the screwdriver angled at about 90 degrees to the computer surface as shown (*Figure 1b*).
4. Carefully lift the bottom case 12 up.
5. The battery will be visible at point 13 on the computer (*Figure 1c*).

Figure 1
Battery Removal - 36WH

a. Remove the screws.
b. Remove the bottom case.
c. Locate the battery.

a.

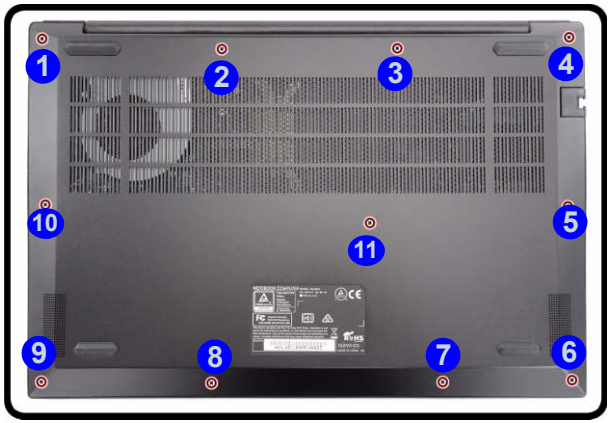

b.

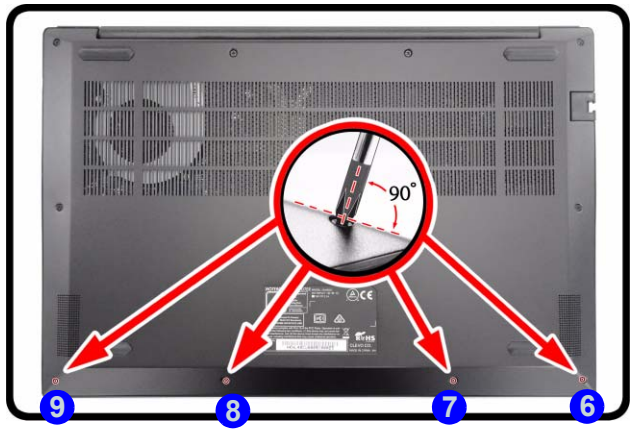

c.

12. Bottom Case

- 11 Screws

Figure 2
Battery Removal - 36WH (cont'd.)

c. Disconnect the cable and remove the screws.
d. Lift the battery off the computer.
f. Close the bottom cover as shown.

6. Carefully disconnect the cable 14, then remove screws 15 - 18 (***Figure 2d***).
7. Lift the battery 19 off the computer (***Figure 2e***).
8. Reverse the process to install a new battery (do not forget to replace all the screws and bottom cover).
9. Make sure you close the bottom cover by applying pressure at point 20 as shown (***Figure 2f***).

d.

e.

f.

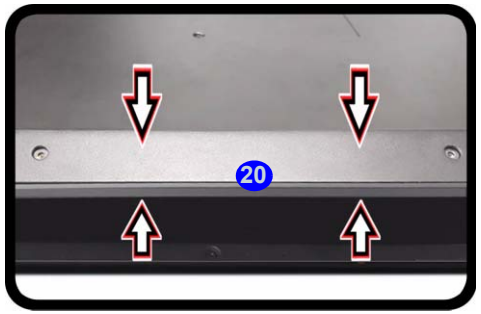

Powering the Computer On

After every disassembly, make sure that the bottom case's screws are all inserted and tightened before turning the computer on.

19. Battery

- 4 Screws

48WH Battery Upgrade Process

1. Turn **off** the computer, turn it over.
2. Remove screws 1 - 11 on the bottom case (***Figure 1a***).
3. Note to remove screws 6 - 9, do so with the screwdriver angled at about 90 degrees to the computer surface as shown (***Figure 1b***).
4. Carefully lift the bottom case 12 up.
5. The battery will be visible at point 13 on the computer (***Figure 1c***).

Figure 3
Battery Removal - 48WH

a. Remove the screws.
b. Remove the bottom case.
c. Locate the battery.

a.

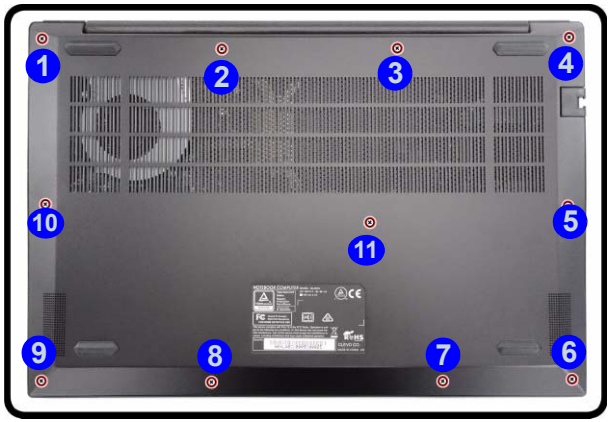

b.

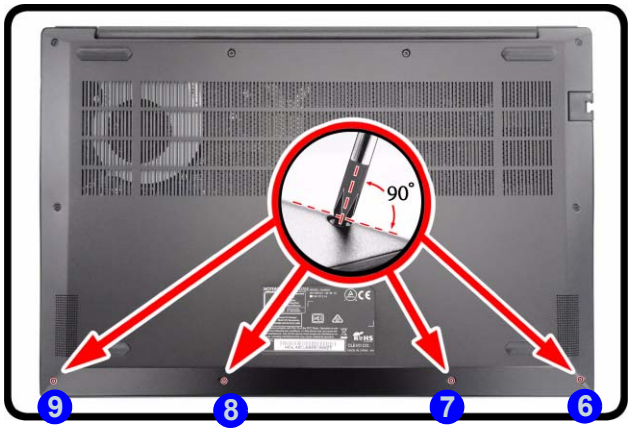

c.

12. Bottom Case

- 11 Screws

Figure 4
Battery Removal - 48WH (cont'd.)

c. Disconnect the cable and remove the screws.
d. Lift the battery off the computer.
f. Close the bottom cover as shown.

6. Carefully disconnect the cable 14, then remove screws 15 - 18 (***Figure 2d***).
7. Lift the battery 19 off the computer (***Figure 2e***).
8. Reverse the process to install a new battery (do not forget to replace all the screws and bottom cover).
9. Make sure you close the bottom cover by applying pressure at point 20 as shown (***Figure 2f***).

d.

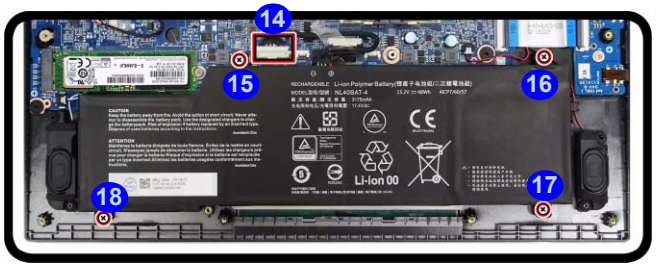

f.

e.

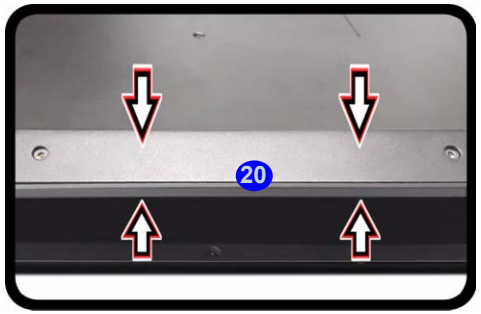

Powering the Computer On

After every disassembly, make sure that the bottom case's screws are all inserted and tightened before turning the computer on.

19. Battery

- 4 Screws

Removing the System Memory (RAM)

The computer has two memory sockets for 260 pin Small Outline Dual In-line Memory Modules (SO-DIMM) supporting DDR4 2666MHz. The main memory can be expanded up to 32GB. The total memory size is automatically detected by the POST routine once you turn on your computer.

Memory Upgrade Process

1. Turn **off** the computer, turn it over to remove the battery (***page 2 - 5***).
2. The RAM modules will be visible at point 1 on the mainboard (***Figure 5b***).
3. Gently pull the two release latches (2 & 3) on the sides of the memory socket in the direction indicated by the arrows (***Figure 5b***).
4. The RAM module 4 will pop-up (***Figure 5c***), and you can then remove it.

Figure 5
RAM Module Removal

a. The RAM modules will be visible at point 1 on the mainboard.
b. Pull the release latches.
c. Remove the module.

a.

b.

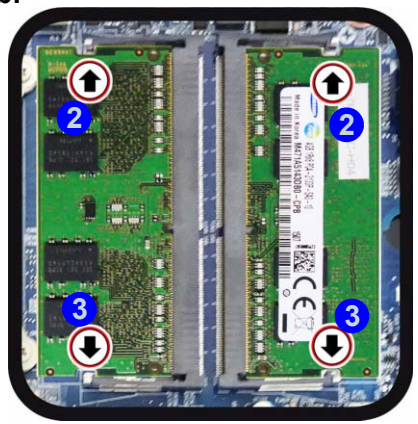

c.

Contact Warning

Be careful not to touch the metal pins on the module's connecting edge. Even the cleanest hands have oils which can attract particles, and degrade the module's performance.

Single Memory Module Installation

If your computer has a single memory module, then insert the module into the **Channel 0 (JDIMM1 / RAM1)** socket.

4. RAM Module

5. Pull the latches to release the second module if necessary.
6. Insert a new module holding it at about a 30° angle and fit the connectors firmly into the memory slot.
7. The module will only fit one way as defined by its pin alignment. Make sure the module is seated as far into the slot as it will go. DO NOT FORCE IT; it should fit without much pressure.
8. Press the module in and down towards the mainboard until the slot levers click into place to secure the module.
9. Replace the bottom case and the screws (see ***page 2 - 5***).
10. Restart the computer to allow the BIOS to register the new memory configuration as it starts up.

Removing the Wireless LAN Module

1. Turn **off** the computer, turn it over to remove the battery (***page 2 - 5***).
2. The Wireless LAN module will be visible at point 1 on the mainboard (***Figure 6a***).
3. Carefully disconnect the cables 2 & 3, and then remove the screw 4 (***Figure 6b***)
4. The Wireless LAN module 5 (***Figure 6c***) will pop-up, and you can remove it from the computer.
5. Reverse the process to install a new module (do not forget to replace all the screws and bottom cover).

a.

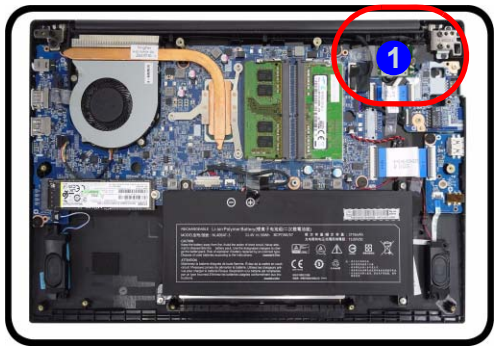

b.

c.

Figure 6
Wireless LAN Module Removal

a. Locate the WLAN.
b. Disconnect the cable and remove the screw.
c. The WLAN module will pop up and lift it out of the computer.

Note: Make sure you reconnect the antenna cable to the "1 + 2" socket (***Figure 6b***).

5.Wireless LAN Module

- 1 Screw

Wireless LAN, and Combo Module Cables

Note that the cables for connecting to the antennae on WLAN, WLAN & Bluetooth Combo, 3G and LTE modules are not labelled. The cables/covers (each cable will have either a black or transparent cable cover) are color coded for identification as outlined in the table below.

Module Type	Antenna Type	Cable Color	Cable Cover Type
WLAN/WLAN & Bluetooth Combo	WL 1	Black	Transparent
	WL 2	Black	White

Cable 1 is usually connected to antenna 1 (Main) on the module, and cable 2 to antenna 2 (Aux).

Removing and Installing the M.2 SSD Module

M.2 SSD Removal Procedure

1. Turn **off** the computer, turn it over to remove the battery (***page 2 - 5***).
2. The M.2 SSD module will be visible at point 1 on the mainboard (***Figure 7a***).
3. Remove the screw 2 (***Figure 7b***)
4. The M.2 SSD module 3 (***Figure 7c***) will pop-up, and you can remove it from the computer.
5. Reverse the process to install a new module (do not forget to replace the thermal pad, screws and bottom cover).

Figure 7
M.2 SSD Module Removal

a. Locate the M.2 SSD.
b. Remove the screw.
c. The M.2 SSD module will pop up.

a.

b.

c.

Thermal Pad

Make sure to place the thermal pad's adhesive side down on the module's surface as illustrated. Insert the module with the thermal pad facing the mainboard.

3.M2 SATA Module

- 1 Screw

Figure 8
CCD Removal

a. Run your fingers around the inner frame of the LCD panel at the points indicated by the arrows.
b. Lay the computer down on a flat surface with the top case up forming a 130 degree angle. Lift the LCD front panel upwards.

Removing the CCD

1. Turn **off** the computer, turn it over to remove the battery (***page 2 - 5***).
2. Lift up the inner frame and run your fingers around the inner frame of the LCD panel at the points as indicated by the arrows 1 - 4 (***Figure 8a***).
3. Lay the computer down on a flat surface with the top case up forming a 90 degree angle. Carefully lift and remove the LCD front cover 5 upwards (***Figure 8b***).

a.

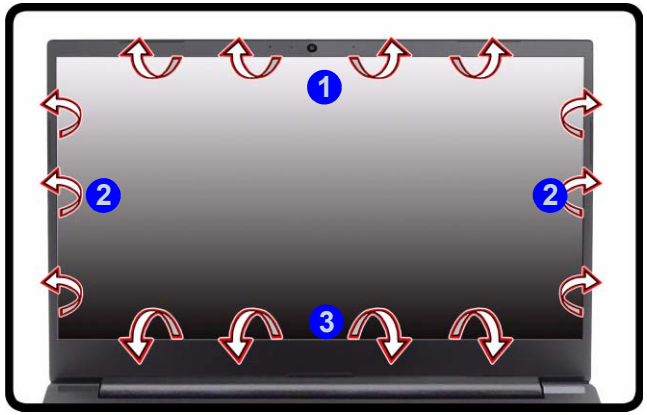

b.

5. LCD Front Cover

4. Disconnect the cable 6 (*Figure 9c*).
5. Remove the CCD module 7 (*Figure 9d*).
6. Reverse the process to install a new CCD module.

Figure 9
CCD Removal (cont'd.)

c. Disconnect the cable.
d. Remove the CCD module.

c.

d.

7. CCD Module

Appendix A: Part Lists

This appendix breaks down the ***NL40MU1 / NL41MU1 / NL40MU2 / NL41MU2*** series notebook's construction into a series of illustrations. The component part numbers are indicated in the tables opposite the drawings.

Note: This section indicates the *manufacturer's* part numbers. Your organization may use a different system, so be sure to cross-check any relevant documentation.

Note: Some assemblies may have parts in common (especially screws). However, the part lists DO NOT indicate the total number of duplicated parts used.

Note: Be sure to check any update notices. The parts shown in these illustrations are appropriate for the system at the time of publication. Over the product life, some parts may be improved or re-configured, resulting in *new* part numbers.

Part List Illustration Location

The following table indicates where to find the appropriate part list illustration.

Table A - 1
Part List Illustration Location

Part	
Top with FP	*page A - 3*
Top without FP	*page A - 4*
Bottom	*page A - 5*
LCD	*page A - 6*
MB	*page A - 7*

Top with FP

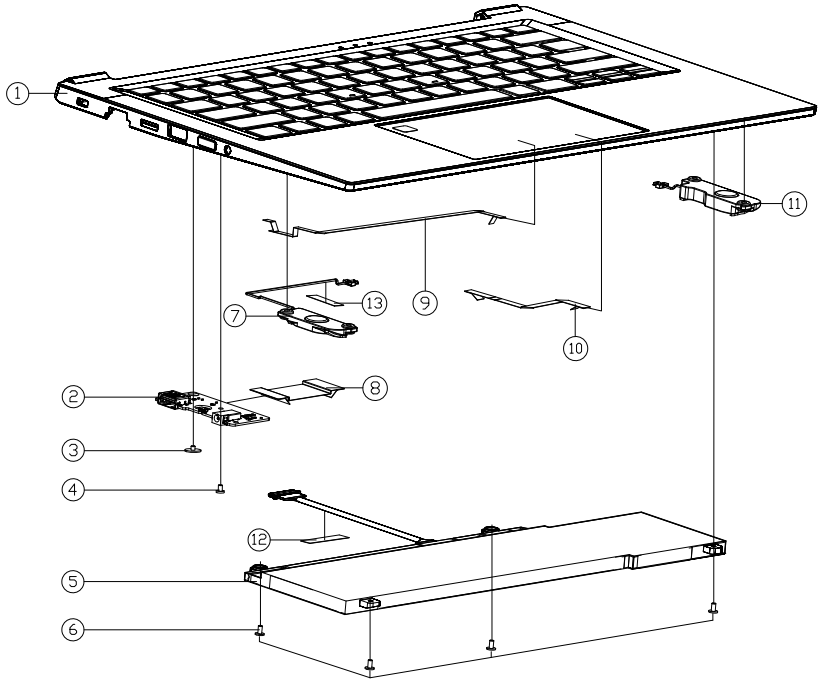

ITEM	PART NAME	PART NO	REMARK
1	KB FOR NON BL KB SERIES NL40MU1	6-NL40MU1-KB-NBL	
1	KB FOR WHITE BL KB SERIES NL40MU1	6-NL40MU1-KB-WBL	
1	POSITIVO (OPTION) BOM NL40MU1	6-NL40MU1-CUSTOM-POSITIVO	
1	KB FOR NON BL KB SERIES NL41MU1	6-NL41MU1-KB-NBL	
1	KB FOR WHITE BL KB SERIES NL41MU1	6-NL41MU1-KB-WBL	
1	KB FOR NON BL KB SERIES NL40MU2	6-NL40MU2-KB-NBL	
1	KB FOR WHITE BL KB SERIES NL40MU2	6-NL40MU2-KB-WBL	
1	KB FOR NON BL KB SERIES NL41MU2	6-NL41MU2-KB-NBL	
1	KB FOR WHITE BL KB SERIES NL41MU2	6-NL41MU2-KB-WBL	
2	I/O BOARD V1.0 NL40MU1	6-77-NL4M1-D01	
2	I/O BOARD (USB 3.1 GEN1+PHONE JACK) V3.0B NL40CU	6-77-NL4C1-D03B	
3	SCREW M2*2L KI BK/Z ICT NY(Ø8,T=0.6)	6-35-B6120-2RE	
4	SCREW M2*3L KI NI ICT NY (DD=Ø4.0,DT=0.8)	6-35-B1120-3RD	
5	BATP S LI 11.4V/323MH/36WH 3CIP SCDI/CEYEB B54K0259K001 C0T5MHD NL40CU	6-87-NL40S-33G21	
5	BATP S LI 11.4V/3.0T5MH/36WH PCE 3CIP GEIAC/VEKEN CPDLYKE254T5YB2K00 /C0T5MHD	6-87-NL4CS-32B01	
5	BATP S LI 15.2V/323MH/49WH 4CIP SCDI/CEYEB E54K0259K003E3T52MHD NL40CU,NEL40U CHANGE TO 49WH	6-87-NL4CS-43G01	
5	BATP S LI 15.2V/323MH/49WH 4CIP SMP/VEKEN 9B00A040K3075MHD NL40CU	6-87-NL4CS-41B01	
6	SCREW M2*4L KI NI ICT NY (DD=Ø4.5,DT=0.8)	6-35-B1120-4RC	
7	SPK+CABLE L L44*23 2W 4? L50MM VTS251410-03 NL50CU	6-23-5NL5C-0L0	
8	FFC ID TO MB (P=0.5) 51.0MM 60V 40PIN NL40CU	6-43-NL4C0-020-1	
9	FFC FP TO USB (P=0.5) 173.5MM 60V 6PIN NL40CU1	6-43-NL4C8-010-1	
10	FFC CLICK TO MB (P=0.5) 86.0MM 60V 8PIN NL40CU1	6-43-NL4C8-020-1	
11	SPK+CABLE R L44*23 2W 4? L50MM VTS251410-04 NL50CU	6-23-5NL5C-0R0	
12	TAPE MYLAR (C),MYLAR M550J	6-40-M55J2-030	
13	TAPE MYLAR TRANSPARENT (20*10*0.05) P180HM	6-40-P1803-020	

Figure A - 1
Top with FP

Top without FP

Figure A - 2
Top without FP

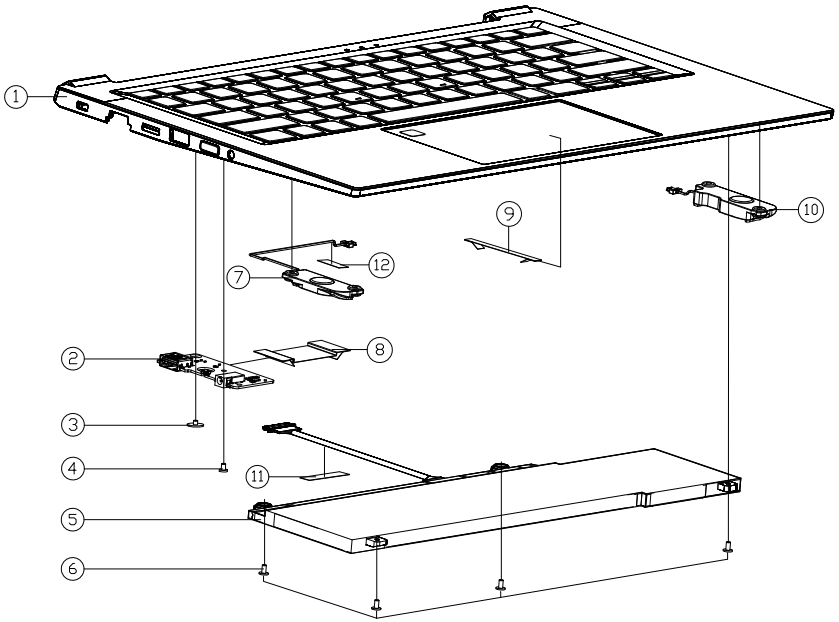

ITEM	PART NAME	PART NO	REMARK
1	KB FOR NON BL KB SERIES NL40MU1	6-NL40MU1-KB-NBL	
1	KB FOR WHITE BL KB SERIES NL40MU1	6-NL40MU1-KB-WBL	
1	POSITIVO (OPTION) BOM NL40MU1	6-NL40MU1-CUSTOM-POSITIVO	
1	KB FOR NON BL KB SERIES NL41MU1	6-NL41MU1-KB-NBL	
1	KB FOR WHITE BL KB SERIES NL41MU1	6-NL41MU1-KB-WBL	
1	KB FOR NON BL KB SERIES NL40MU2	6-NL40MU2-KB-NBL	
1	KB FOR WHITE BL KB SERIES NL40MU2	6-NL40MU2-KB-WBL	
1	KB FOR NON BL KB SERIES NL41MU2	6-NL41MU2-KB-NBL	
1	KB FOR WHITE BL KB SERIES NL41MU2	6-NL41MU2-KB-WBL	
2	I/O BOARD V1.0 NL40MU1	6-77-NL4M1-D01	
2	I/O BOARD (USB 3.1 GEN1+PHONE JACK) V3.0B NL40CU	6-77-NL4C1-D03B	
3	SCREW M2*2L KI BK/Z ICT NY(Ø8,T=0.6)	6-35-B6120-2RE	
4	SCREW M2*3L KI NI ICT NY (DD=Ø4.0,DT=0.8)	6-35-B1120-3RD	
5	MTP S LI 11.4V/2.23W/26W/36W 20P SOLD/EXTED R5M0239001 C0.75MM NL40CU	6-87-NL40S-33G21	
5	MTP S LI 11.4V/3.15W/36W/56W P2E 32P GETAC/VEKEN OPEL/MEDIA5429200001 /C0.75MM	6-87-NL4CS-32B01	
5	MTP S LI 15.2V/2.23W/49W 42P SOLD/EXTED R5M0239002/R5F7MM NL40CU/ABEL-NW CHANGE TO 49W	6-87-NL4CS-43G01	
5	MTP S LI 15.2V/3.23W/49W 41P SMP/VEKEN 9980A0449K30.75MM NL40CU	6-87-NL4CS-41B01	
6	SCREW M2*4L KI NI ICT NY (DD=Ø4.5,DT=0.8)	6-35-B1120-4RC	
7	SPK+CABLE L L44*23 2W 4? L150MM VTS251410-03 NL50CU	6-23-5NL5C-0L0	
8	FFC ID TO MB (P=0.5) 51.0MM 60V 40PIN NL40CU	6-43-NL4C0-020-1	
9	FFC CLICK TO MB (P=0.5) 49.0MM 60V 8PIN NL40CU	6-43-NL4C0-011-1	
10	SPK+CABLE R L44*23 2W 4? L50MM VTS251410-04 NL50CU	6-23-5NL5C-0R0	
11	TAPE MYLAR (C),MYLAR M550J	6-40-M55J2-030	
12	TAPE MYLAR TRANSPARENT (20*10*0.05) P180HM	6-40-P1803-020	

Bottom

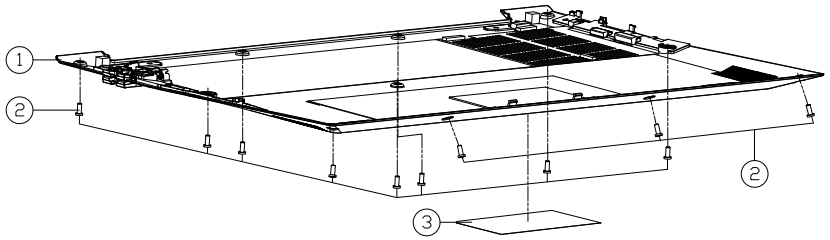

ITEM	PART NAME	PART NO	REMARK
1	BOTTOM CASE MODULE NL40CU	6-39-NL4C3-017	
2	SCREW M2*5L KICT=0.8 D=3.5) BK/Z ICT NY	6-35-B6120-5RC	
3	PRODUCT LABAL FOR NL40MU1	6-45-NL40MU13-010	
3	PRODUACT LABAL FOR NL40MU2	6-45-NL40MU23-010	
3	PRODUCT LABEL FOR NL41MU1	6-45-NL41MU13-010	
3	PRODUCT LABAL FOR NL41MU2	6-45-NL41MU23-010	

Figure A - 3
Bottom

LCD

Figure A - 4
LCD

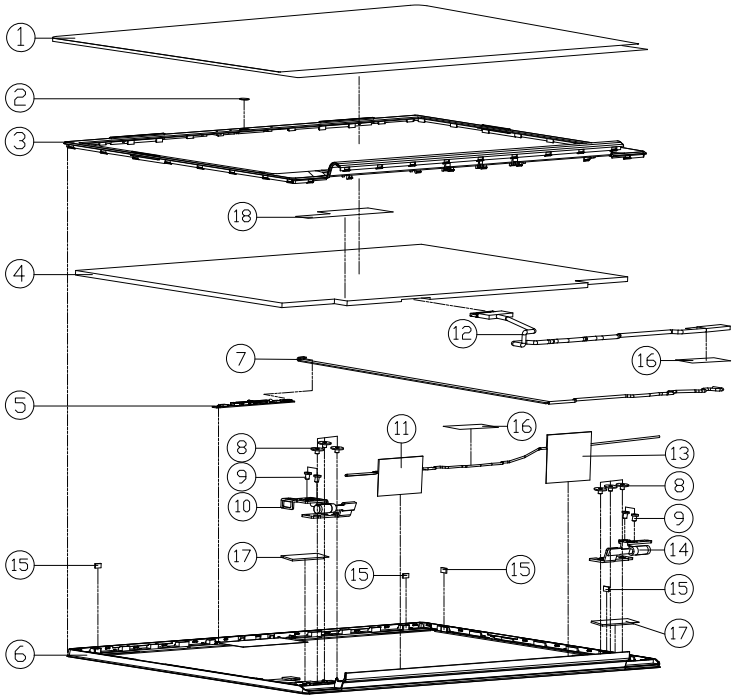

ITEM	PART NAME	PART NO	REMARK
1	LCD PROTECT MYLAR BOPP N130BU	6-40-N1308-011	
2	CCD LENS PMMA (DIAMETER 3.6MM) (MP1) P970EN	6-42-P97N1-011-1	
3	FRONT COVER MODULE NL40GU	6-39-NL401-014	
4	LCD N14.0" FHD/WVA/N4/NON GT/EDP AU B140HAN04.0 LED 3.0MM	6-50-JBB30-G010	
4	LCD N14.0" FHD/NON GT/EDP BOE NT140FHM-N44 LED 3.0MM	6-50-JBB30-Z001	
4	LCD N14.0" HD/NON GT/EDP SHARP LQ140T1JH01 3.0MM	6-50-J8B30-A000	
4	LCD N14.0" FHD/WVA/N4/NON GT/EDP LG LP140WFH-SPD1 3.0MM	6-50-JBB30-L013	
5	UVC CAMERA BOXIN FINGER: IMAGEVIEW-BIO IN HD DV5724 NCSB20 FA828 WHITE-LED W/CB-RECOMMEND BORDER WITH FFCD	6-88-N15ZC-4900	OPTION
5	UVC CAMERA CHICONY FINGER:CD CX11622ZB0ZE50LB IN HD W/CB-NOC 4.0V0.7Z DV5724 NCSB20 FA2728 WHITE-LED	6-88-N15ZC-5102	OPTION
6	BACK COVER MODULE NL40GU	6-39-NL401-022	
6	BACK COVER MODULE NL41CU	6-39-NL411-021	
7	WIRE+FFC CABLE FOR CCD(NEW UPDATE) 400MM 12P TO 8P 3.3V (JS) L140CU	6-43-L140T-021-1	
8	SCREW M2.5*2.5L KI BK/Z ICT NY(Ø8,T=0.6)	6-35-B6125-2R5	
9	.SCREW M2.5*5L KI BK/Z ICT NY	6-35-B6125-5RA	
10	HINGE L (SK7) NL40CU1	6-33-NL4C1-0L0	
11	ANTENNA IPEX4 WLAN JEM WL2 PCB DR 40X9MM 2.4G/5G L= 550MM NL50CU	6-23-7NL5C-021	
12	WIRE CABLE FOR EDP FHD 280MM (D) 19V 30PIN (CNLS/L.V CONN.VC030-2121) NL50CU	6-43-NJ501-011-1N	
13	ANTENNA IPEX4 WLAN JEM WL1 PCB DR 40X9MM 2.4G/5G L= 350MM NL50CU	6-23-7NL5C-011	
14	HINGE R (SK7) NL40CU1	6-33-NL4C1-0R0	
15	LCD RUBBER (4.8*3*0.9) NL50GU	6-47-NL501-010	
16	TAPE MYLAR TRANSPARENT (20*10*0.05) P180HM	6-40-P1803-020	
17	LALATAPE PANEL 3.2 NK50SB	6-47-NK501-071	
18	CONDUCTIVE CLOTH(銀色)+110*18*0.1T NL40ZU	6-47-NL402-0B0	ONLY FOR 6-50-JBB30-Z001

MB

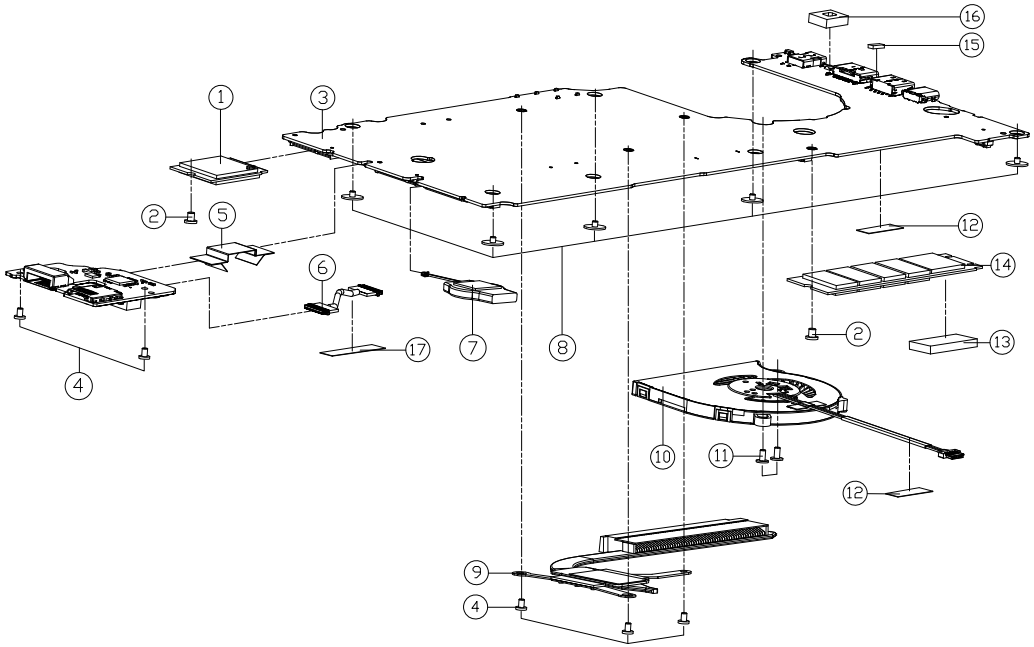

ITEM	PART NAME	PART NO	REMARK
1	[illegible]	6-88-N24GF-4200	OPTION
1	[illegible]	6-88-N24GF-4220	OPTION
1	[illegible]	6-88-N15CF-4210	OPTION
1	[illegible]	6-88-NV40F-4210	OPTION
1	[illegible]	6-88-X17KF-4210	OPTION
1	[illegible]	6-88-NL5RF-7000	OPTION
2	SCREW M2*2L KI NI ICT NY (DD=#5 ,T=0.8)	6-35-B1120-2RA	
3	[illegible]	6-77-NL40MU1A-N02-A	
3	[illegible]	6-77-NL40MU1A-N02-F	
3	[illegible]	6-77-NL40MU1A-N02-G	
3	[illegible]	6-77-NL40MU1A-N02-4B	
3	[illegible]	6-77-NL40MU1A-N02-5C	
3	[illegible]	6-77-NL40MU1A-N02-6B	
3	[illegible]	6-77-NL40MU1A-N02-7E	
4	SCREW M2*3L KI NI ICT NY (DD=#4.0,DT=0.8)	6-35-B1120-3RD	
5	FFC RJ TO MB (P=0.5) 48.5MM 60V 22PIN NL40CU	6-43-NL4C0-030-1	
6	WIRE CABLE FOR MB TO LAN BOARD 90MM 5P 3.3V (CM) NL5MU	6-43-NL5M0-020	
7	BAT. 20MM 3V 220MAH W/CABLE 55MM BCR2032H5	6-23-22015-TE0	
8	SCREW M2*2L KI BK/Z ICT NY(#8,T=0.6)	6-35-B6120-2RE	
9	CPU HEATSINK MODULE NL40LU1	6-31-NL4LN-101	
10	FAN MODULE (WINMA) PWM N141WU	6-31-N14WS-102-1	
11	SCREW M2*4L KI NI ICT NY (DD=#4.5,DT=0.8)	6-35-B1120-4RC	
12	TAPE MYLAR TRANSPARENT (20*10*0.05) P180HM	6-40-P1803-020	
13	THERMAL PAD FOR M2 SSD TFLEX035 30MM*20MM NL40CU	6-48-NL4CS-010	
14	SSD M2 2280 1TB SAMSUNG MZVL41T0HBLR-00000 (PM9A1) PCIE Gen4 3D TLC % LAYERS	6-85-D511T-S04	OPTION
14	SSD M2 2280 1TB WD SDBPNPZ-1T00 (SN730) PCIE Gen4 3D TLC % LAYERS	6-85-D511T-W01	OPTION
14	SSD PCIE Gen4 M2 2280 1TB PHISON (ESMINI)(M2-E16) (E16)(BiCS5) (QLC)(3D) 3D TLC % LAYERS	6-85-D511T-H01	OPTION
14	SSD M2 2280 512GB SAMSUNG MZVL8512HBLU-00000 (PM991A) PCIE Gen4 3D TLC % LAYERS	6-85-D515B-S0A	OPTION
14	SSD M2 2280 512GB KIOXIA (THERSONIC)-52 (NS2N3) PCIE Gen4 (KIOXIA)(BiCS5) 3D TLC % LAYERS	6-85-D515B-B01	OPTION
14	SSD M2 2280 256GB WD SDBPNPZ-256G (SN730) PCIE Gen4 3D TLC % LAYERS	6-85-D51R6-W02	OPTION
15	LCD RUBBER SILICONE 7*3*2.15MM U P950EN	6-47-P95N1-031	
16	SPENGE(D1*9.5*1.6SHD FOR DC LENS DS-15 NL40GU	6-47-0019A-A14	
17	TAPE MYLAR (C),MYLAR M550J	6-40-M55J2-030	

Figure A - 5
MB

Appendix B: Schematic Diagrams

This appendix has circuit diagrams of the ***NL40MU1 / NL41MU1 / NL40MU2 / NL41MU2*** notebook's PCB's. The following table indicates where to find the appropriate schematic diagram.

Diagram - Page	Diagram - Page	Diagram - Page
System Block Diagram - Page B - 2	*Panel - Page B - 18*	*2.5V, VCCST, VCCSTG - Page B - 34*
Processor 1/12 - Page B - 3	*USB Type-C ANX7443 - Page B - 19*	*Power PD Function - Page B - 35*
Processor 2/12 - Page B - 4	*ANX7411, Type-C - Page B - 20*	*NCP81269 - Page B - 36*
Processor 3/12 - Page B - 5	*ASM1543 - Page B - 21*	*3.3V, 5V, 3VS, 5VS, CTL - Page B - 37*
Processor 4/12 - Page B - 6	*LED KB, LED - Page B - 22*	*Charger, AC IN - Page B - 38*
Processor 5/12 - Page B - 7	*SATA HDD, TPM - Page B - 23*	*VCCIN - Page B - 39*
Processor 6/12 - Page B - 8	*Audio Codec - Page B - 24*	*RTL8411B - Page B - 40*
Processor 7/12 - Page B - 9	*KBC ITE IT5570 - Page B - 25*	*Multi Board RTS5227S / OZ711 - Page B - 41*
Processor 8/12 - Page B - 10	*WLAN - Page B - 26*	*LAN Transformer - Page B - 42*
Processor 9/12 - Page B - 11	*M Key PCIE SSD - Page B - 27*	*LAN Board Connector - Page B - 43*
Processor 10/12 - Page B - 12	*3G/LTE - Page B - 28*	*14" I/O Board - Page B - 44*
Processor 11/12 - Page B - 13	*USB Type-A - Page B - 29*	*15" I/O Board 1 - Page B - 45*
Processor 12/12 - Page B - 14	*Conn, CCD, Fan, TP - Page B - 30*	*15" I/O Board 2 - Page B - 46*
DDR4 SO-DIMM_A - Page B - 15	*VDD3, VDD5 - Page B - 31*	*PWR Button Board - Page B - 47*
DDR4 SO-DIMM_B - Page B - 16	*VDDQ, VDDQ_VTT, 1.8VA - Page B - 32*	*Power Sequence - Page B - 48*
HDMI - Page B - 17	*3.3VA, 1.8V - Page B - 33*	

Table B - 1
SCHEMATIC DIAGRAMS

Version Note

The schematic diagrams in this chapter are based upon version 6-7P-NL4M5-002. If your mainboard (or other boards) are a later version, please check with the Service Center for updated diagrams (if required).

System Block Diagram

Sheet 1 of 47
System Block Diagram

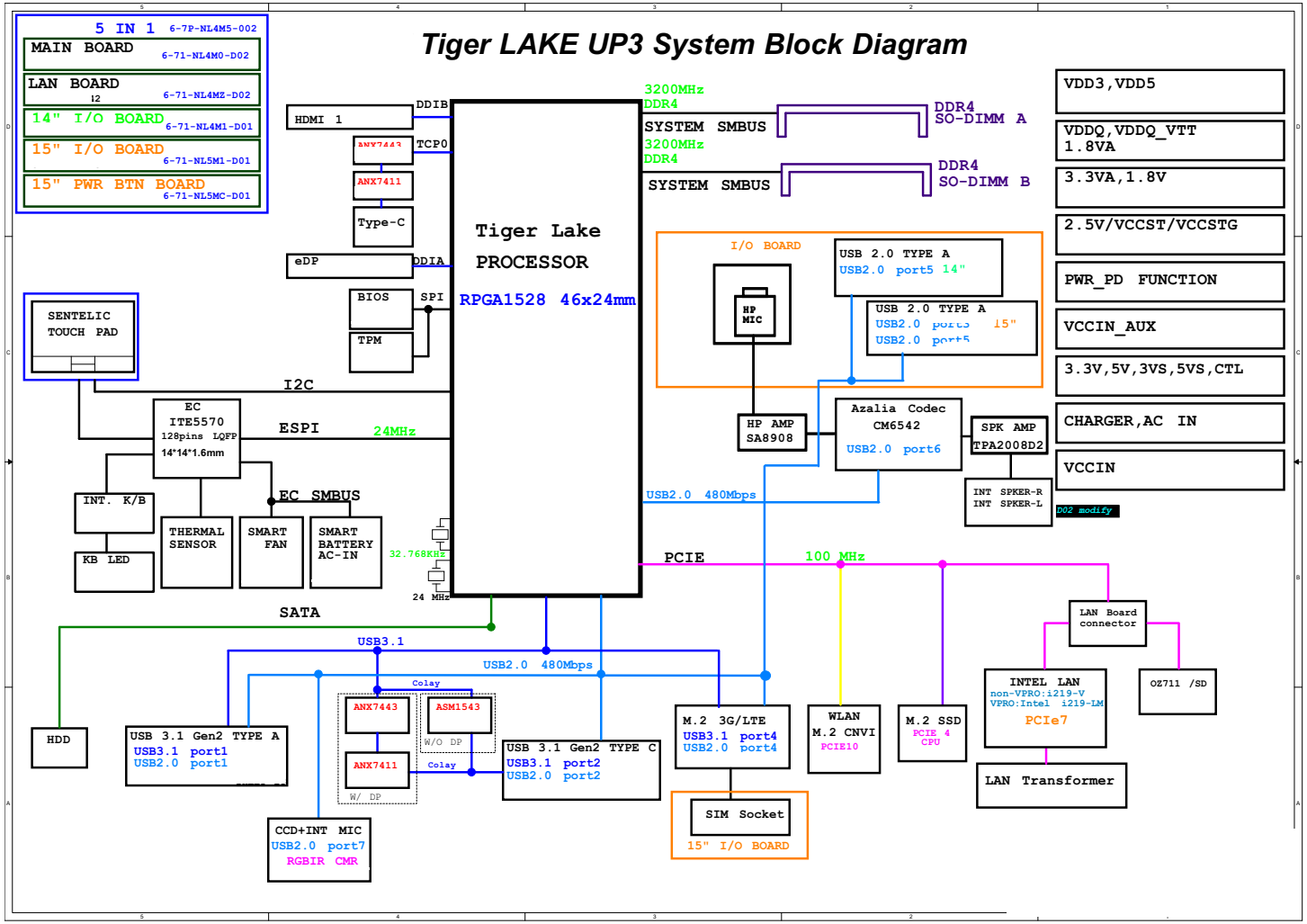

Processor 1/12

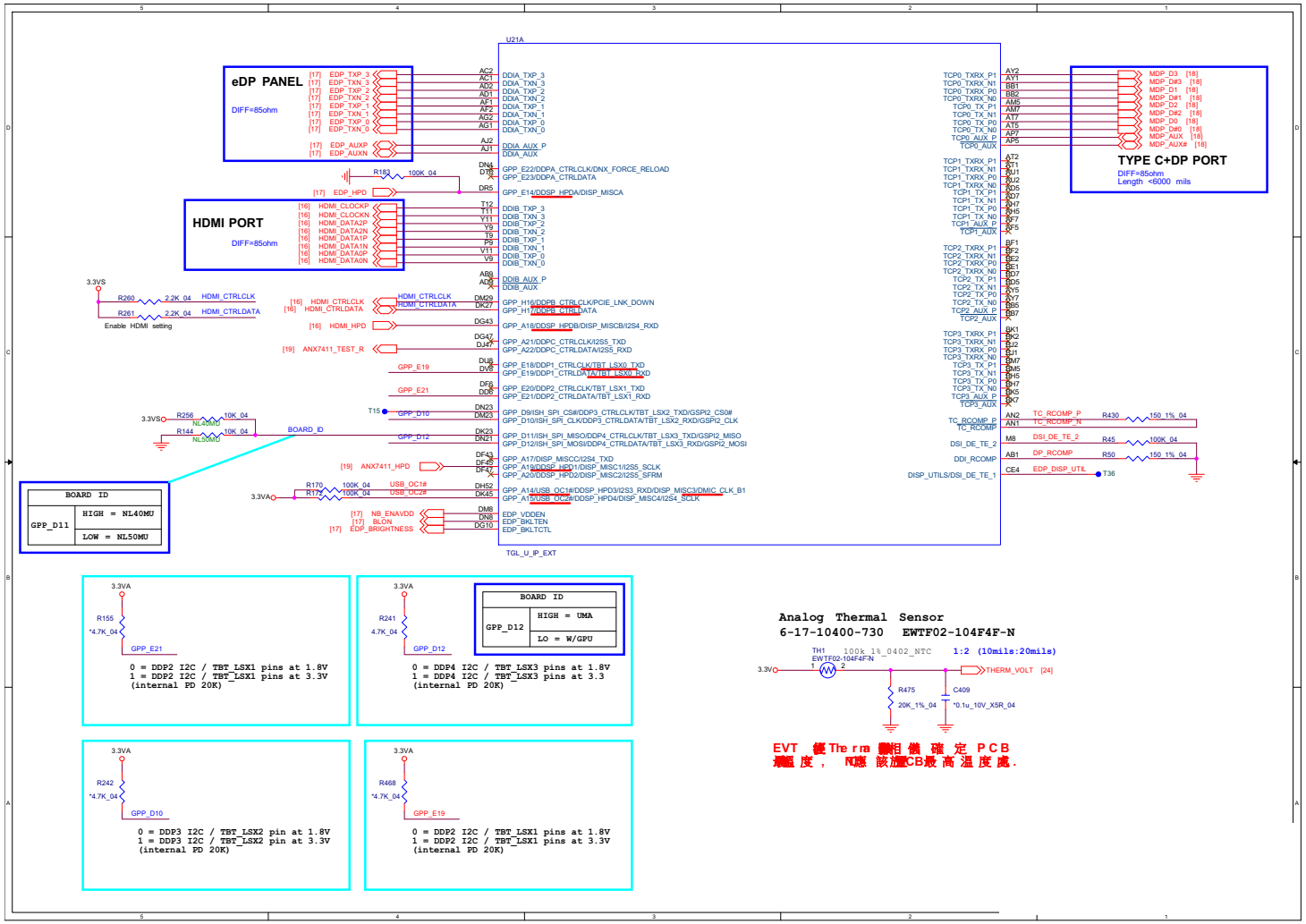

Sheet 2 of 47
Processor 1/12

Processor 2/12

Sheet 3 of 47
Processor 2/12

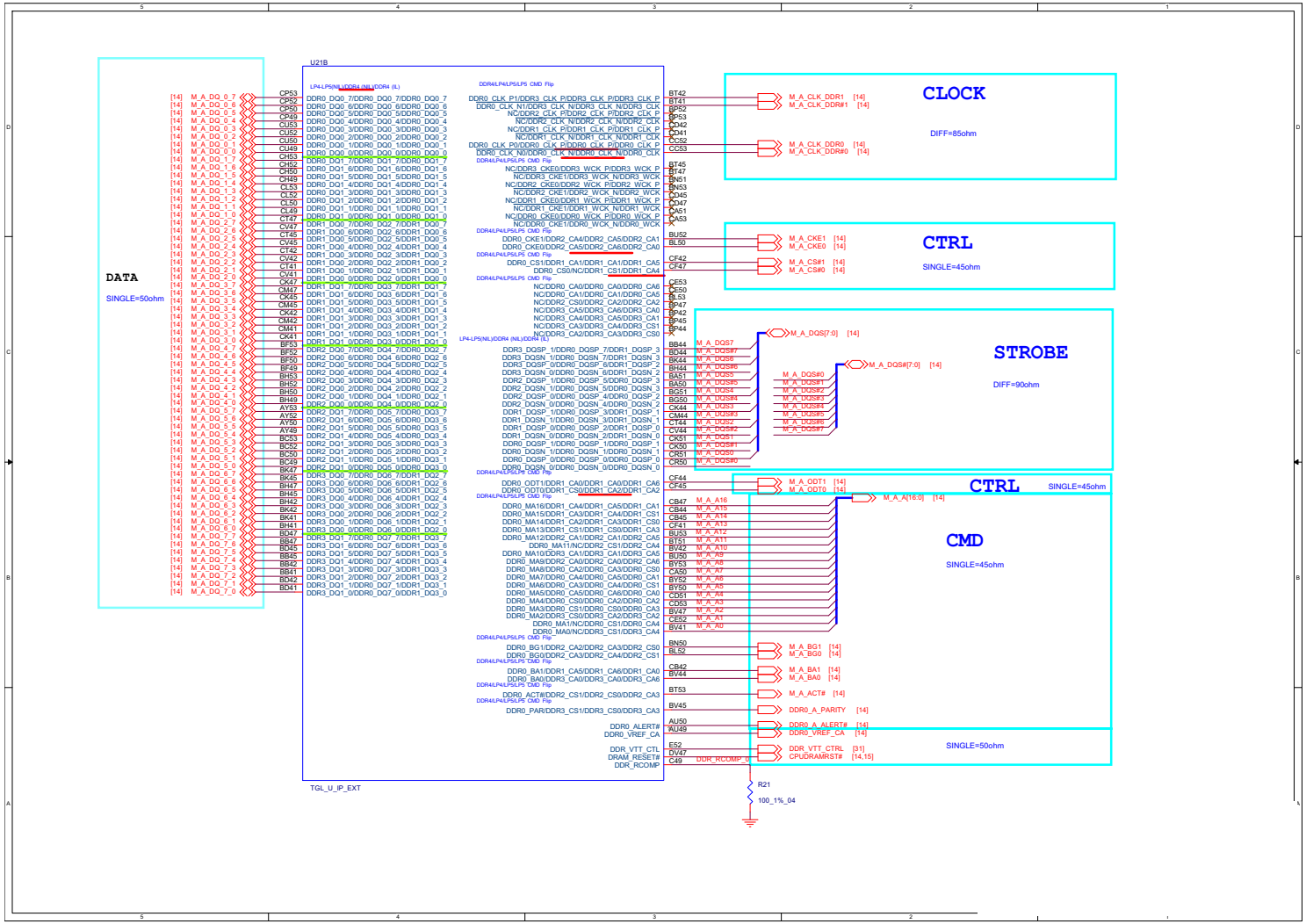

Processor 3/12

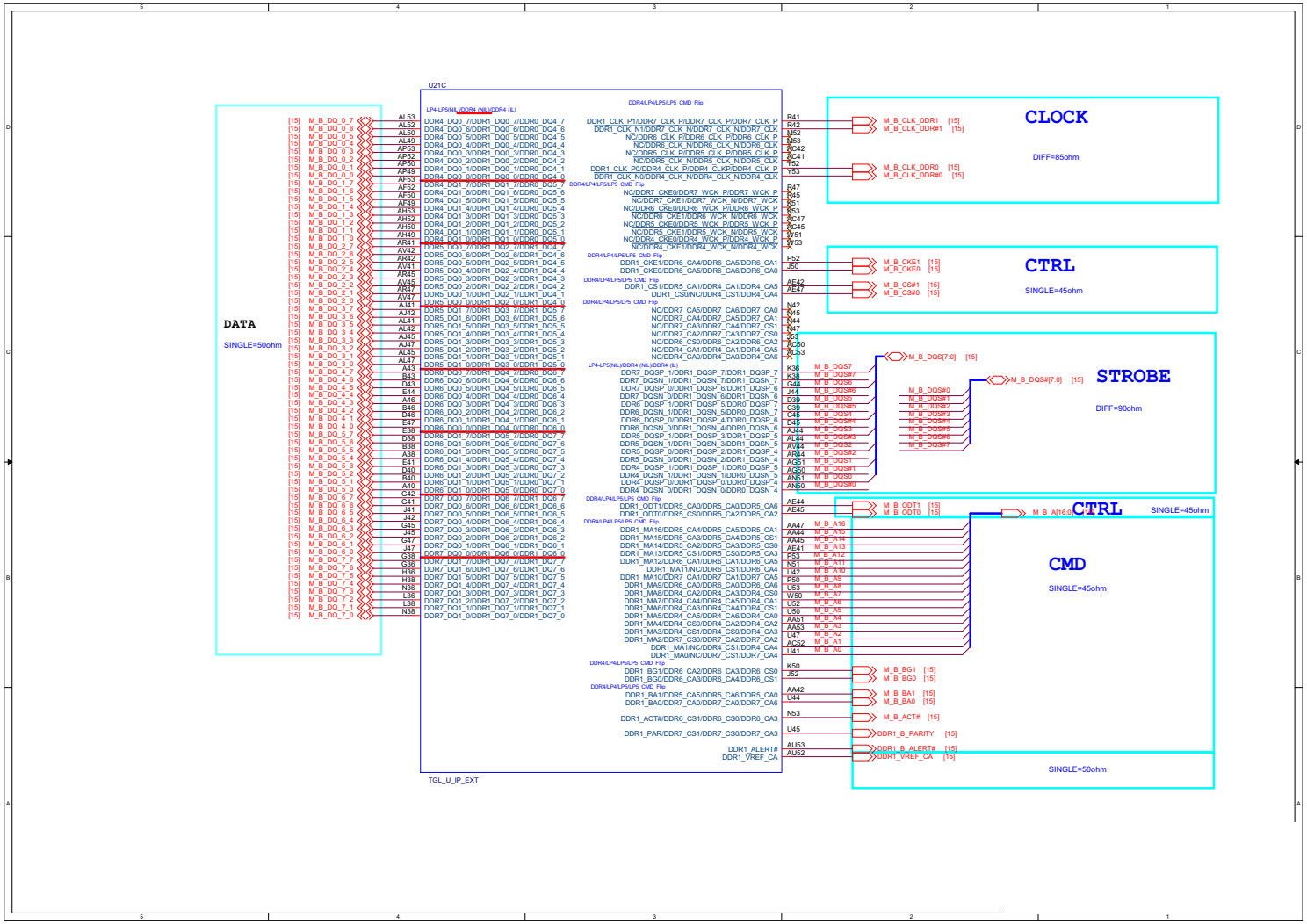

Sheet 4 of 47
Processor 3/12

Processor 4/12

Sheet 5 of 47
Processor 4/12

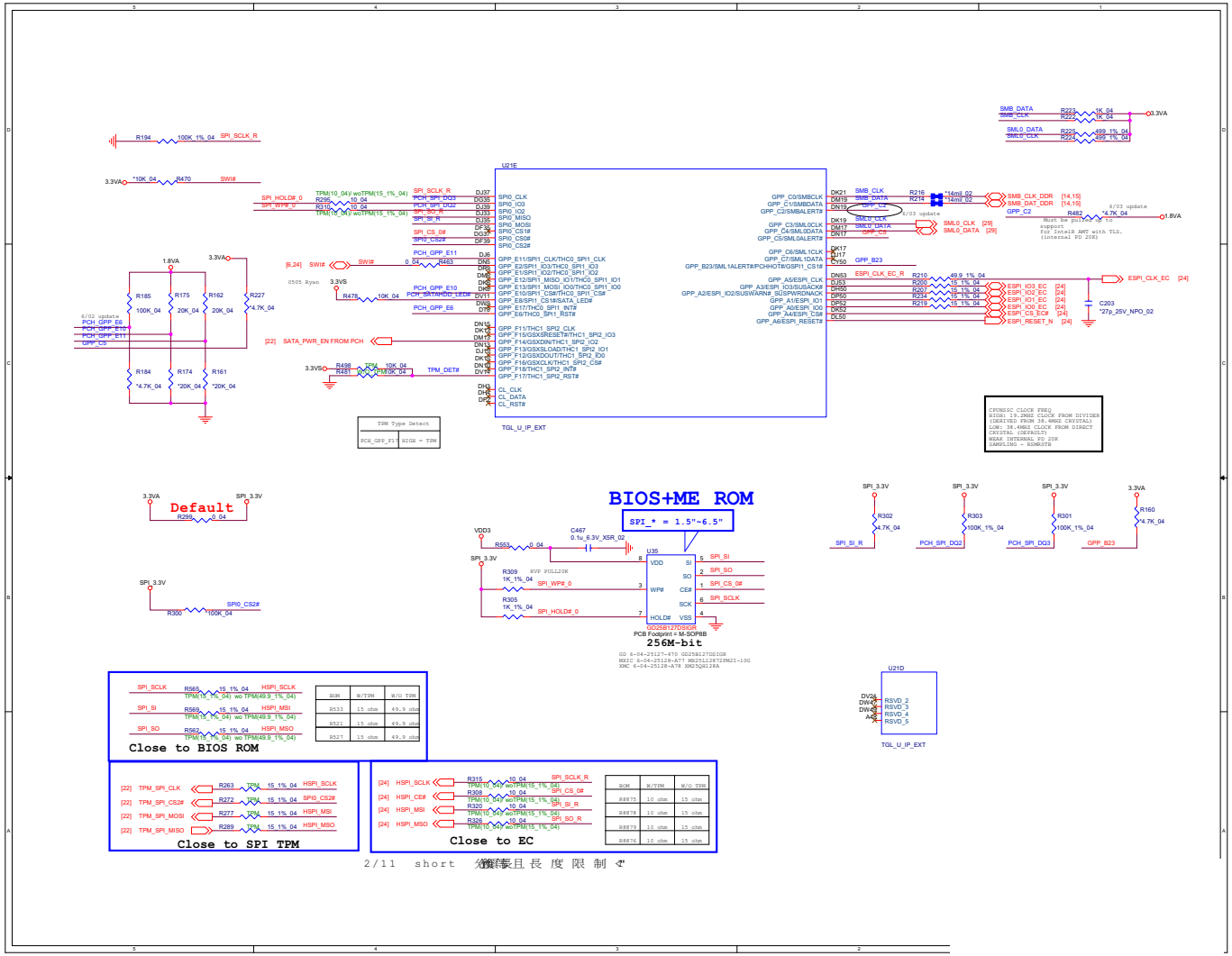

Processor 5/12

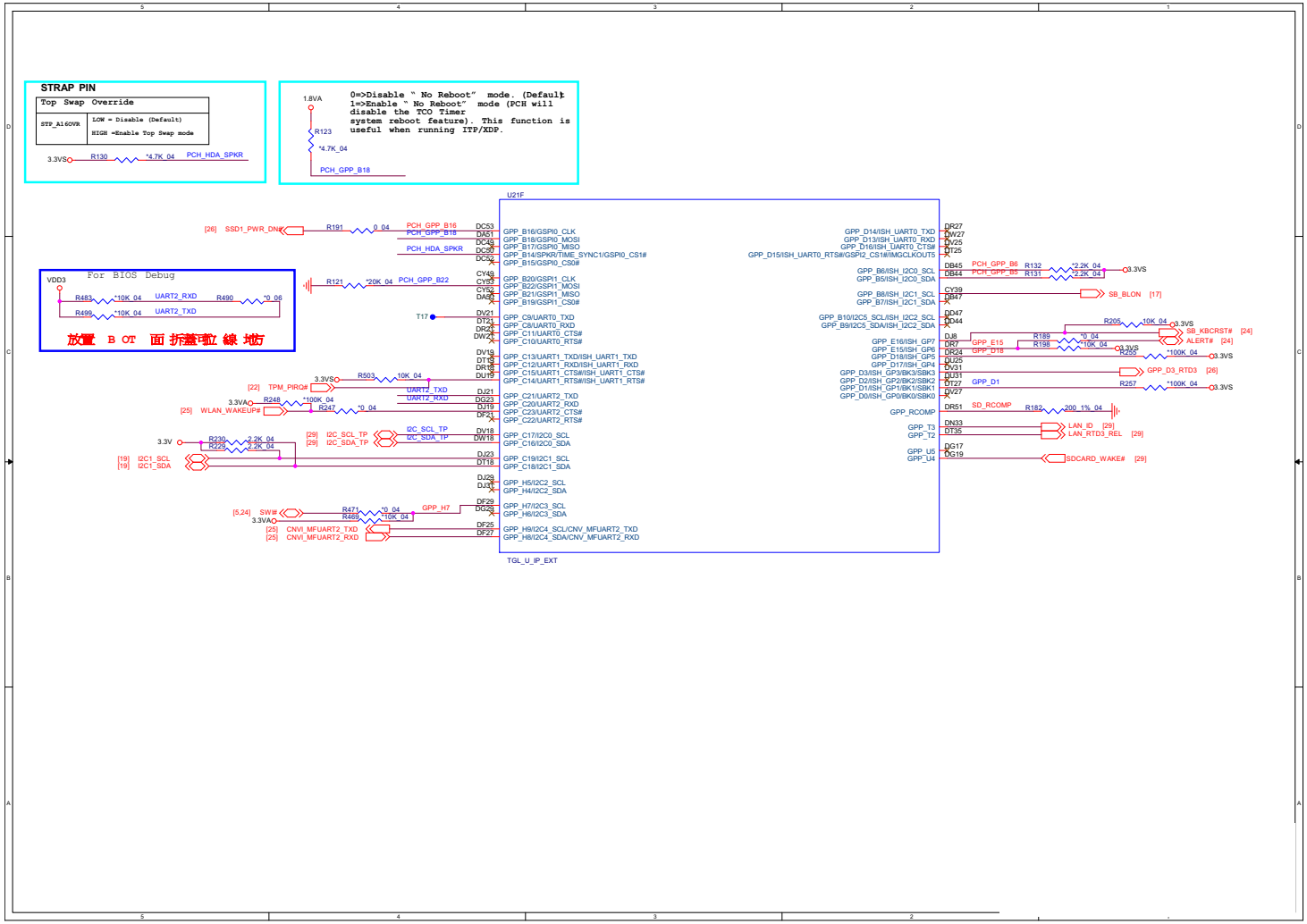

Sheet 6 of 47
Processor 5/12

Processor 6/12

Sheet 7 of 47
Processor 6/12

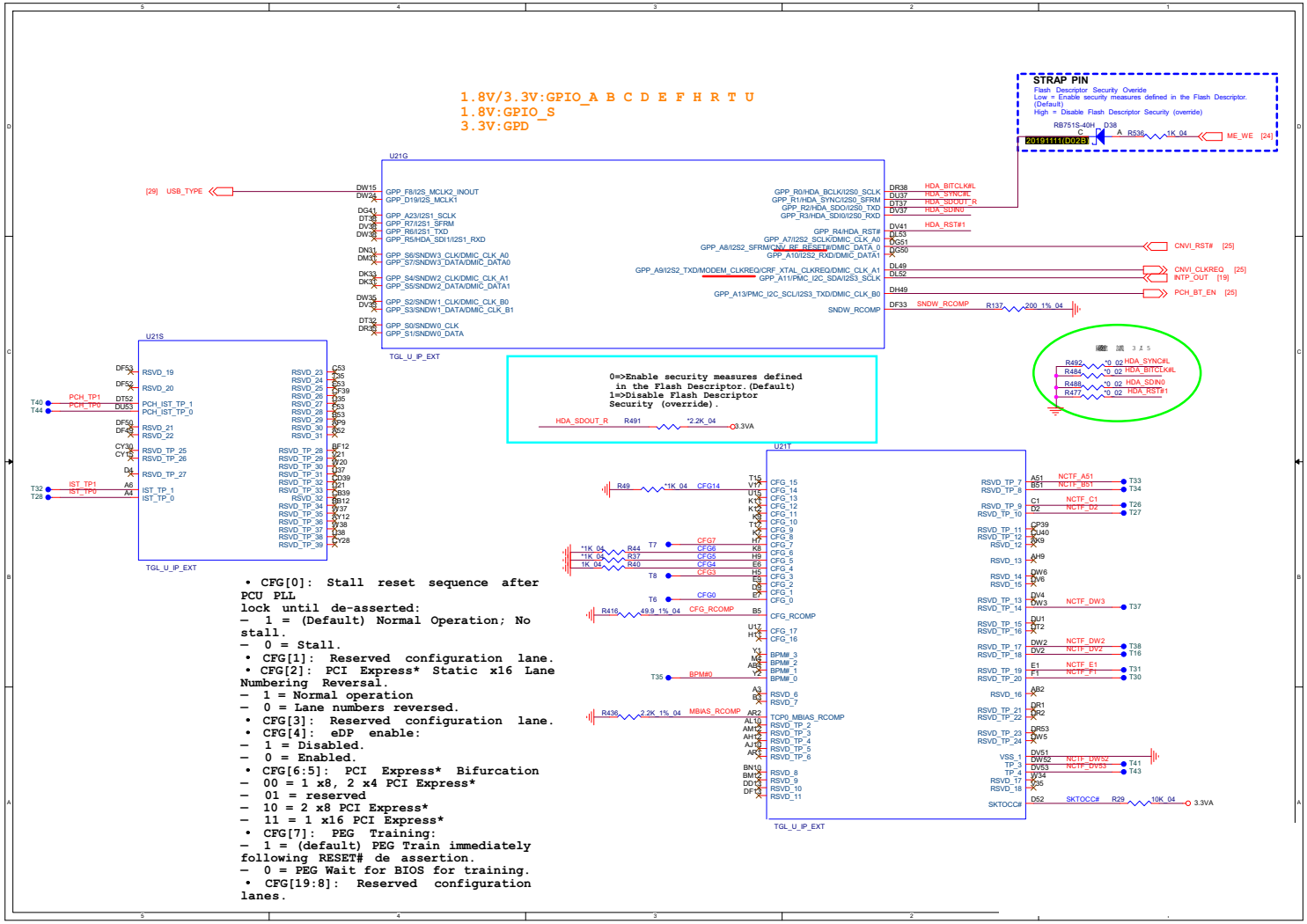

Processor 7/12

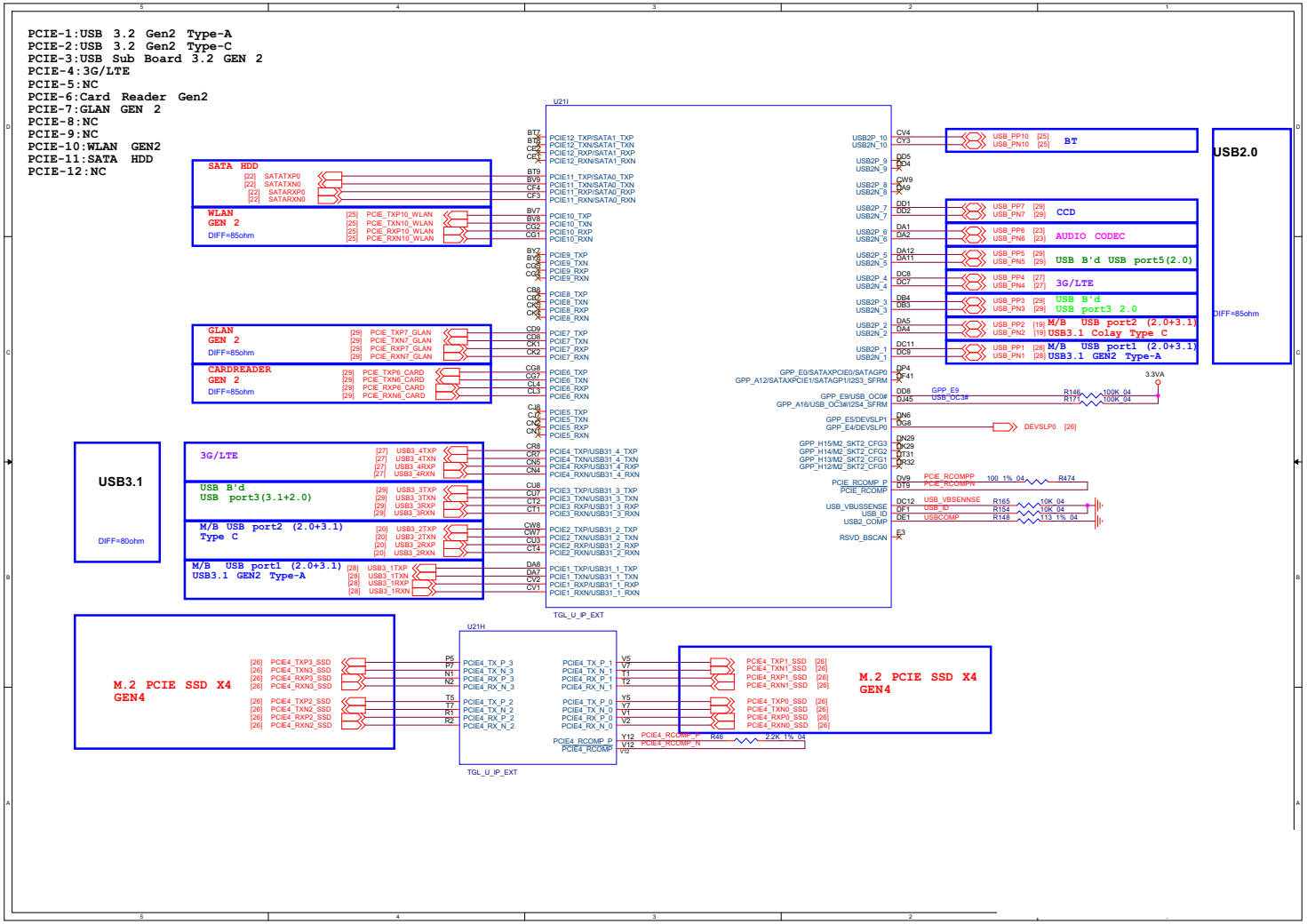

Sheet 8 of 47
Processor 7/12

Processor 8/12

Sheet 9 of 47
Processor 8/12

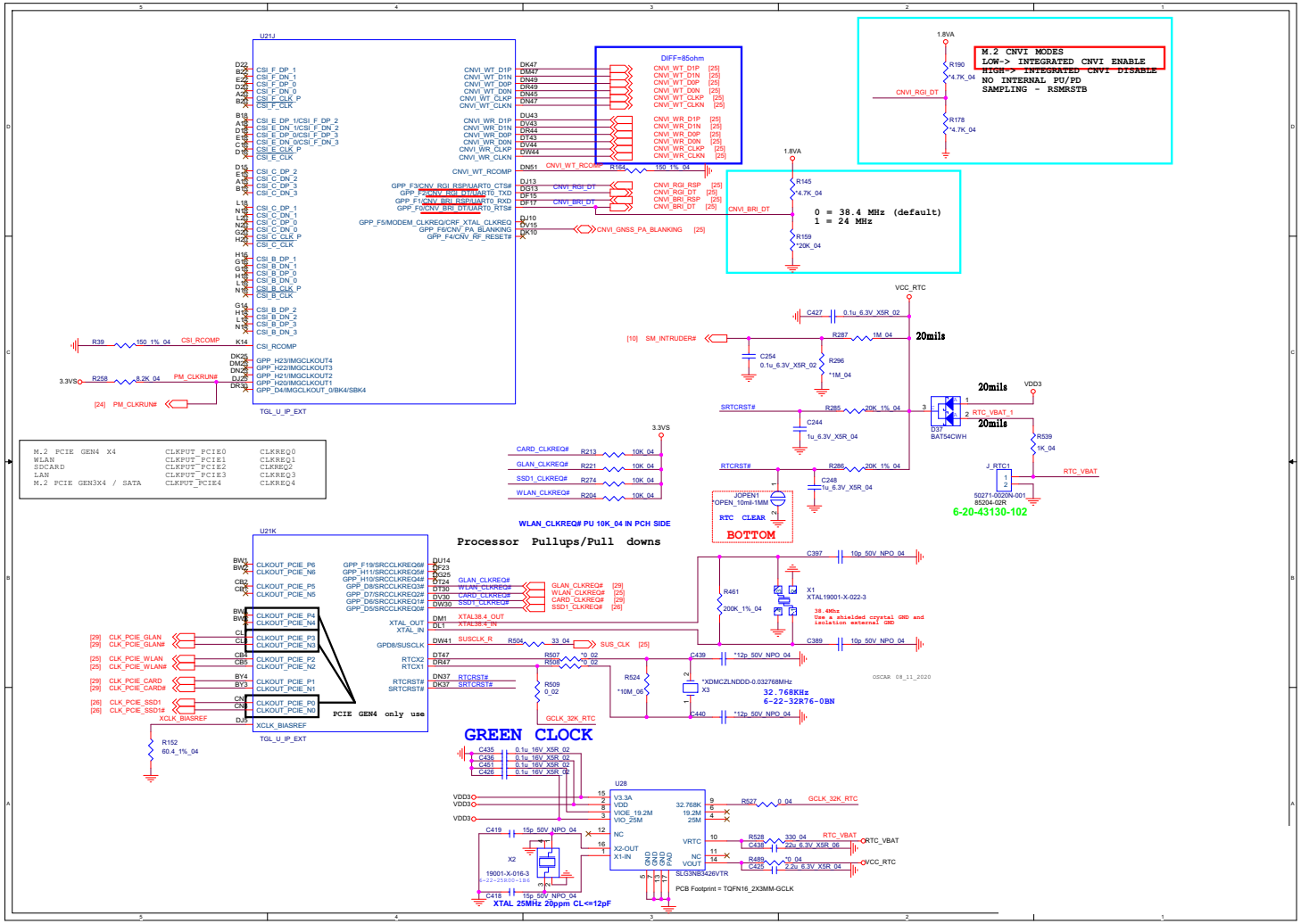

Processor 9/12

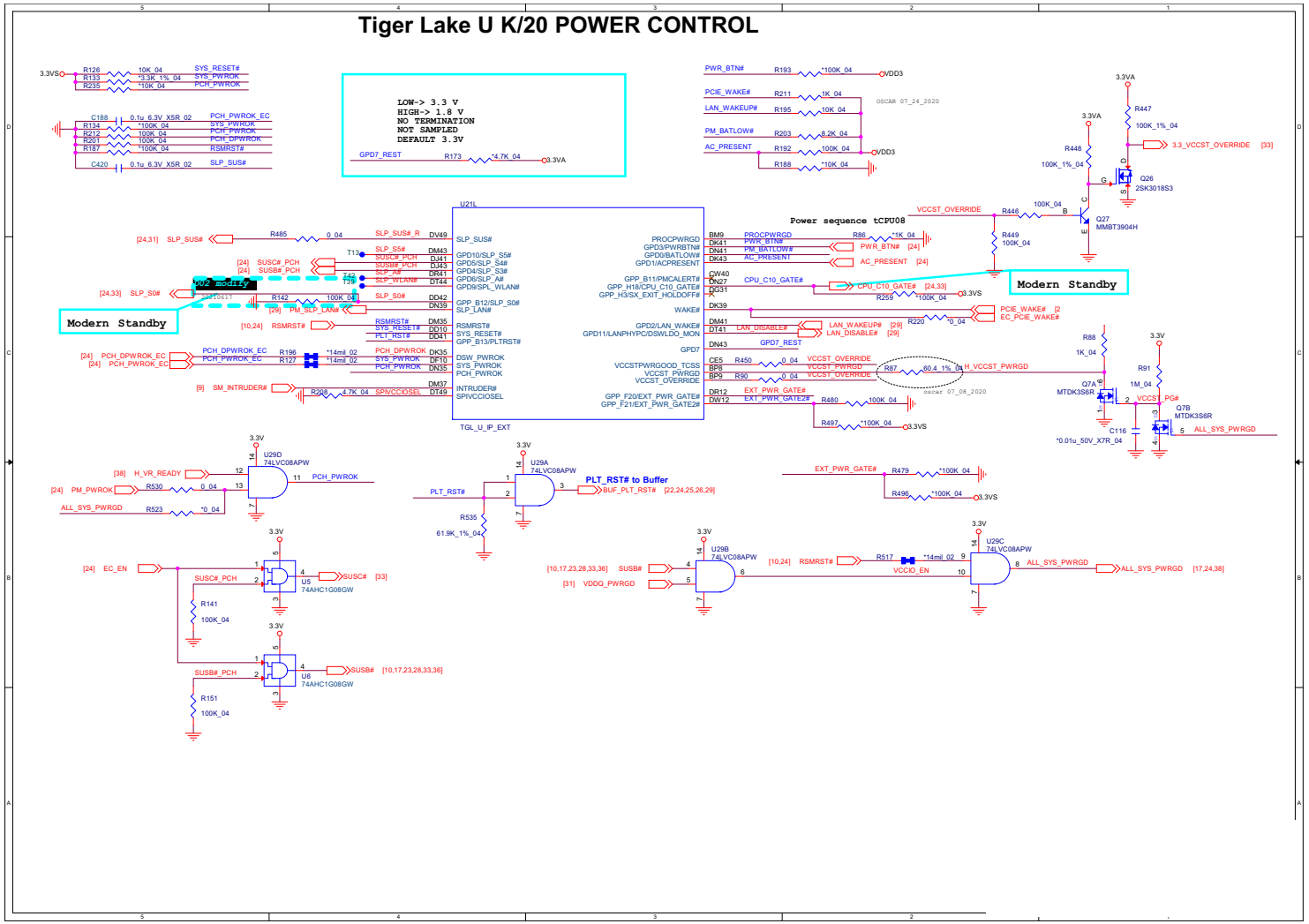

Sheet 10 of 47
Processor 9/12

Processor 10/12

Sheet 11 of 47
Processor 10/12

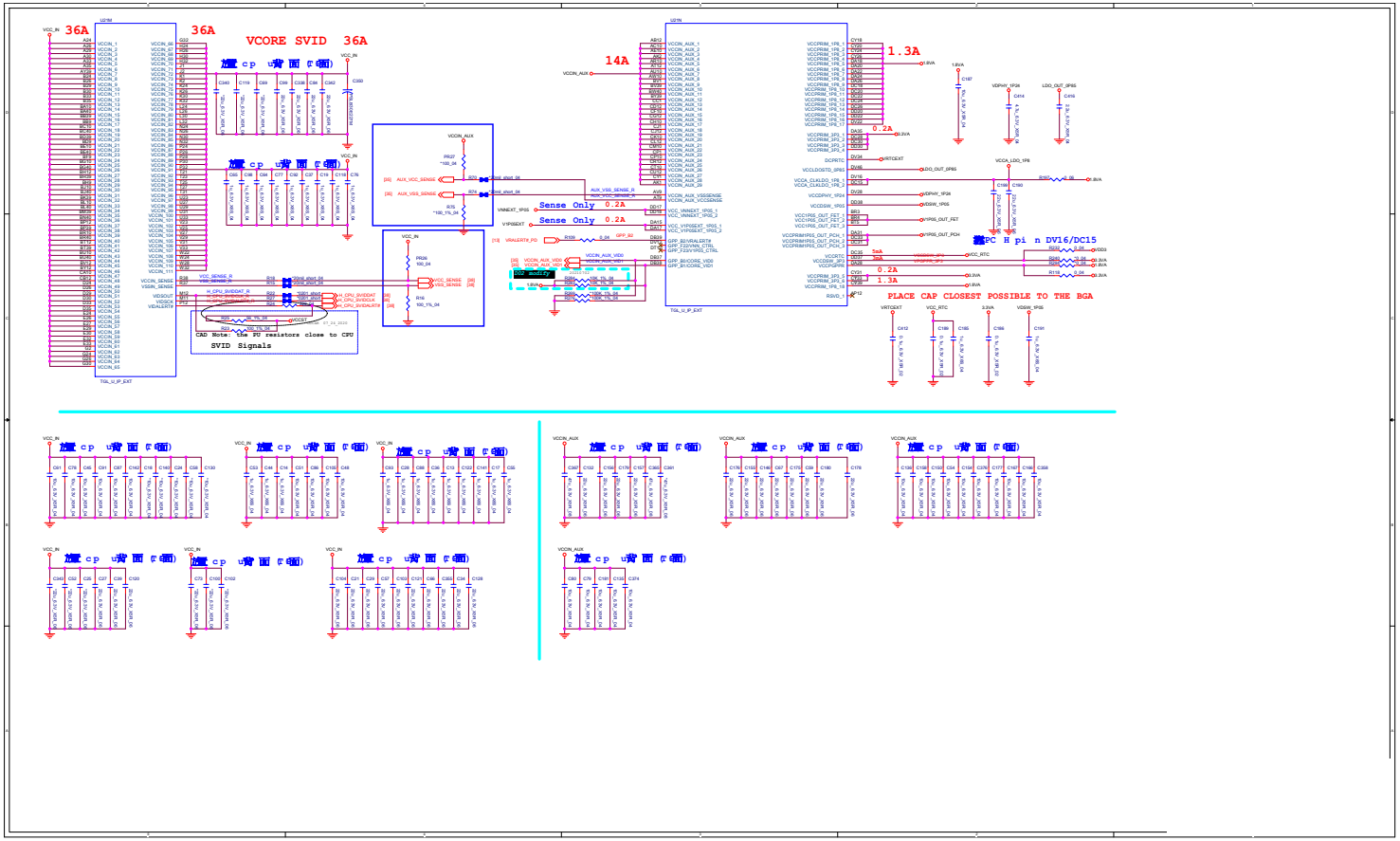

Processor 11/12

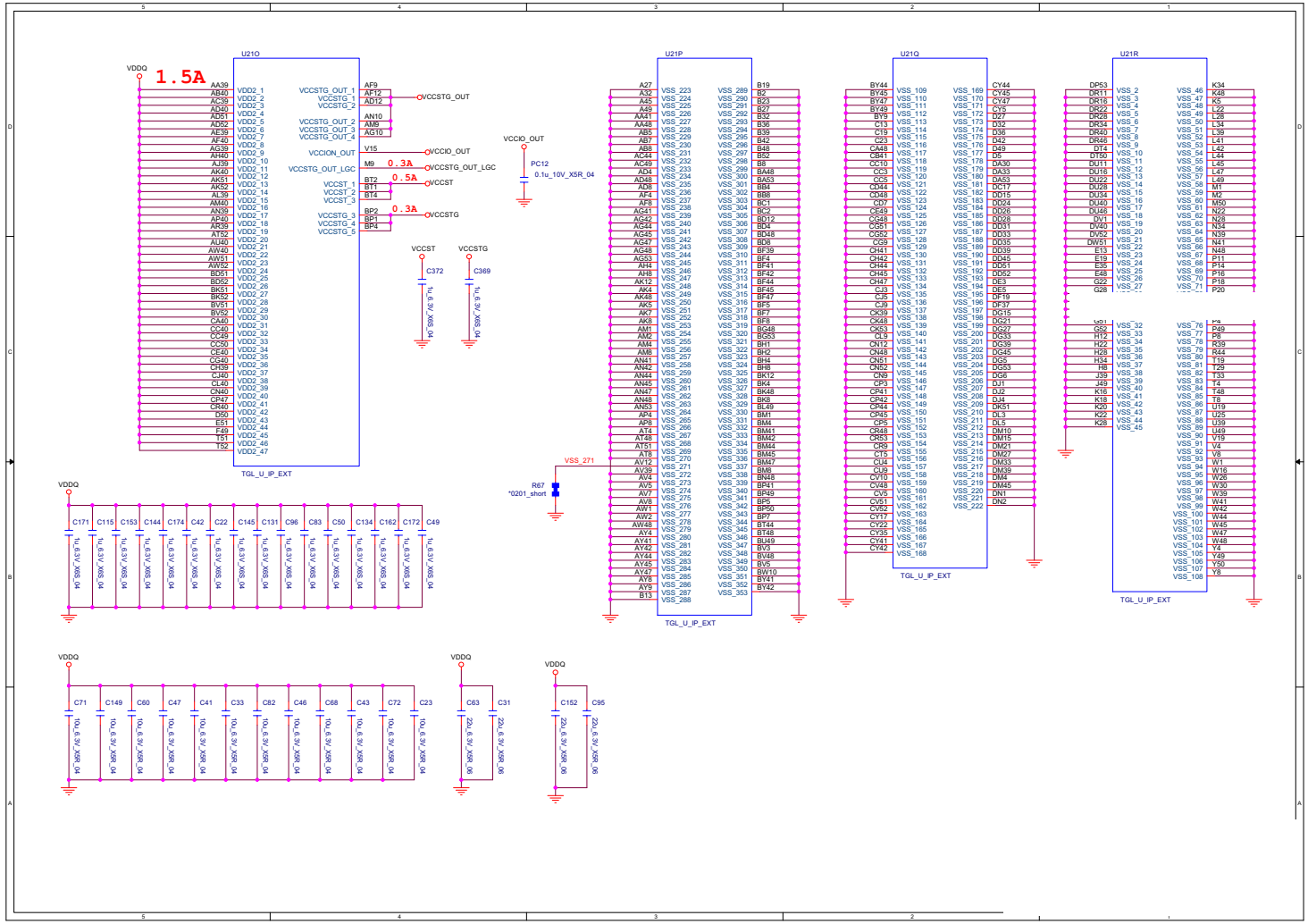

Sheet 12 of 47
Processor 11/12

Processor 12/12

Sheet 13 of 47
Processor 12/12

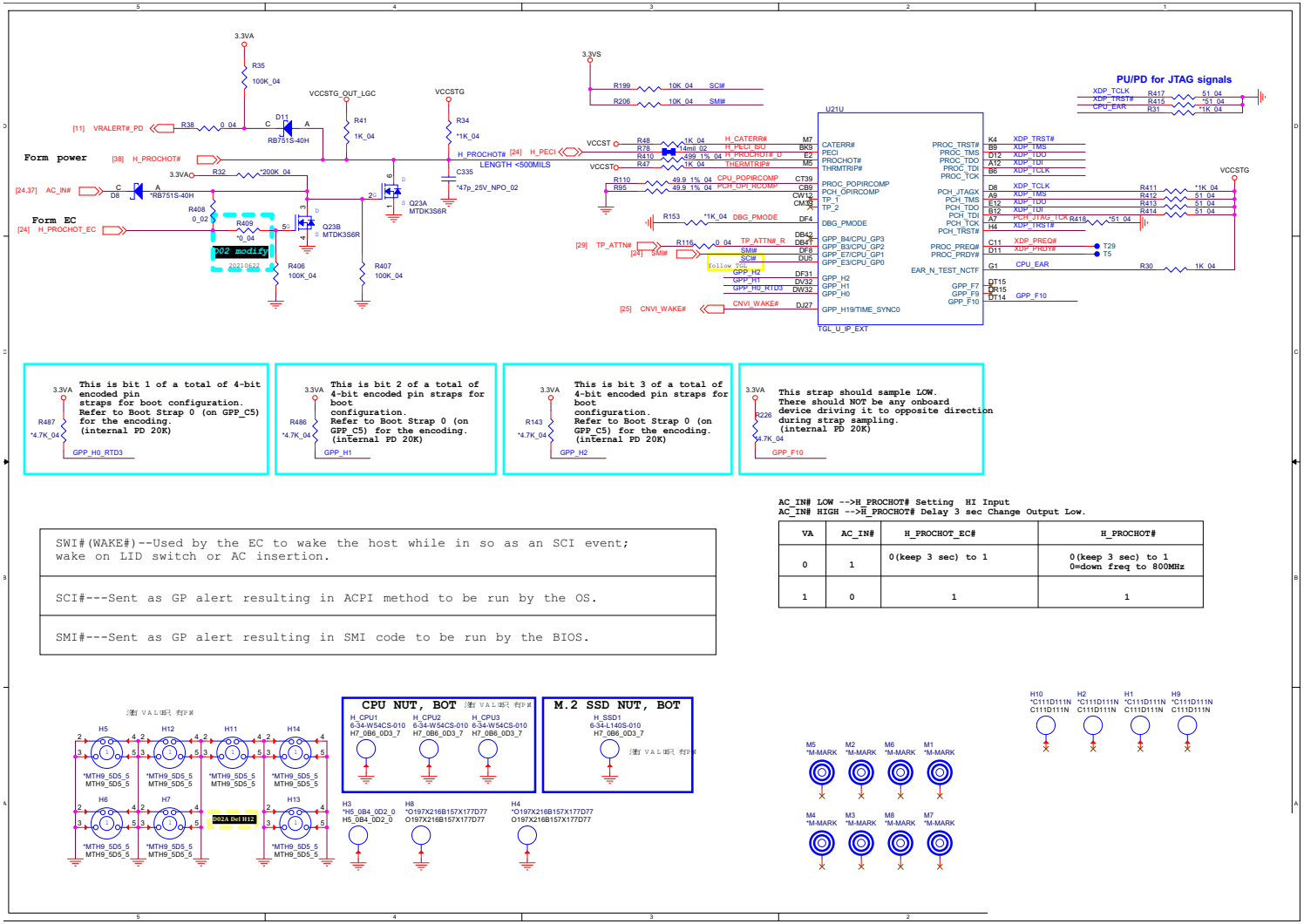

AC_IN# LOW -->H_PROCHOT# Setting HI Input
AC_IN# HIGH -->H_PROCHOT# Delay 3 sec Change Output Low.

VA	AC_IN#	H_PROCHOT_EC#	H_PROCHOT#
0	1	0(keep 3 sec) to 1	0(keep 3 sec) to 1 0=down freq to 800MHz
1	0	1	1

SWI#(WAKE#)--Used by the EC to wake the host while in so as an SCI event; wake on LID switch or AC insertion.
SCI#---Sent as GP alert resulting in ACPI method to be run by the OS.
SMI#---Sent as GP alert resulting in SMI code to be run by the BIOS.

DDR4 SO-DIMM_A

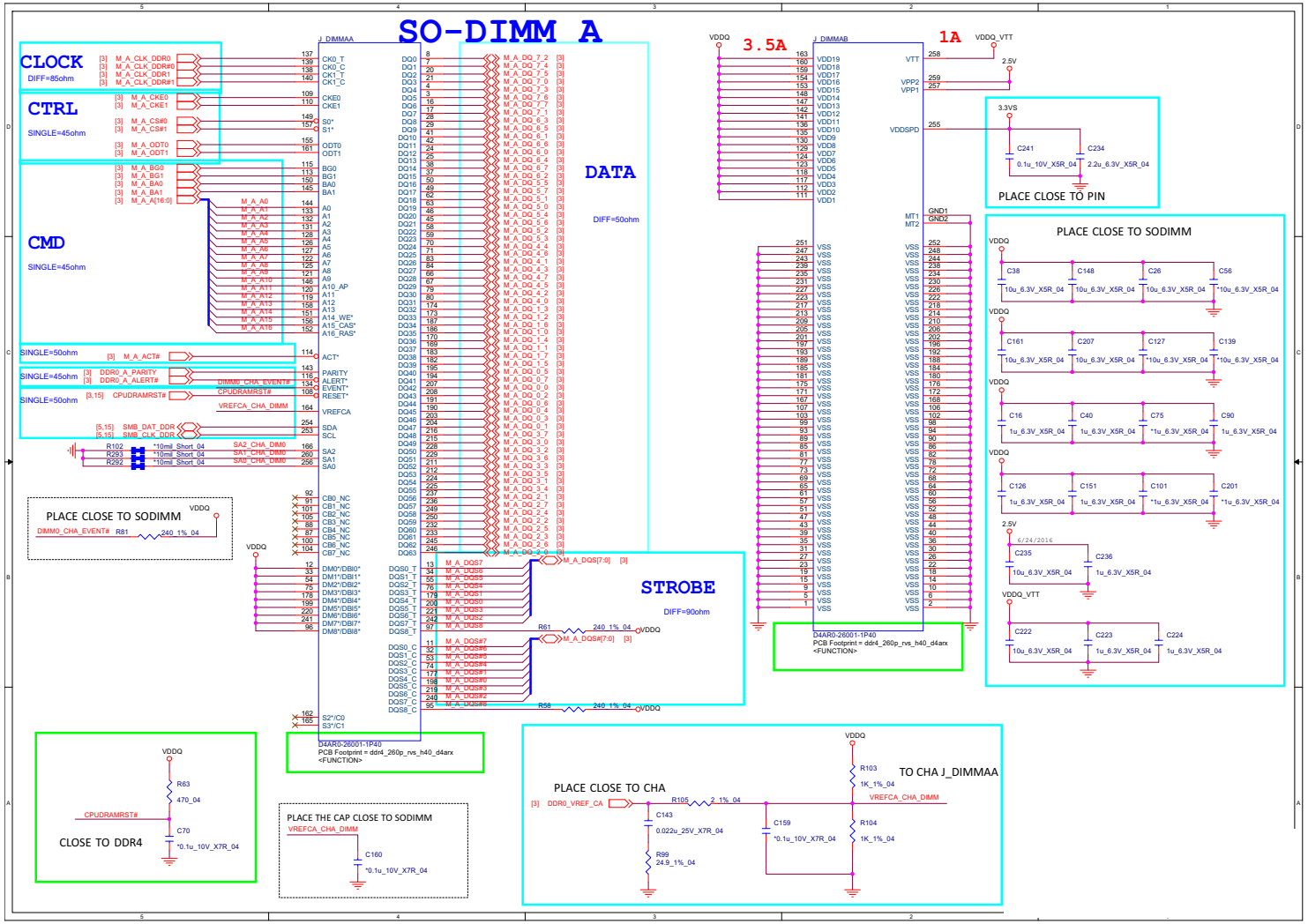

Sheet 14 of 47
DDR4 SO-DIMM_A

DDR4 SO-DIMM_B

Sheet 15 of 47
DDR4 SO-DIMM_B

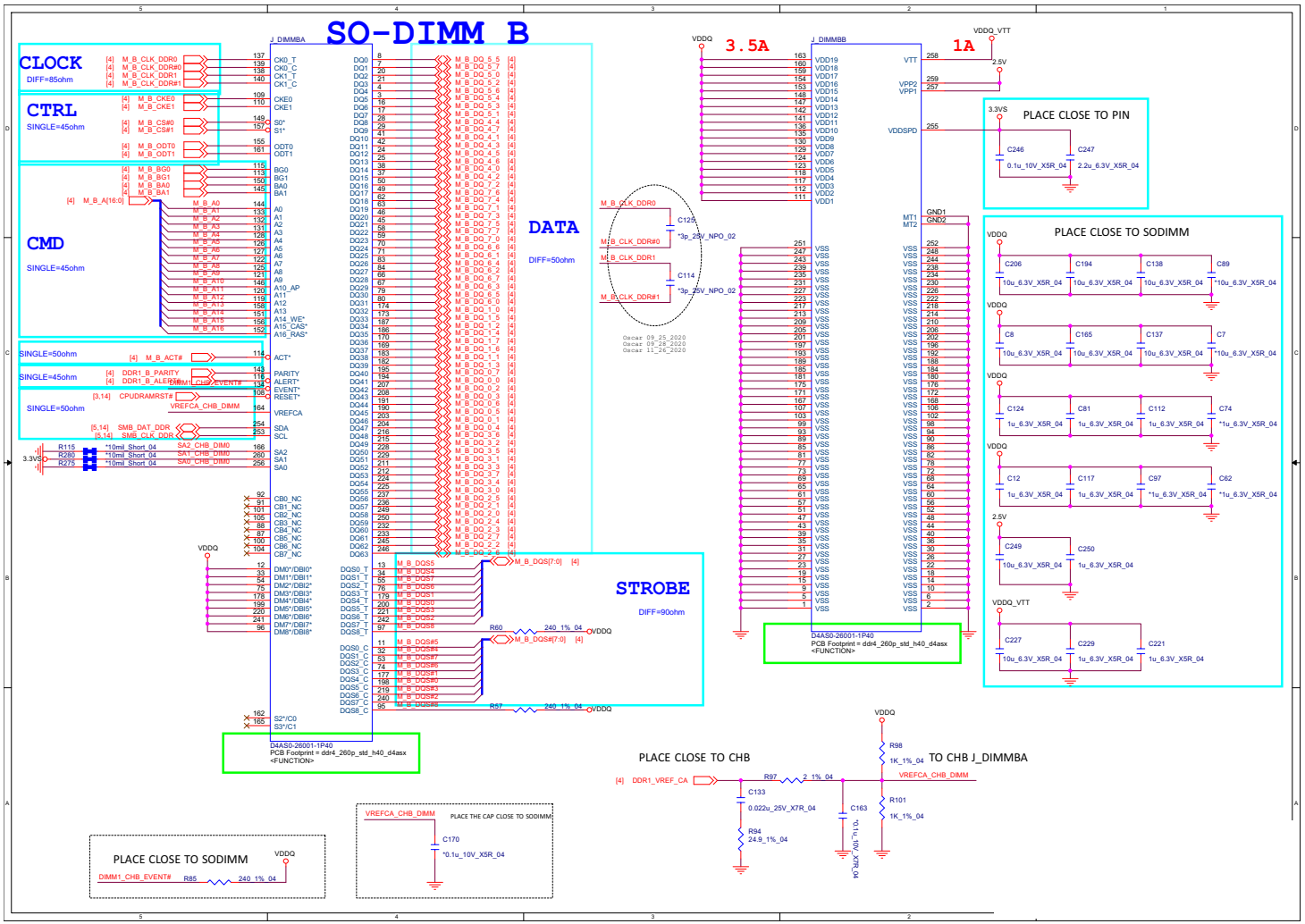

HDMI

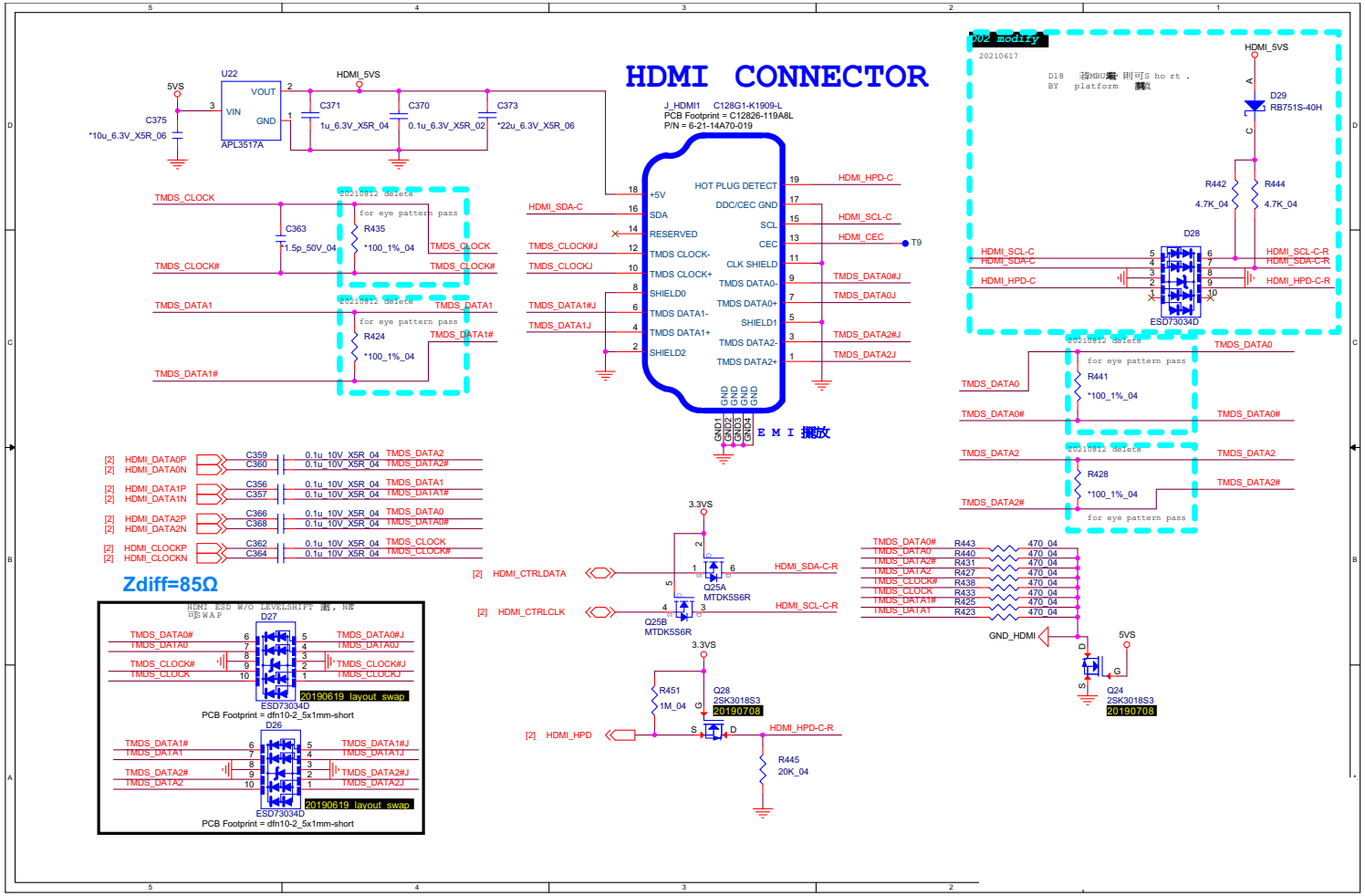

Sheet 16 of 47
HDMI

Panel

Sheet 17 of 47
Panel

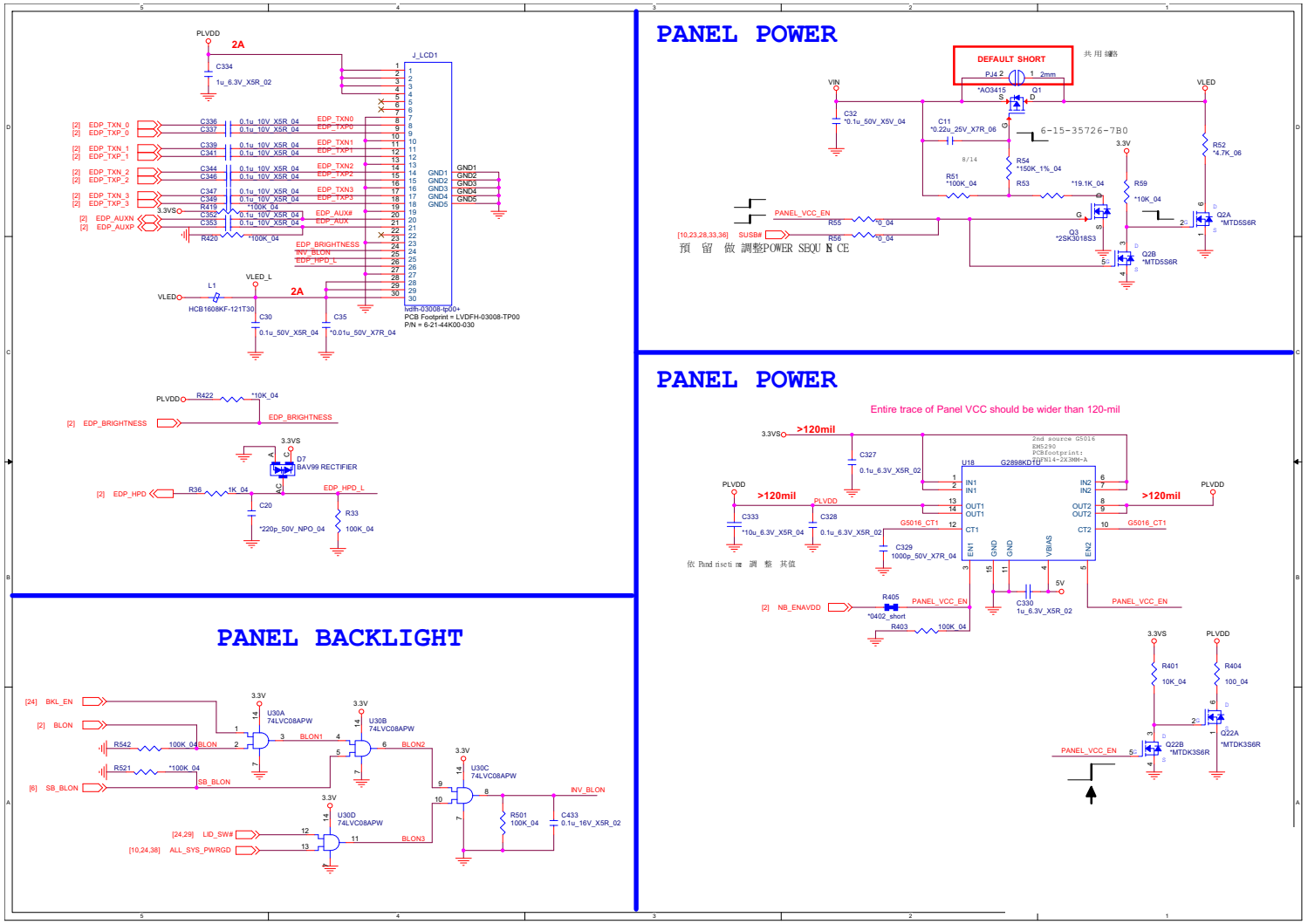

USB Type-C ANX7443

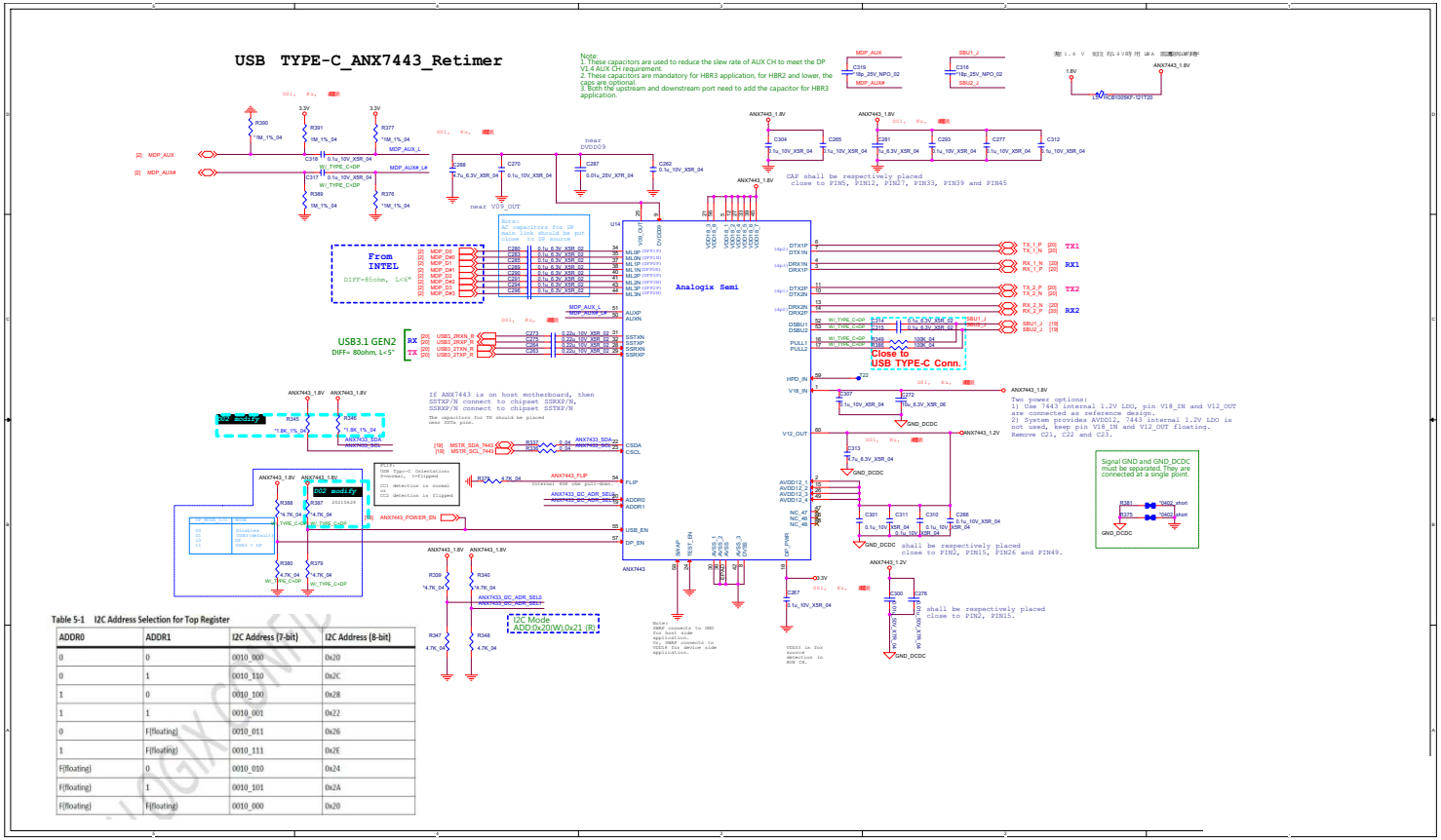

Table 5-1 I2C Address Selection for Top Register

ADDR0	ADDR1	I2C Address (7-bit)	I2C Address (8-bit)
0	0	0010_000	0x20
0	1	0010_110	0x2C
1	0	0010_100	0x28
1	1	0010_001	0x22
0	F(floating)	0010_011	0x26
1	F(floating)	0010_111	0x2E
F(floating)	0	0010_010	0x24
F(floating)	1	0010_101	0x2A
F(floating)	F(floating)	0010_000	0x20

Sheet 18 of 47
USB Type-C
ANX7443

ANX7411, Type-C

Sheet 19 of 47
ANX7411, Type-C

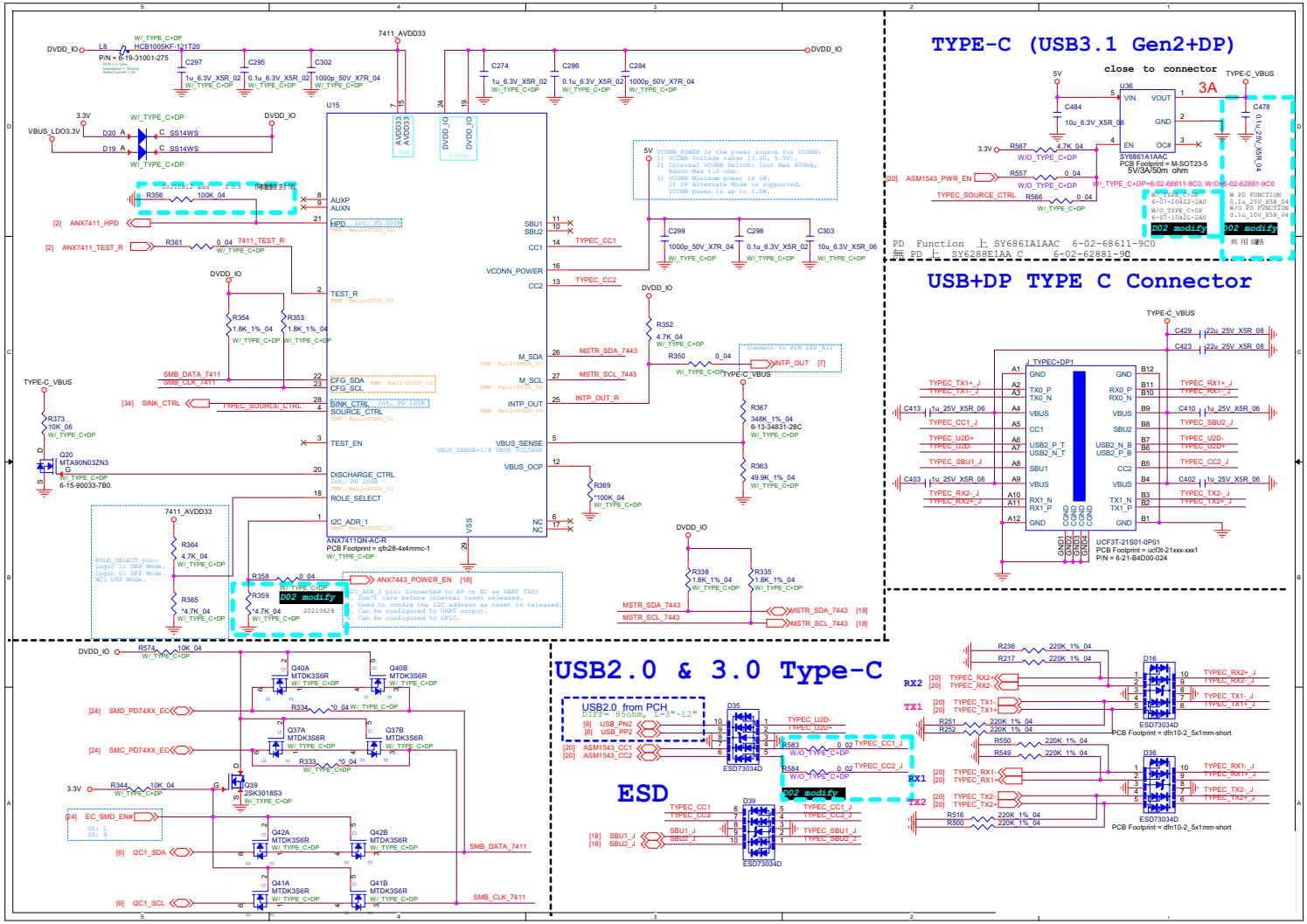

ASM1543

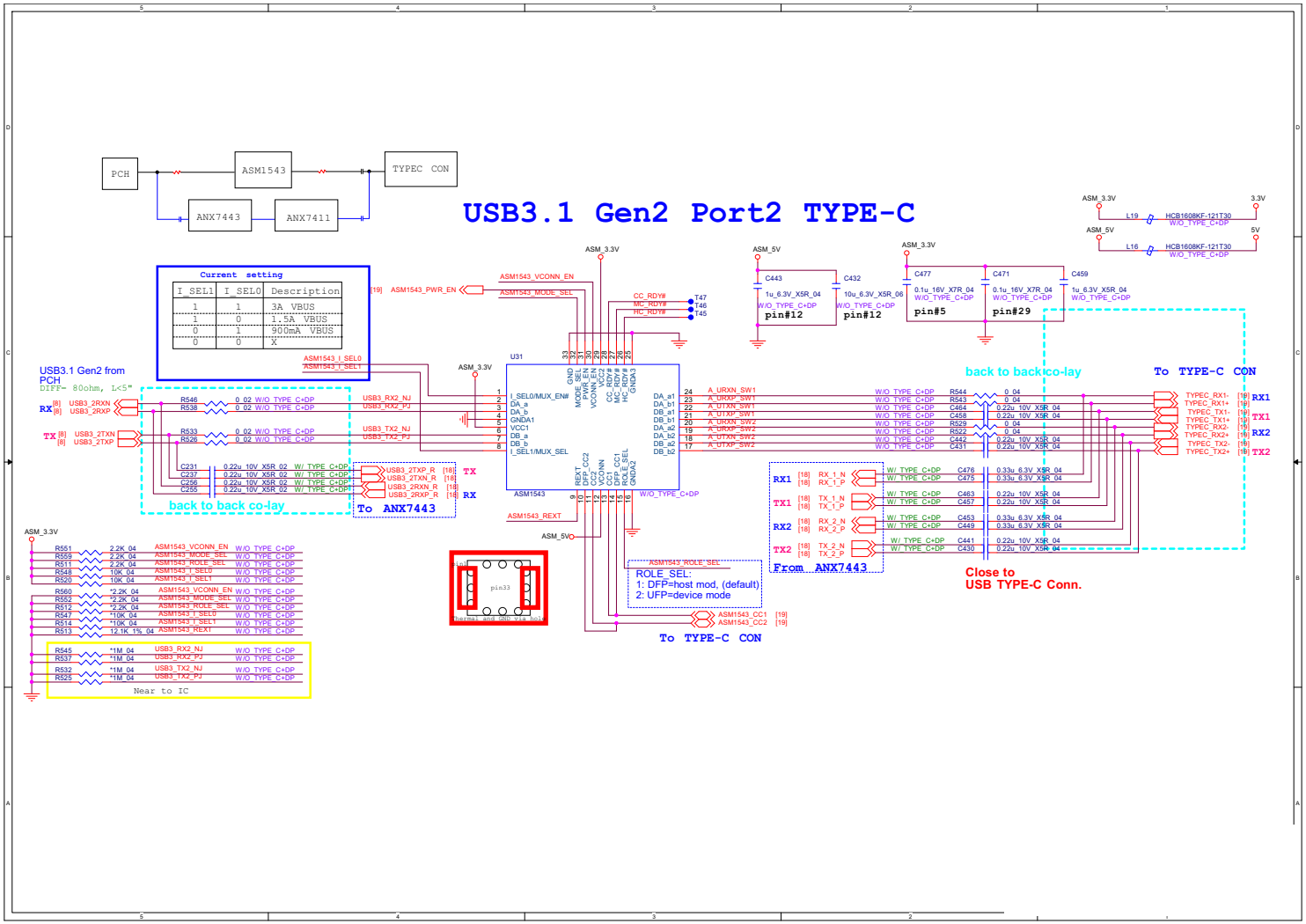

Sheet 20 of 47
ASM1543

LED KB, LED

Sheet 21 of 47
LED KB, LED

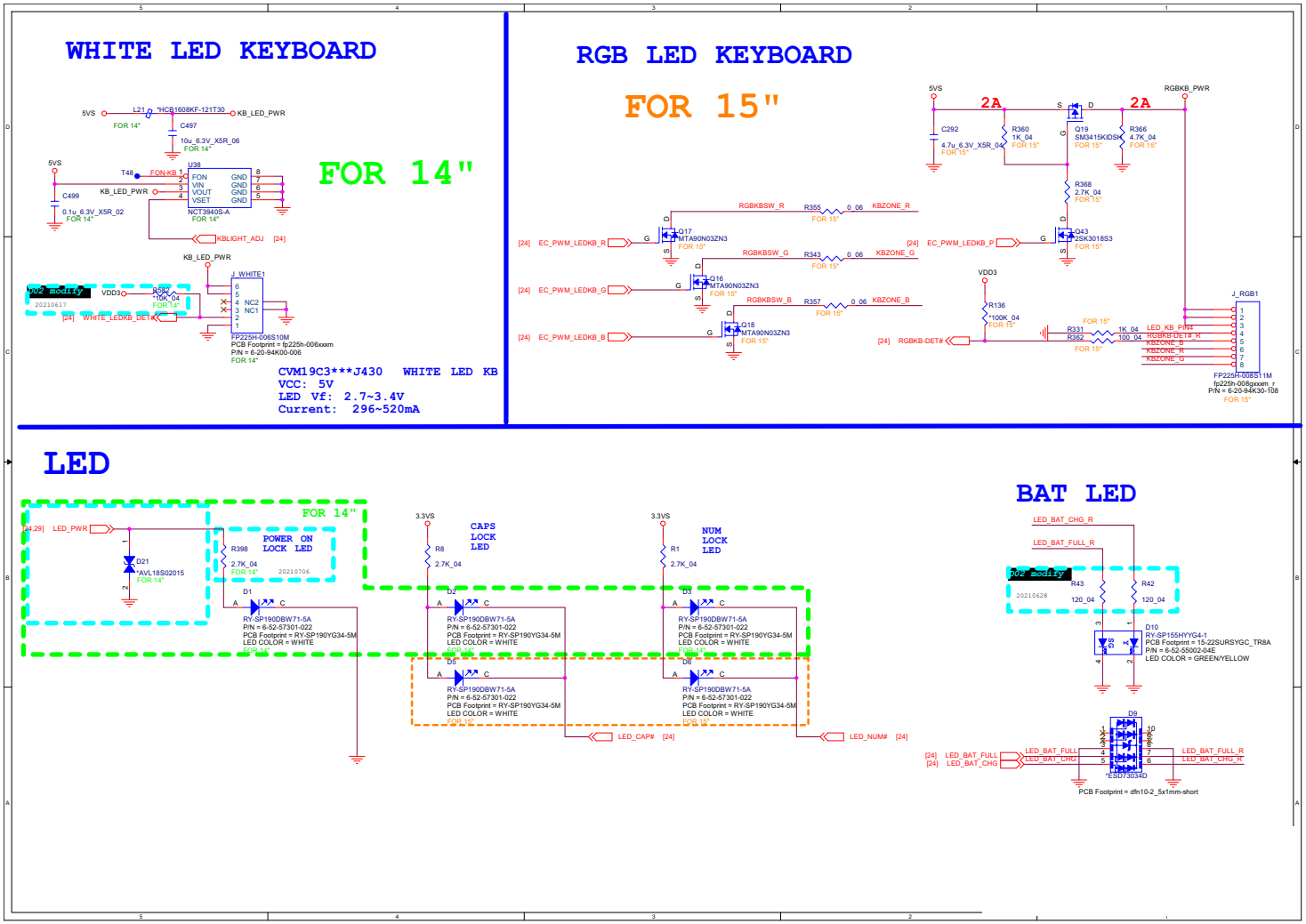

SATA HDD, TPM

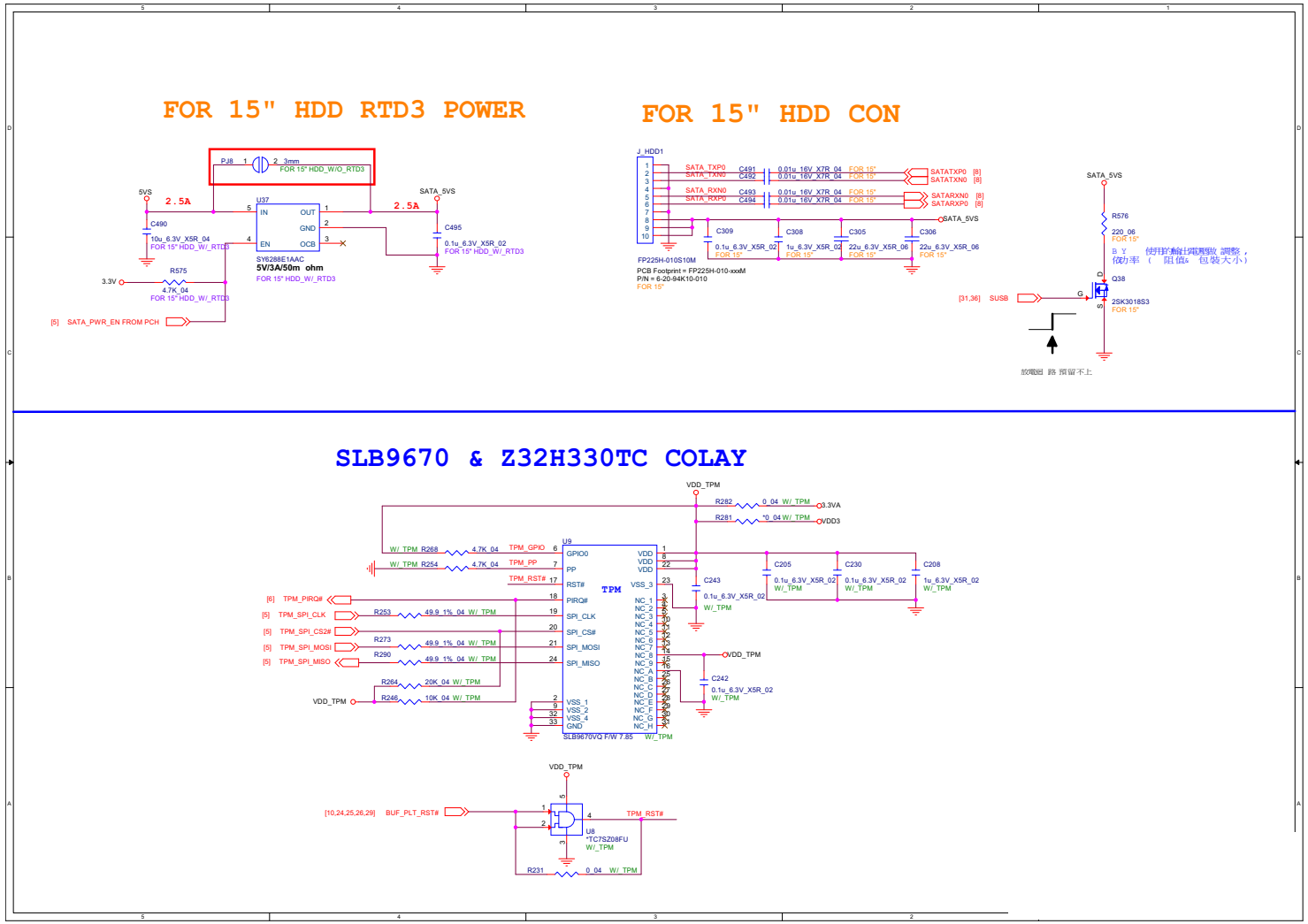

Sheet 22 of 47
SATA HDD, TPM

Audio Codec

Sheet 23 of 47
Audio Codec

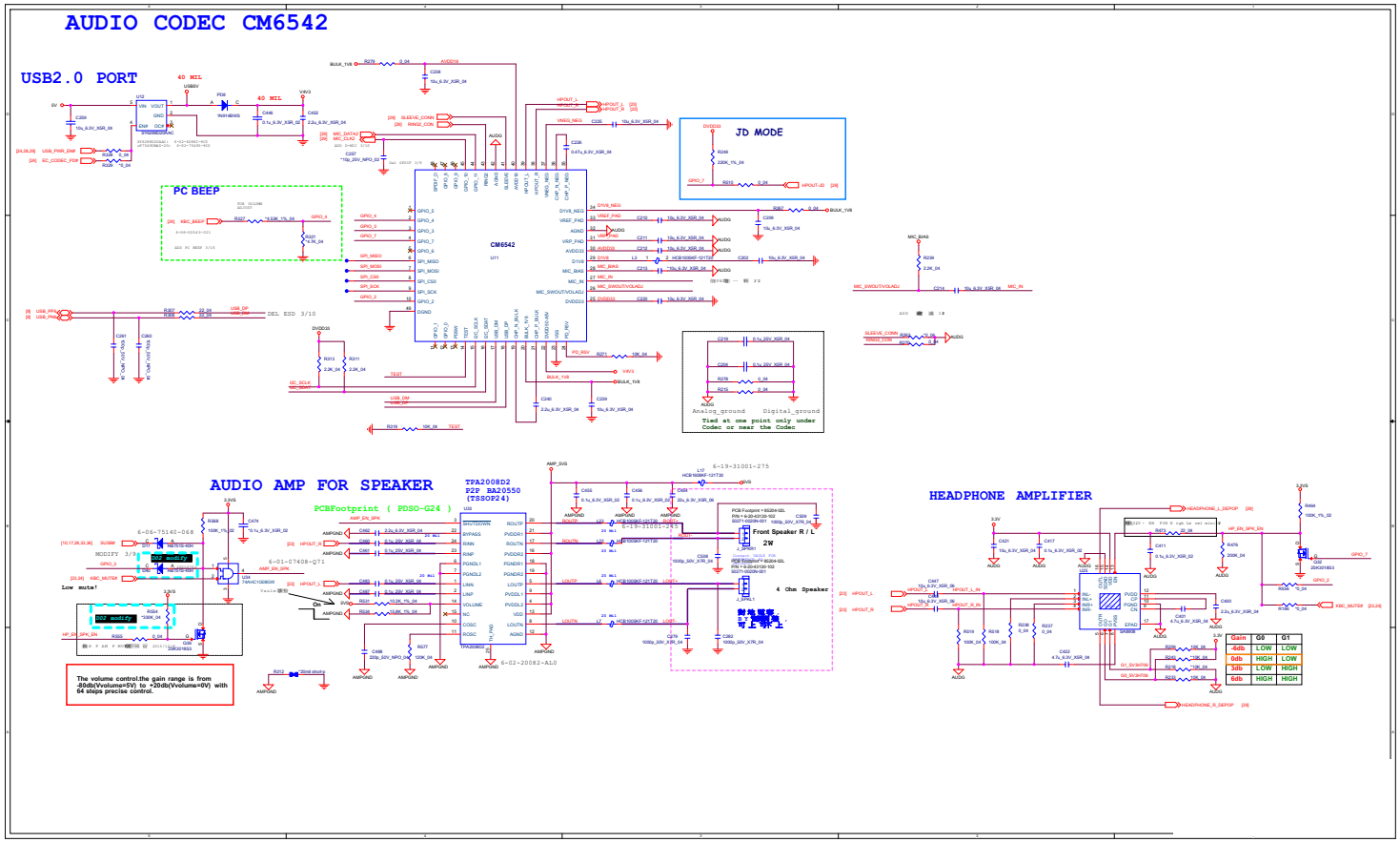

KBC ITE IT5570

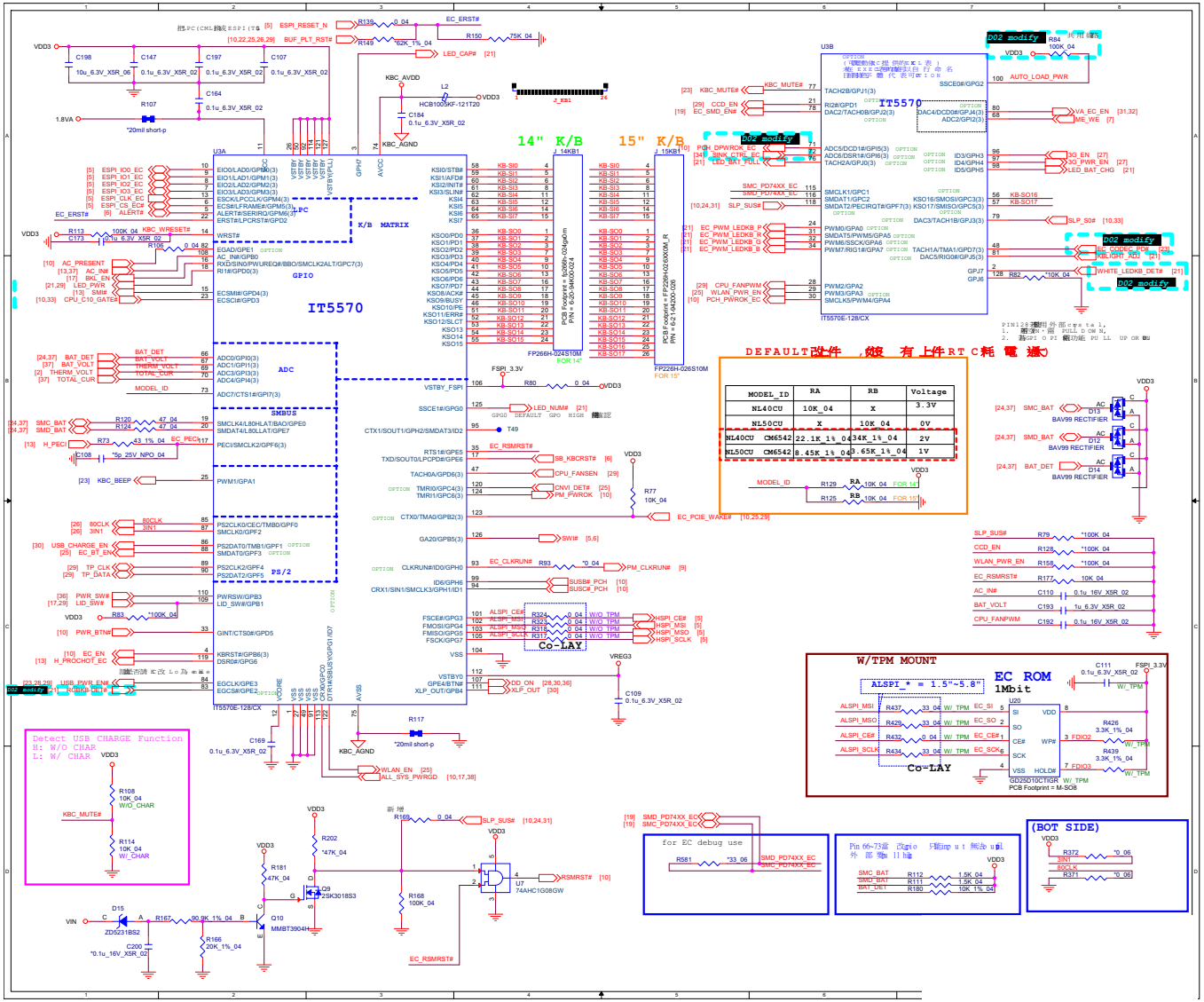

Sheet 24 of 47
KBC ITE IT5570

WLAN

Sheet 25 of 47
WLAN

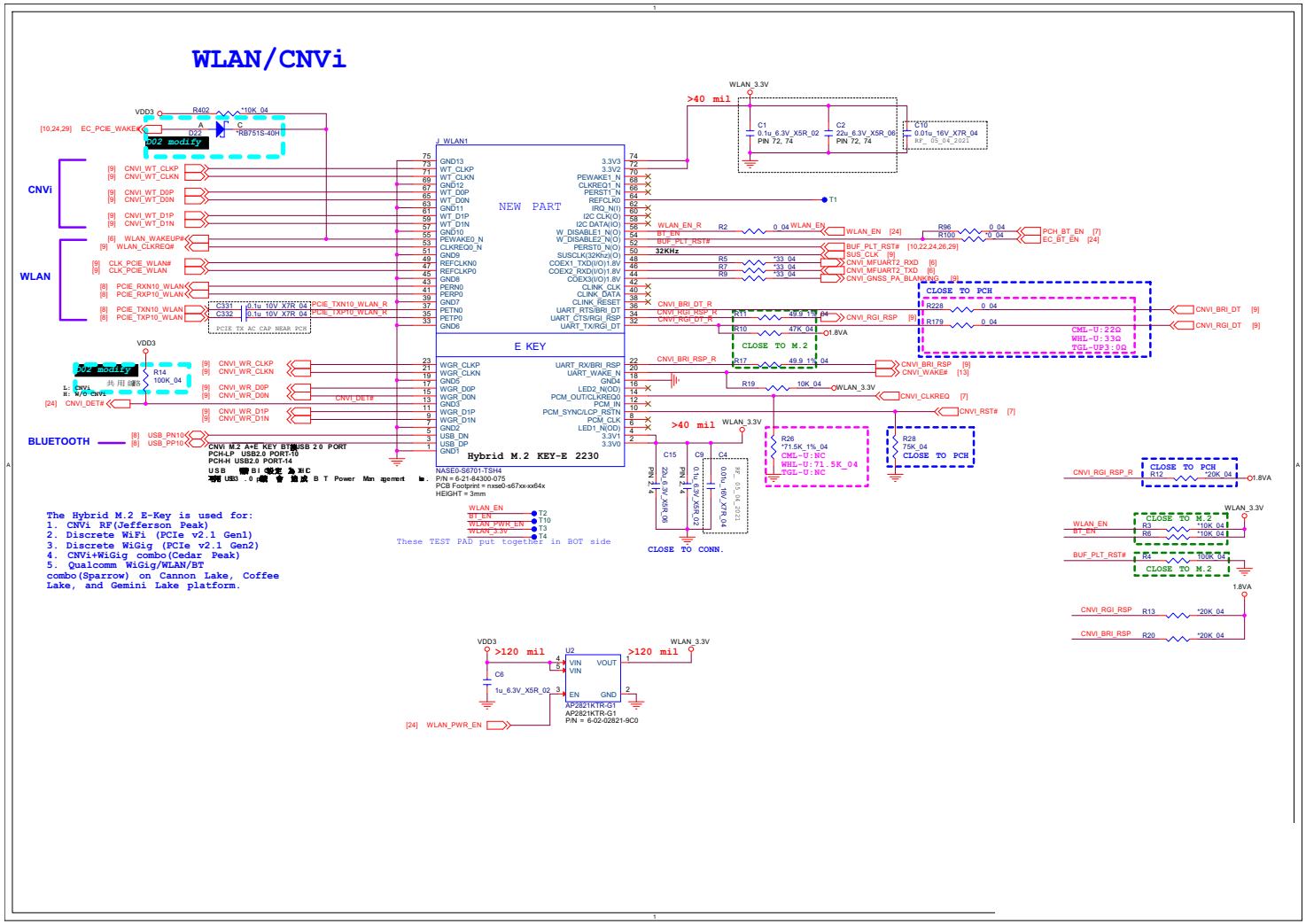

M Key PCIE SSD

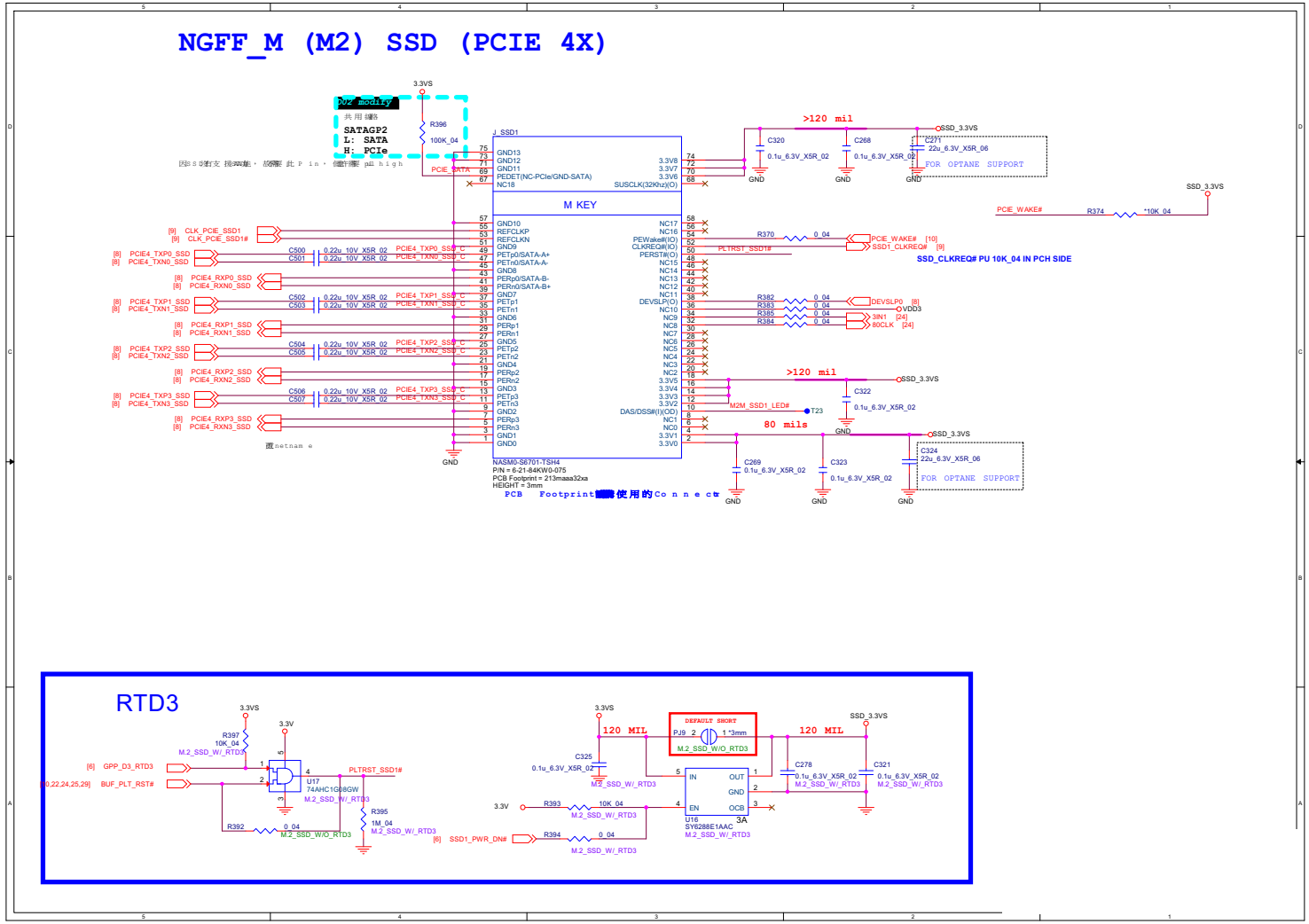

Sheet 26 of 47
M Key PCIE SSD

3G/LTE

Sheet 27 of 47
3G/LTE

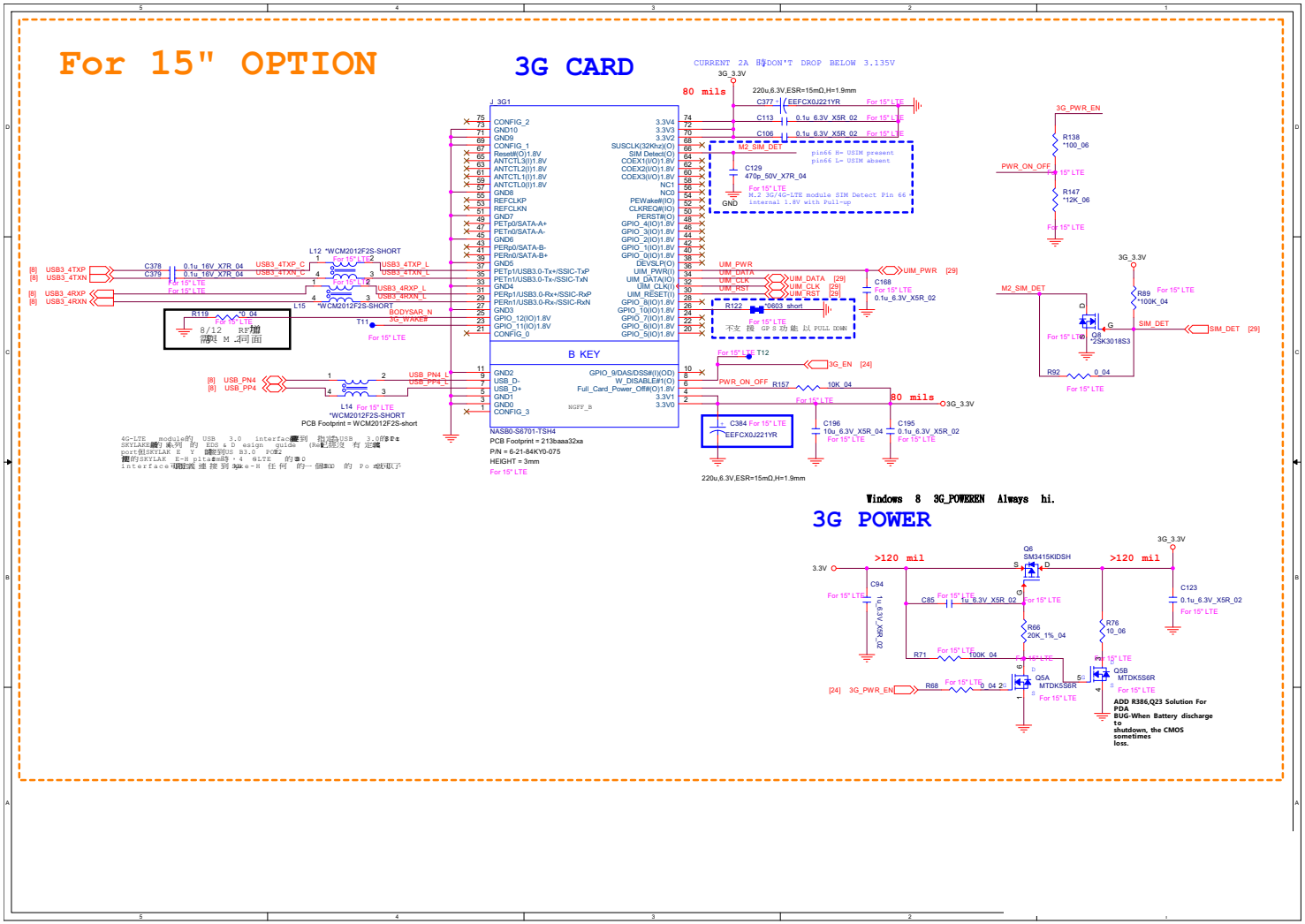

USB Type-A

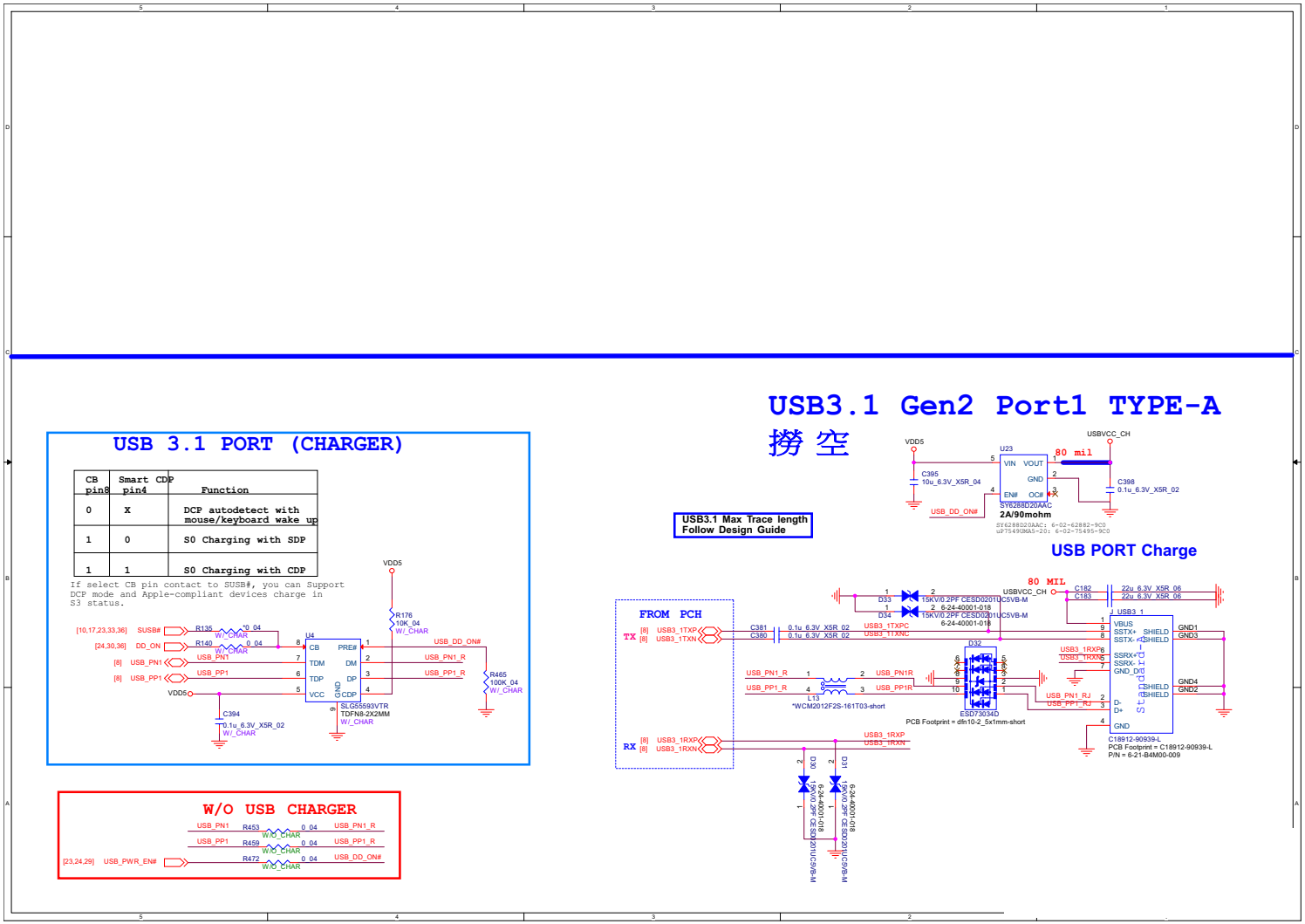

Sheet 28 of 47
USB Type-A

Conn, CCD, Fan, TP

Sheet 29 of 47
Conn, CCD, Fan, TP

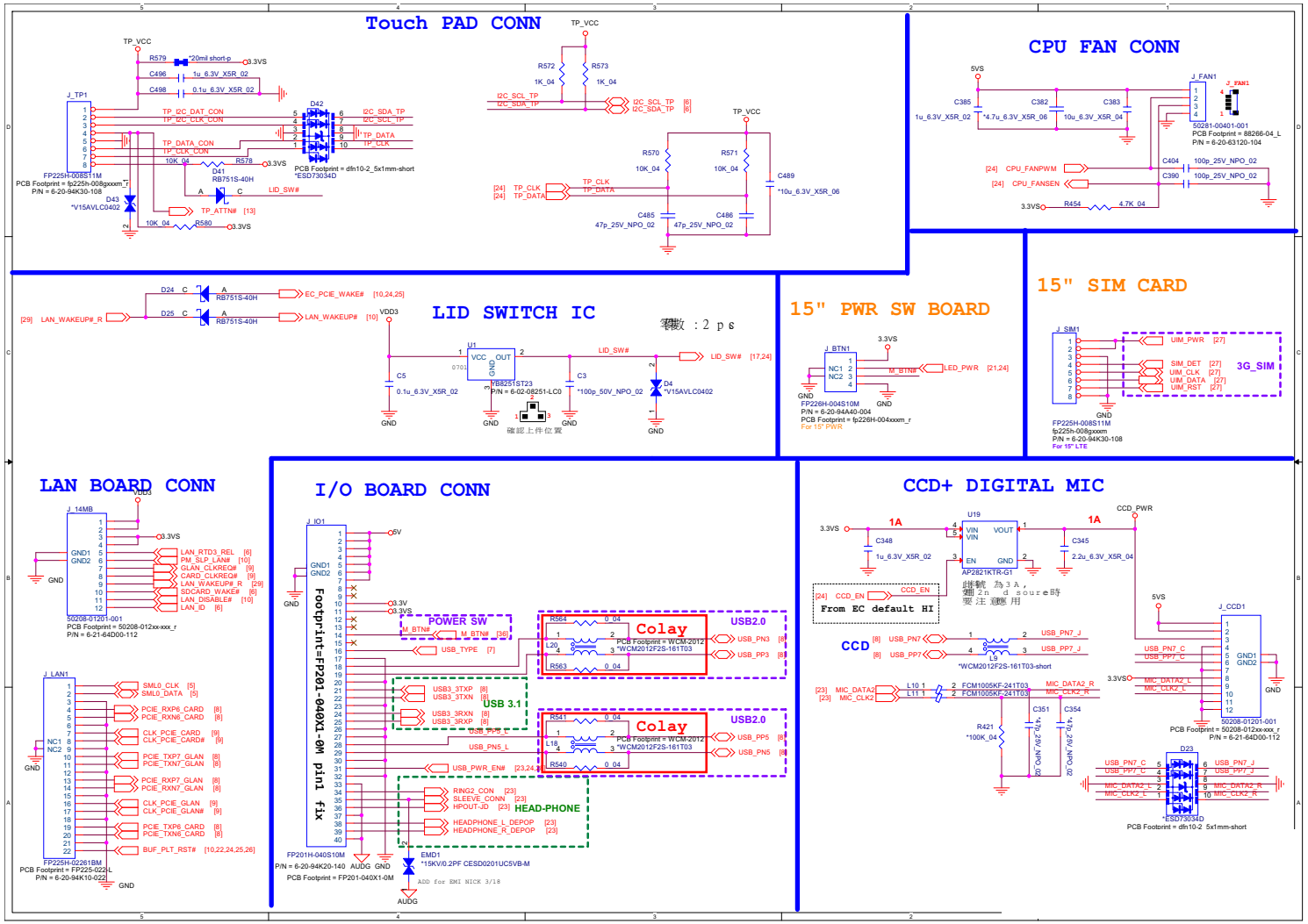

VDD3, VDD5

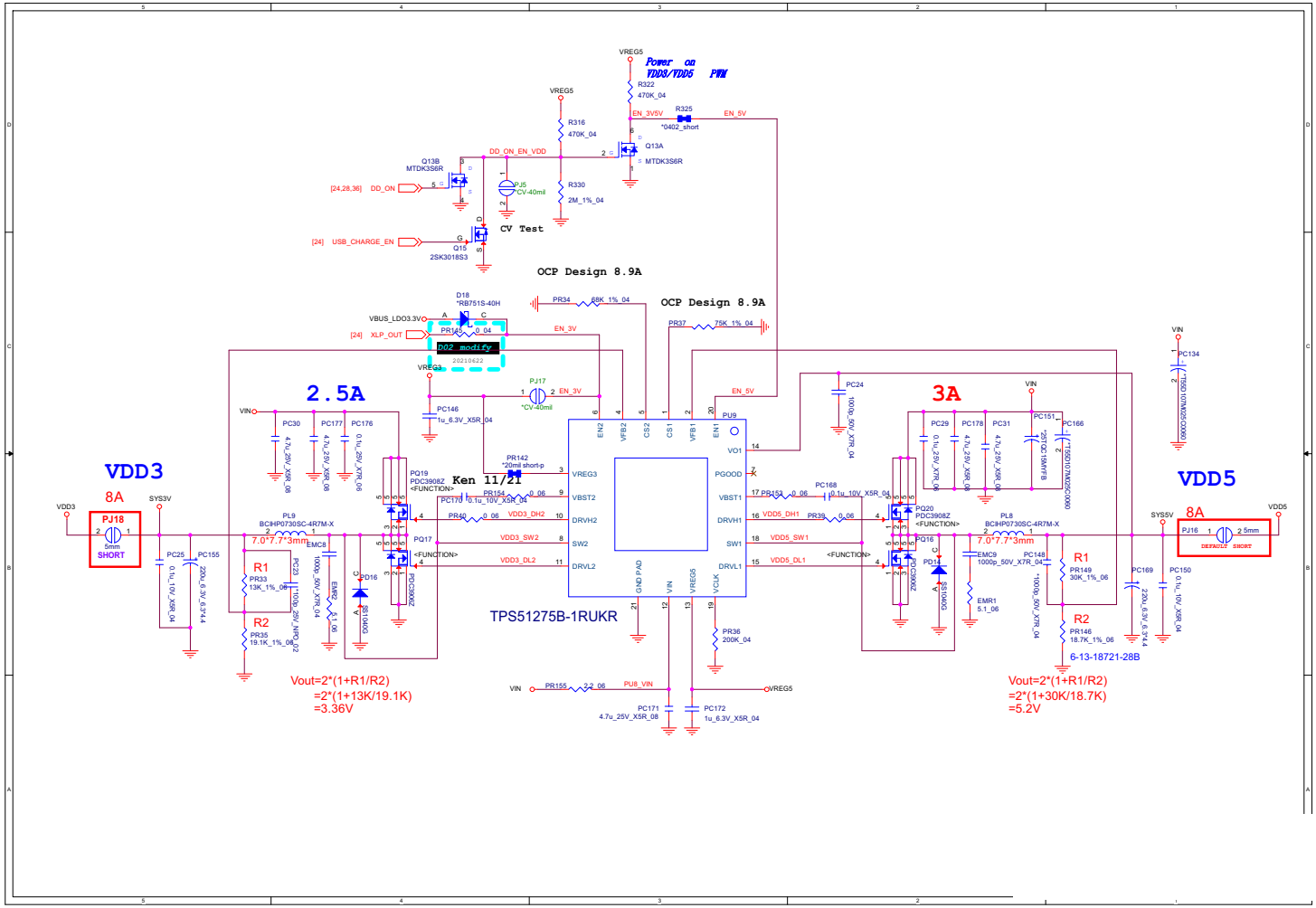

Sheet 30 of 47
VDD3, VDD5

VDDQ, VDDQ_VTT, 1.8VA

Sheet 31 of 47
VDDQ, VDDQ_VTT, 1.8VA

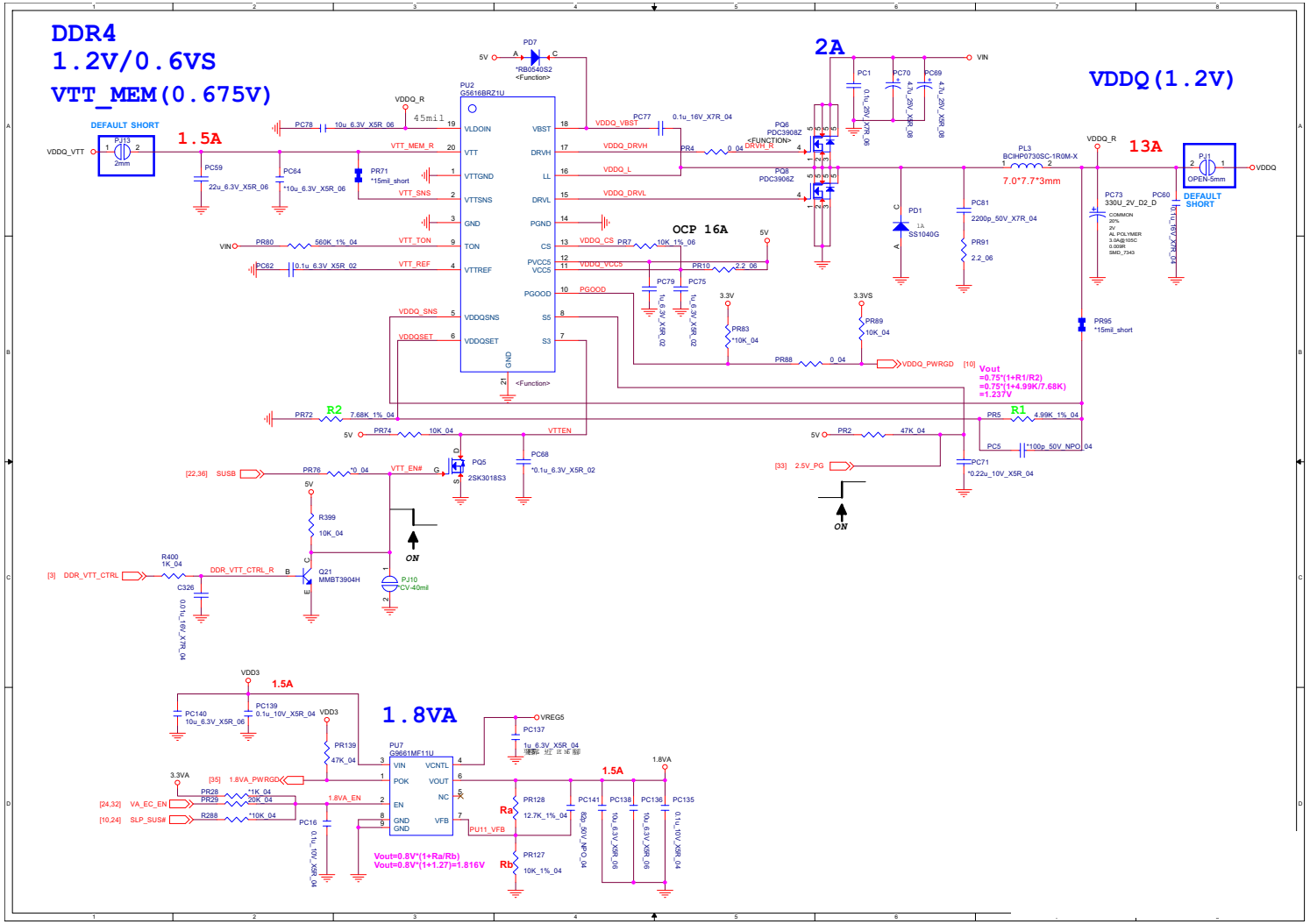

3.3VA, 1.8V

W/ TPM			W/O TPM		
C316	0.1u_6.3V_X5R_02	6-07-10421-2K0	R404	100K_04	6-14-1043B-01B
C317	0.1u_6.3V_X5R_02	6-07-10421-2K0	R599	0_04	6-14-0003B-01B
C321	0.1u_6.3V_X5R_02	6-07-10421-2K0	R600	0_04	6-14-0003B-01B
C327	0.1u_6.3V_X5R_02	6-07-10421-2K0	R601	0_04	6-14-0003B-01B
R271	0_04	6-14-0003B-01B	R602	0_04	6-14-0003B-01B
R414	15_1%_04	6-13-15R01-28C	R253	0_04	6-14-0003B-01B
R416	15_1%_04	6-13-15R01-28C	R260	0_04	6-14-0003B-01B
R417	15_1%_04	6-13-15R01-28C	R261	0_04	6-14-0003B-01B
R419	15_1%_04	6-13-15R01-28C	R269	0_04	6-14-0003B-01B
R415	15_1%_04	6-13-15R01-28C			
R418	15_1%_04	6-13-15R01-28C			
R445	15_1%_04	6-13-15R01-28C			
R395	10K_04	6-14-1033B-01B			
R132	10_04	6-14-1003B-01B			
R143	10_04	6-14-1003B-01B			
R155	10_04	6-14-1003B-01B			
R156	10_04	6-14-1003B-01B			
R157	10_04	6-14-1003B-01B			
R446	10_04	6-14-1003B-01B			
C309	1u_6.3V_X5R_02	6-07-10511-2K0			
R389	4.7K_04	6-14-4723B-11B			
U10	SLB9670VQ	6-03-09670-030			
R255	3.3K_1%_04	6-13-33011-28B			
R274	3.3K_1%_04	6-13-33011-28B			
R254	33_04	6-14-3303B-11B			
R272	33_04	6-14-3303B-11B			
R273	33_04	6-14-3303B-11B			
U25	GD25D10BTIGR	6-04-02510-A91			
R390	4.7K_04	6-14-4723B-11B			

W/ USB CHARGER 3.1 TYPEA			W/O USB CHARGER 3.1 TYPEA		
C371^	0.1u_6.3V_X5R_02	6-07-10421-2K0	R199	0_04	6-14-0003B-01B
C379	0.1u_6.3V_X5R_02	6-07-10421-2K0	R200	0_04	6-14-0003B-01B
C364	10u_6.3V_X5R_04	6-07-10611-2A0	R472	0_04	6-14-0003B-01B
R462^	0_04	6-14-0003B-01B	R282	10K_04	6-14-1033B-01B
R470^	100K_04	6-14-1043B-11B			
R281	10K_04	6-14-1033B-01B			
R473^	10K_04	6-14-1033B-01B			
C380	22u_6.3V_X5R_06	6-07-22611-2G0			
C382	22u_6.3V_X5R_06	6-07-22611-2G0			
D4	ESD73034D	6-24-40001-022			
D5	ESD73034D	6-24-40001-022			
U22^	SLG55593VTR	6-02-55593-9D0			
U20	uP7549UMA5-20	6-02-75495-9C0			
J USB3_1	2UB3M04-023201F	6-21-B4M00-009			
L9	WCM2012F2S-900T04	6-19-41001-287			
C150	0.22u_10V_X5R_04	6-07-2242L-2A0			
C151	0.22u_10V_X5R_04	6-07-2242L-2A0			
C488	0.33u_6.3V_X5R_04	6-07-33421-2A0			
C489	0.33u_6.3V_X5R_04	6-07-33421-2A0			

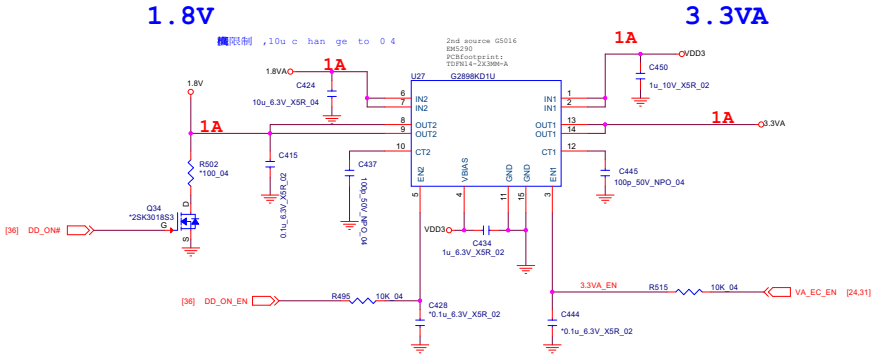

Sheet 32 of 47
3.3VA, 1.8V

2.5V, VCCST, VCCSTG

Sheet 33 of 47
2.5V, VCCST, VCCSTG

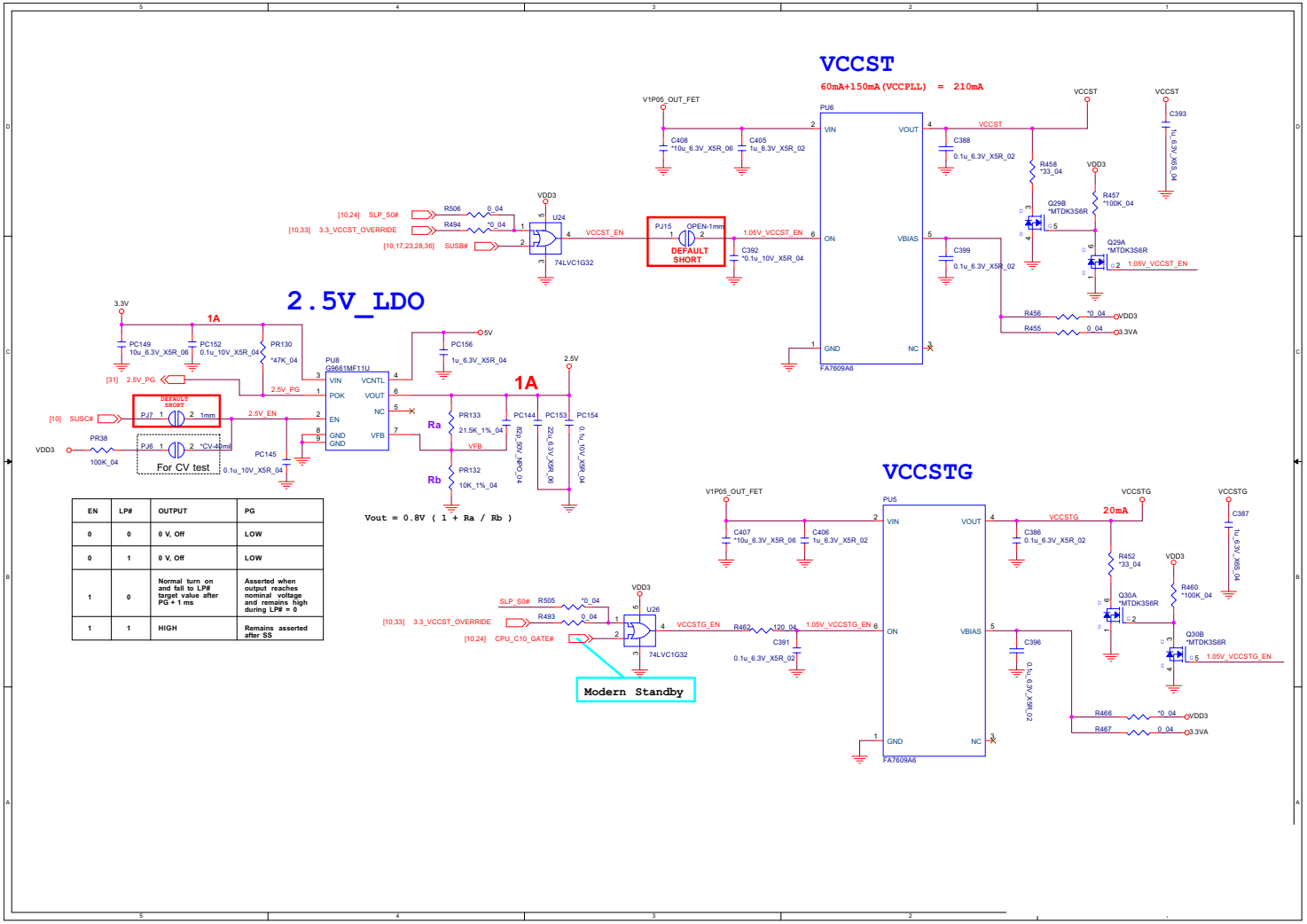

EN	LP#	OUTPUT	PG
0	0	0 V, Off	LOW
0	1	0 V, Off	LOW
1	0	Normal turn on and fall to LP# target value after PG + 1 ms	Asserted when output reaches nominal voltage and remains high during LP# = 0
1	1	HIGH	Remains asserted after SS

Power PD Function

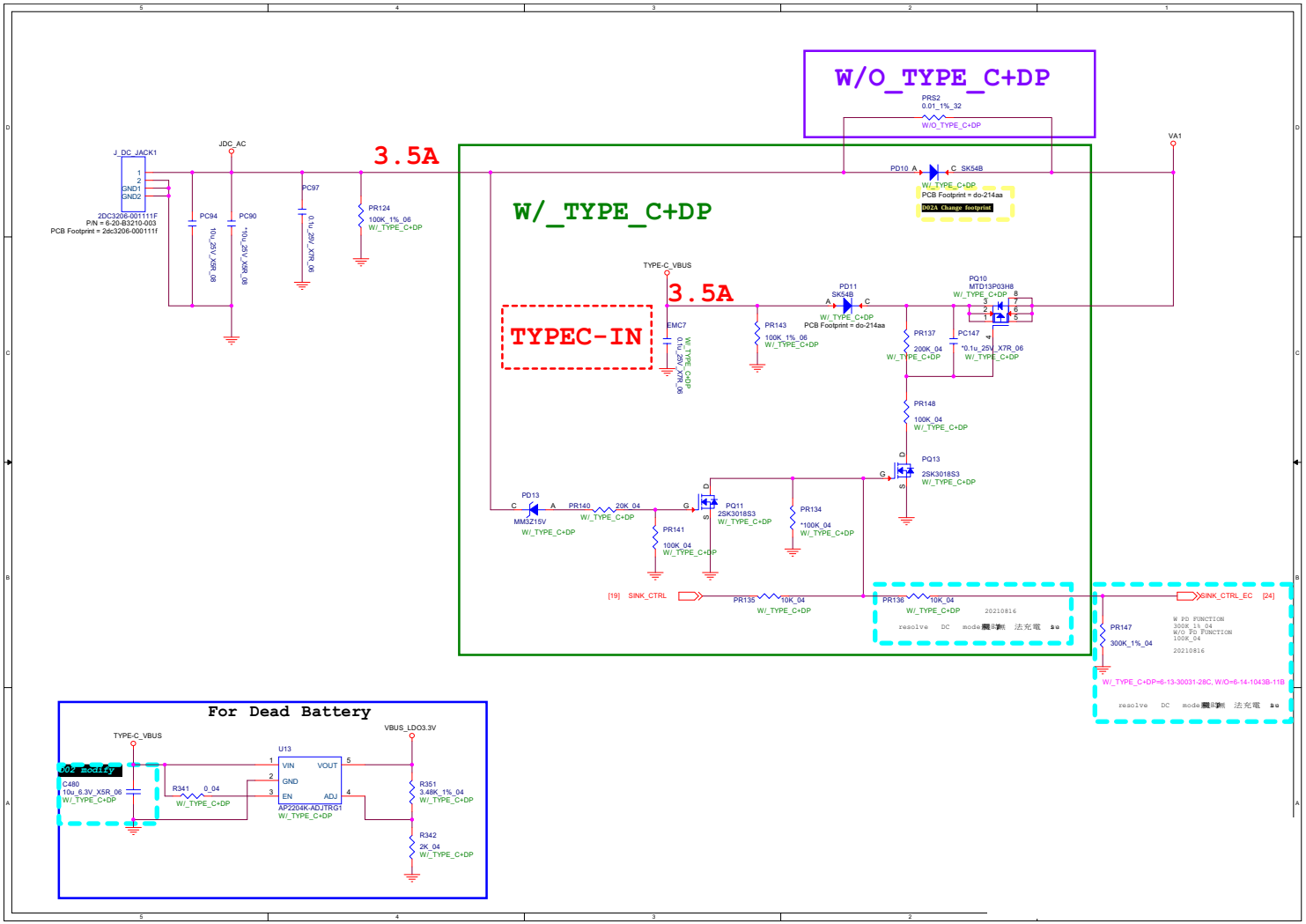

Sheet 34 of 47
Power PD Function

NCP81269

Sheet 35 of 47
NCP81269

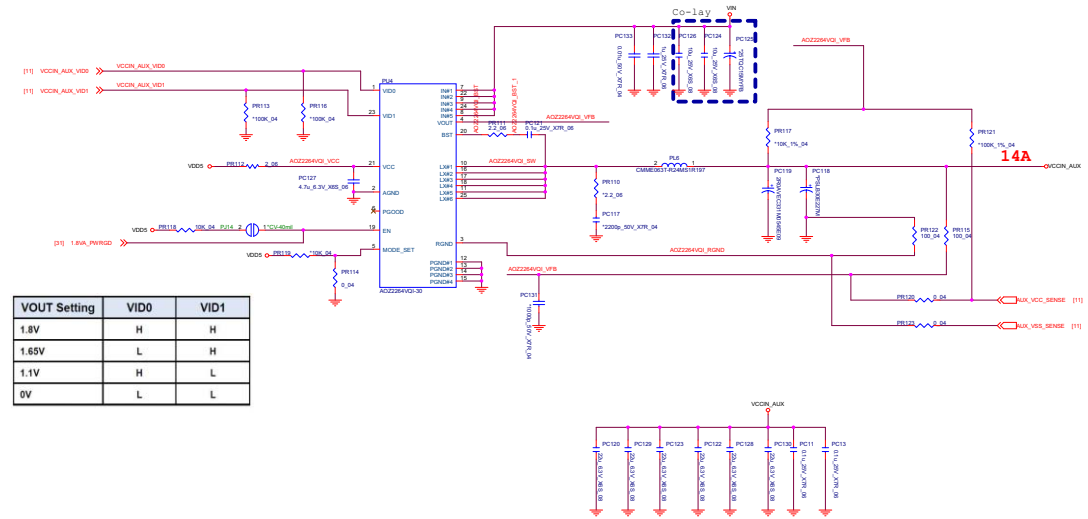

VOUT Setting	VID0	VID1
1.8V	H	H
1.65V	L	H
1.1V	H	L
0V	L	L

3.3V, 5V, 3VS, 5VS, CTL

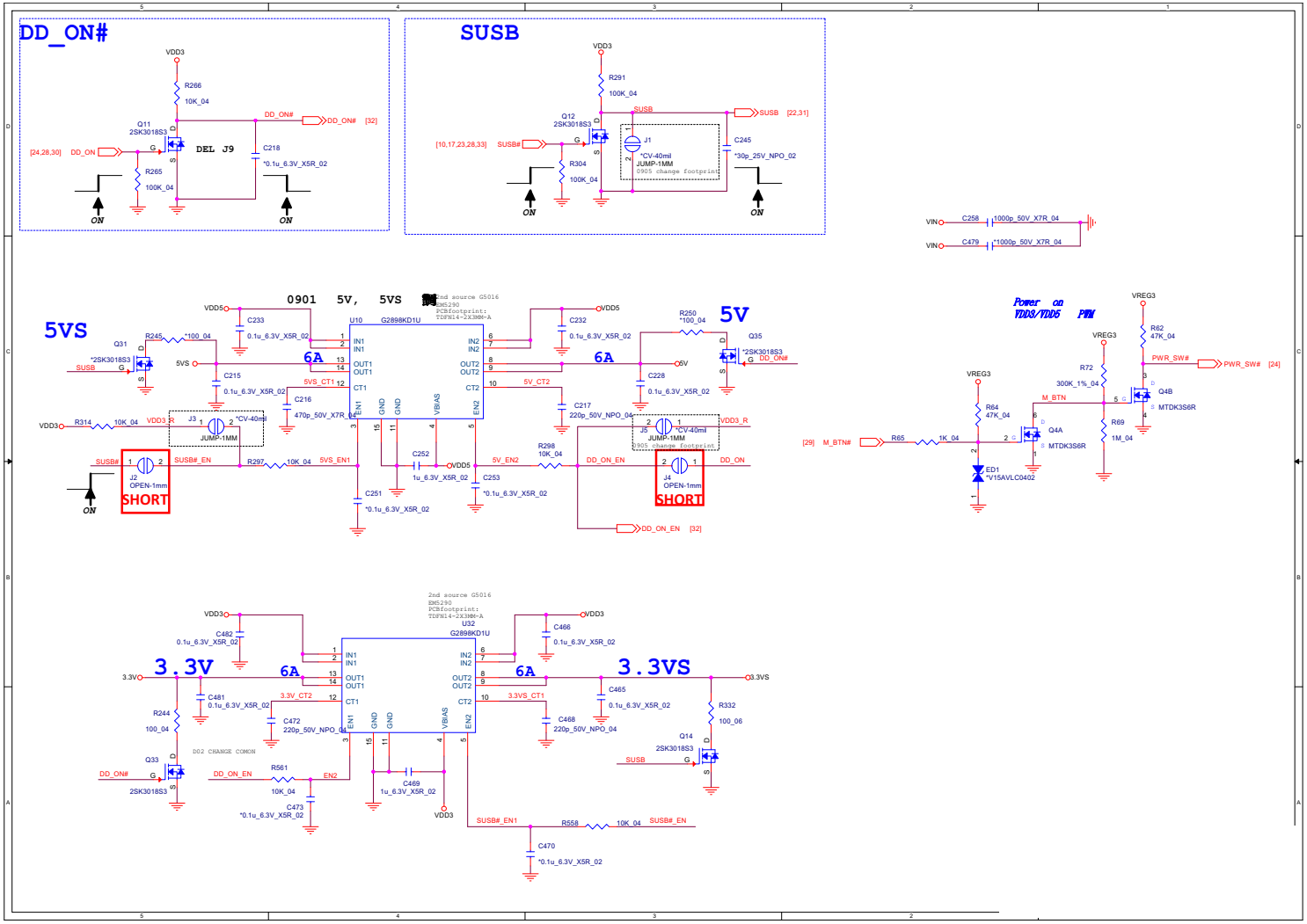

Sheet 36 of 47
3.3V, 5V, 3VS, 5VS, CTL

Charger, AC IN

Sheet 37 of 47
Charger, AC IN

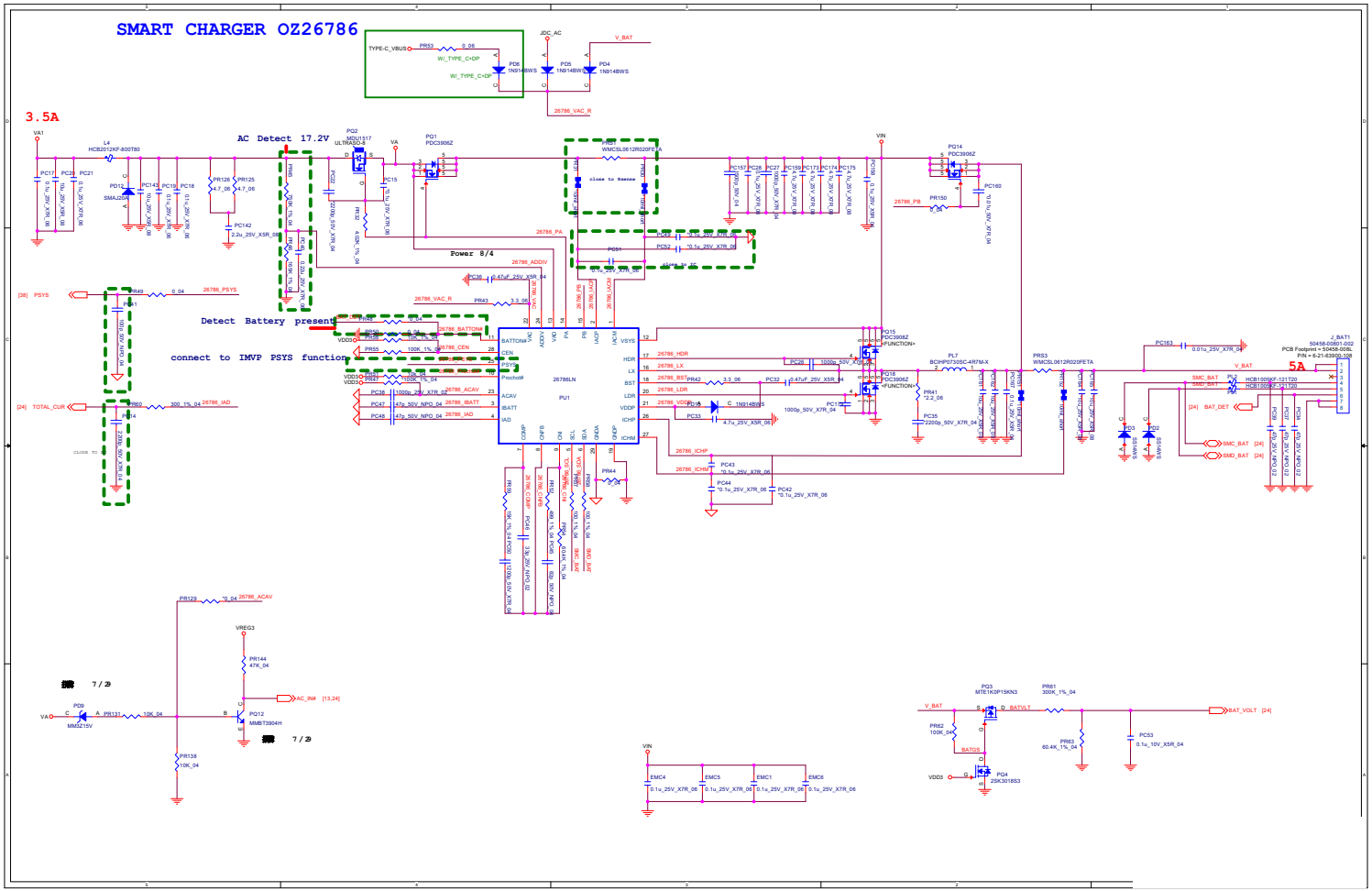

VCCIN

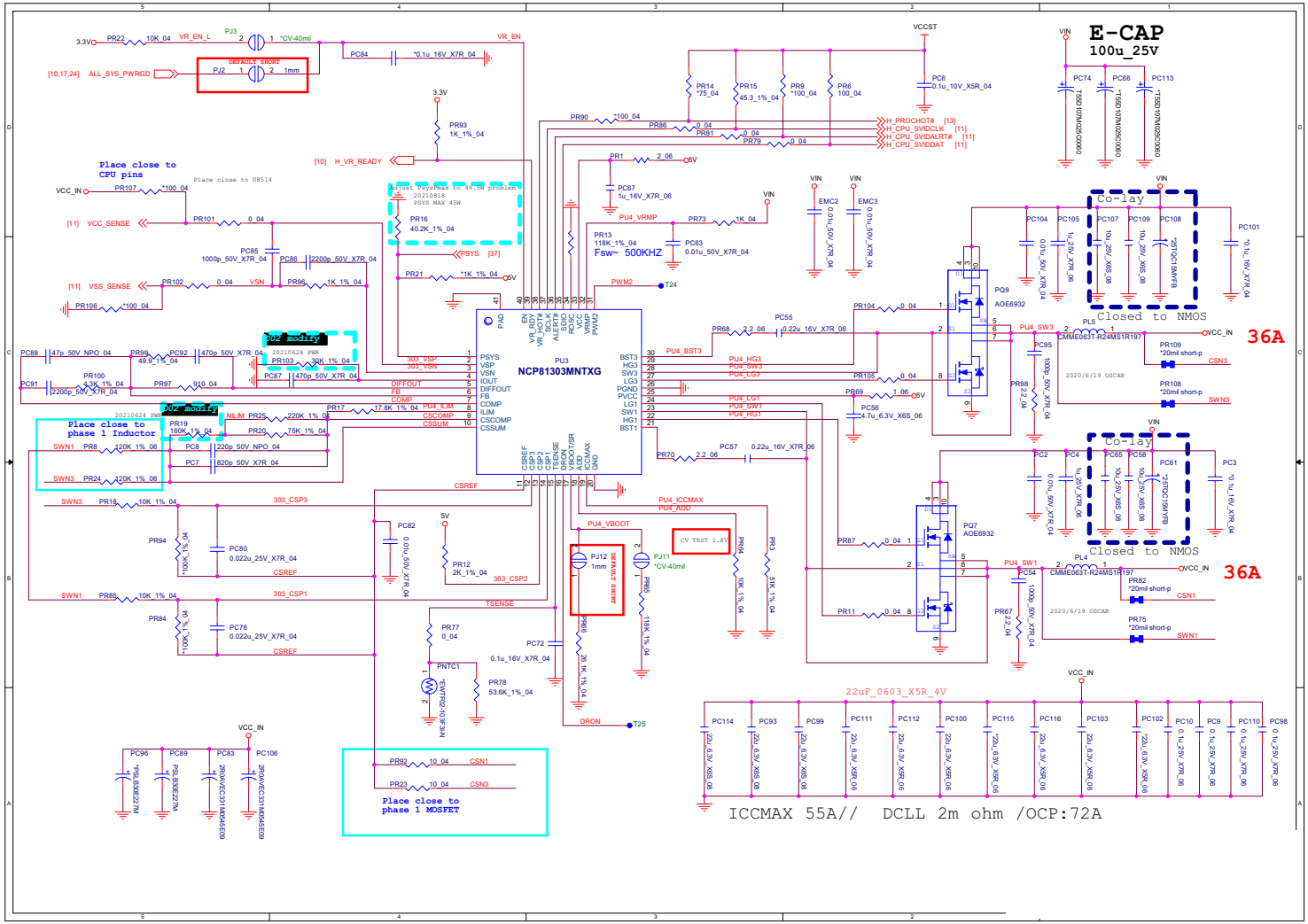

Sheet 38 of 47
VCCIN

RTL8411B

Sheet 39 of 47
LAN I219-LM

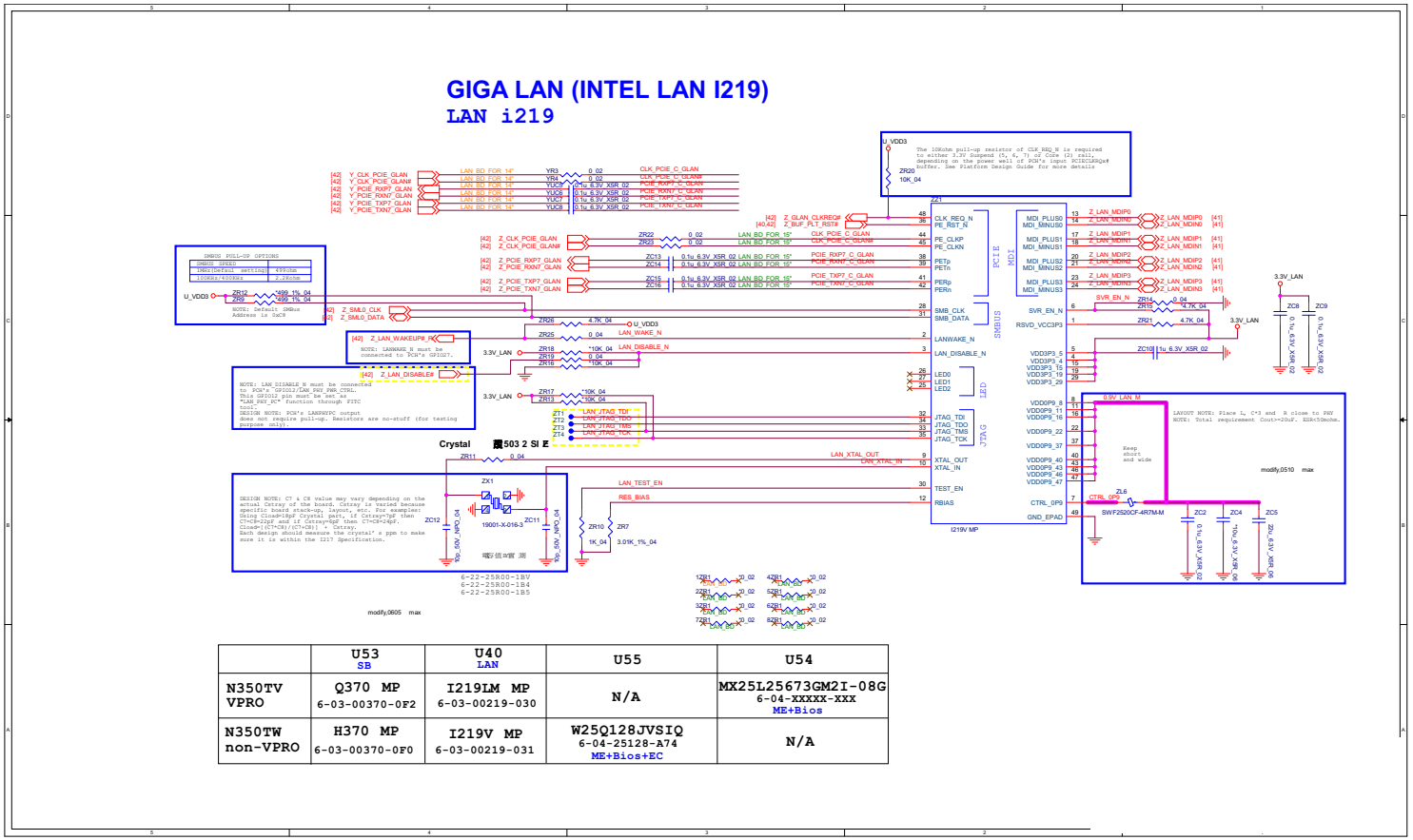

	U53 SB	U40 LAN	U55	U54
N350TV VPRO	Q370 MP 6-03-00370-0F2	I219LM MP 6-03-00219-030	N/A	MX25L25673GM2I-08G 6-04-XXXXX-XXX ME+Bios
N350TW non-VPRO	H370 MP 6-03-00370-0F0	I219V MP 6-03-00219-031	W25Q128JVSIQ 6-04-25128-A74 ME+Bios+EC	N/A

Multi Board RTS5227S / OZ711

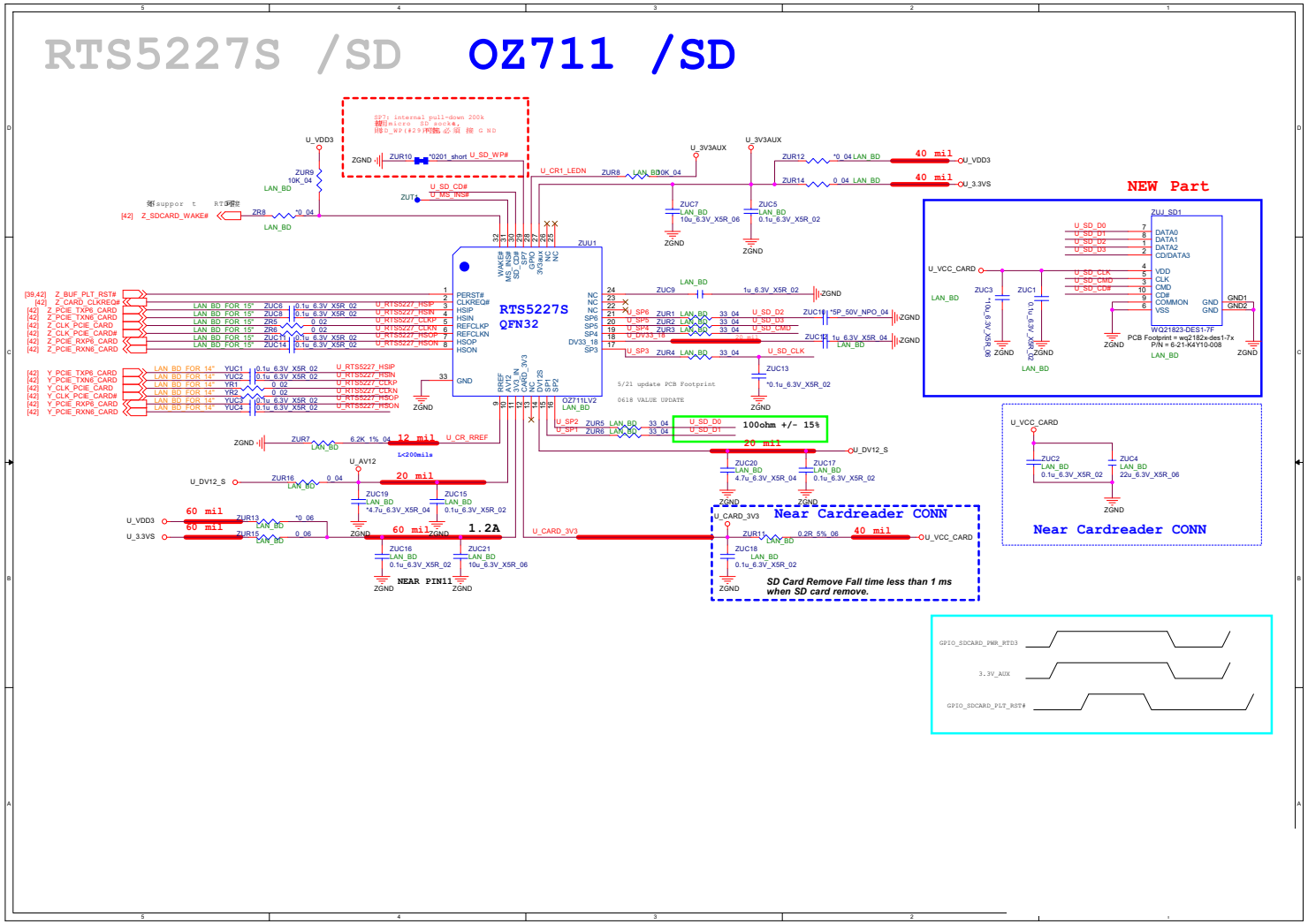

Sheet 40 of 47
Multi Board
RTS5227S / OZ711

LAN Transformer

Sheet 41 of 47
LAN Transformer

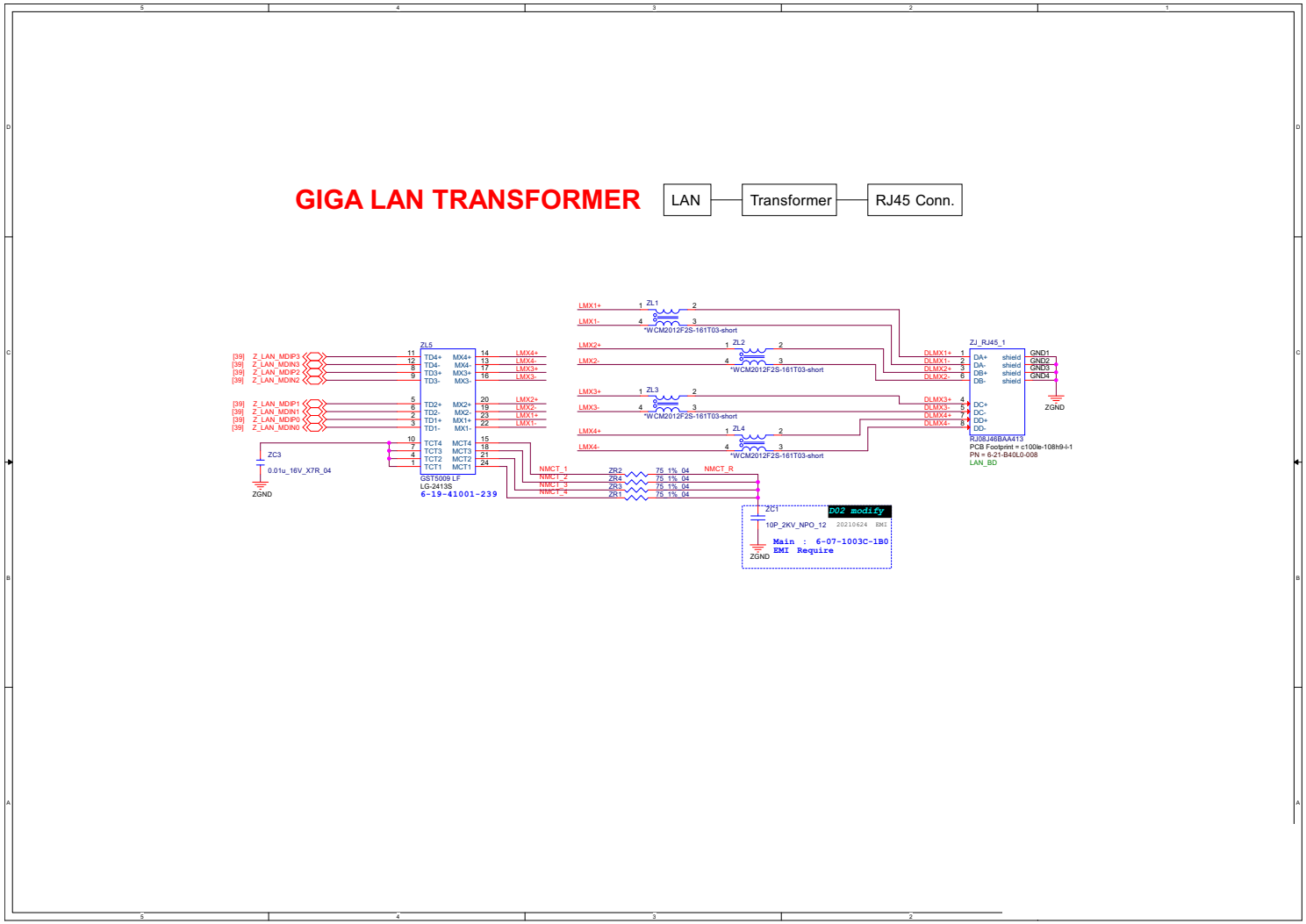

LAN Board Connector

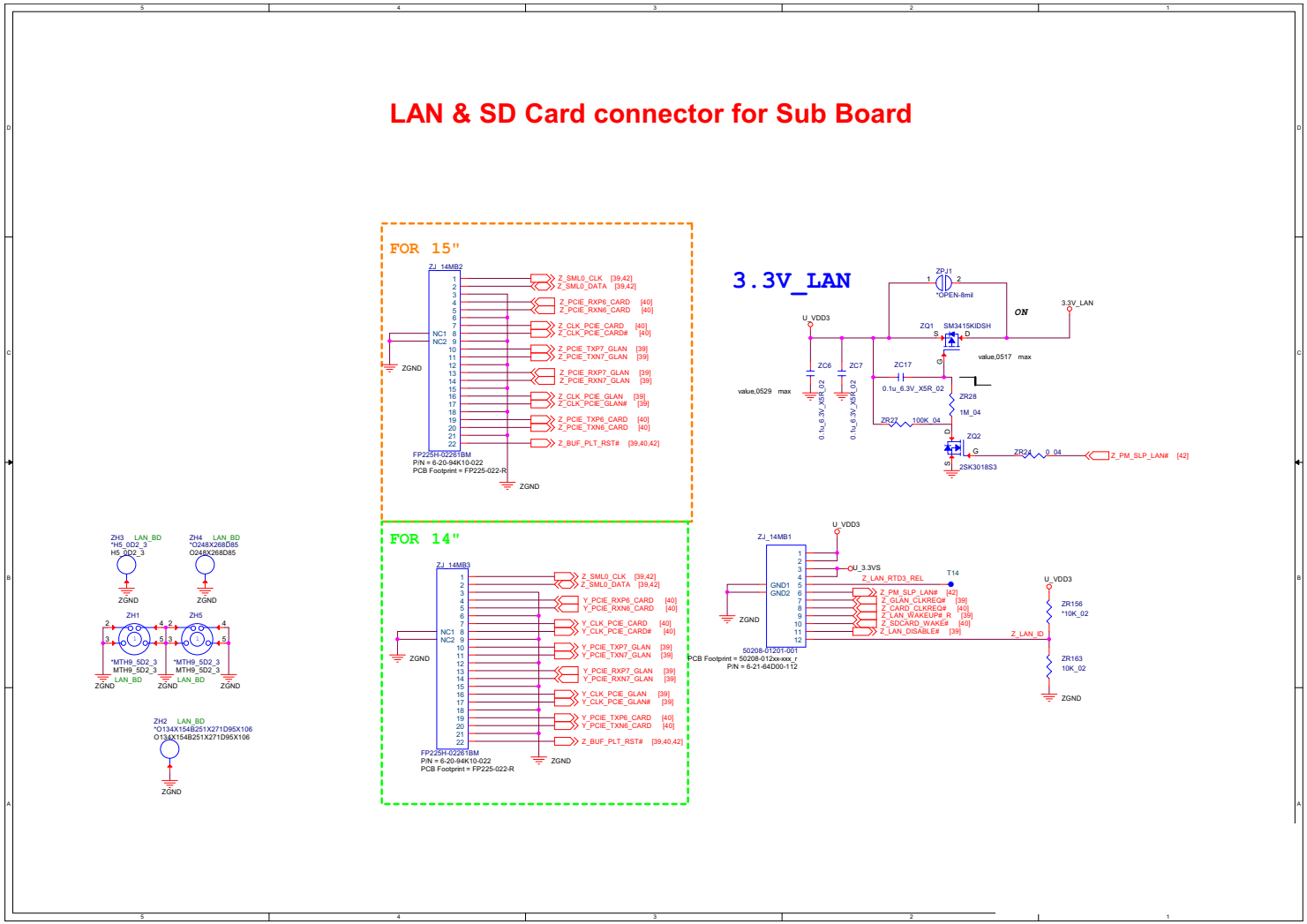

Sheet 42 of 47
LAN Board
Connector

B.Schematic Diagrams

14” I/O Board

Sheet 43 of 47
14” I/O Board

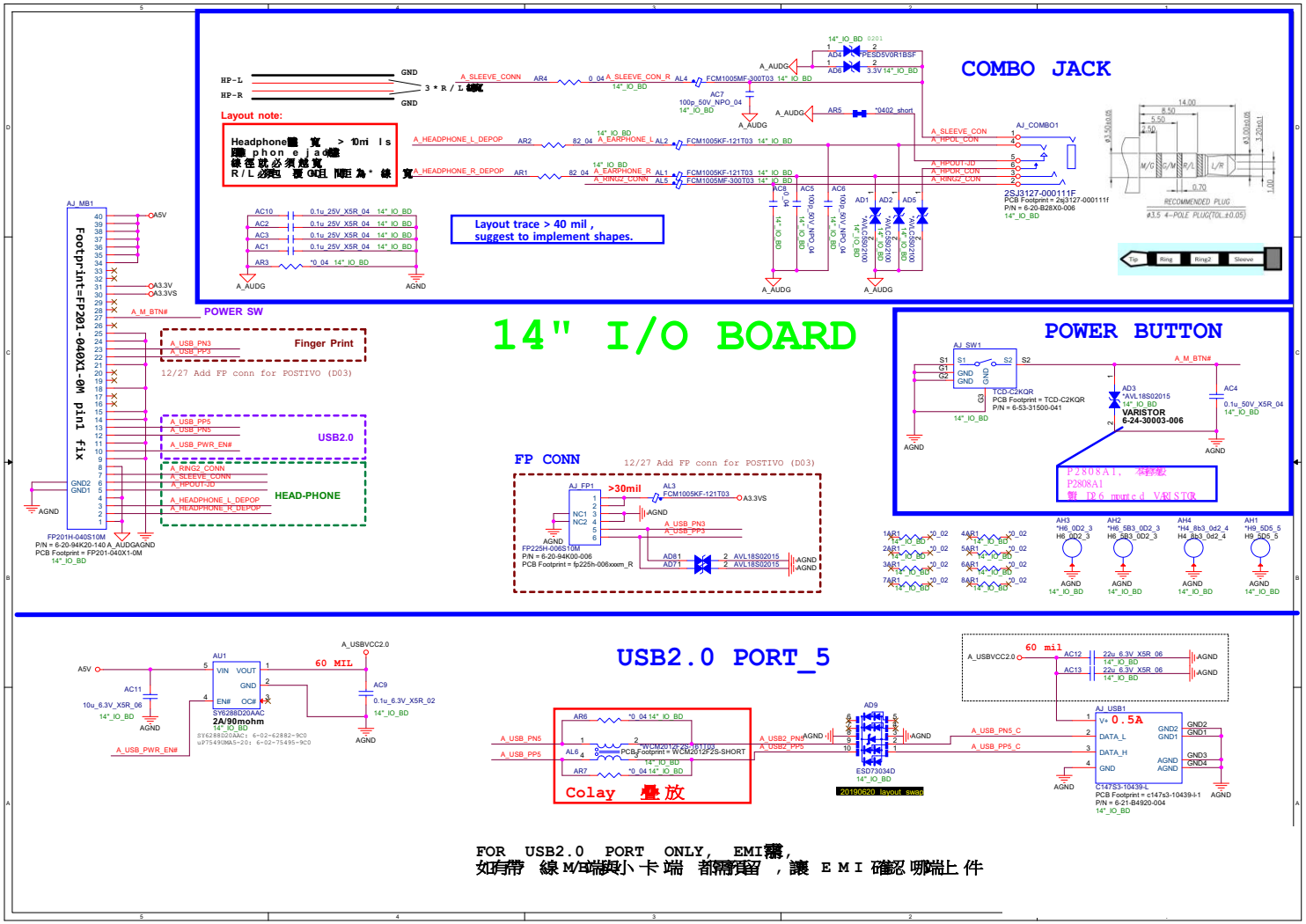

15” I/O Board 1

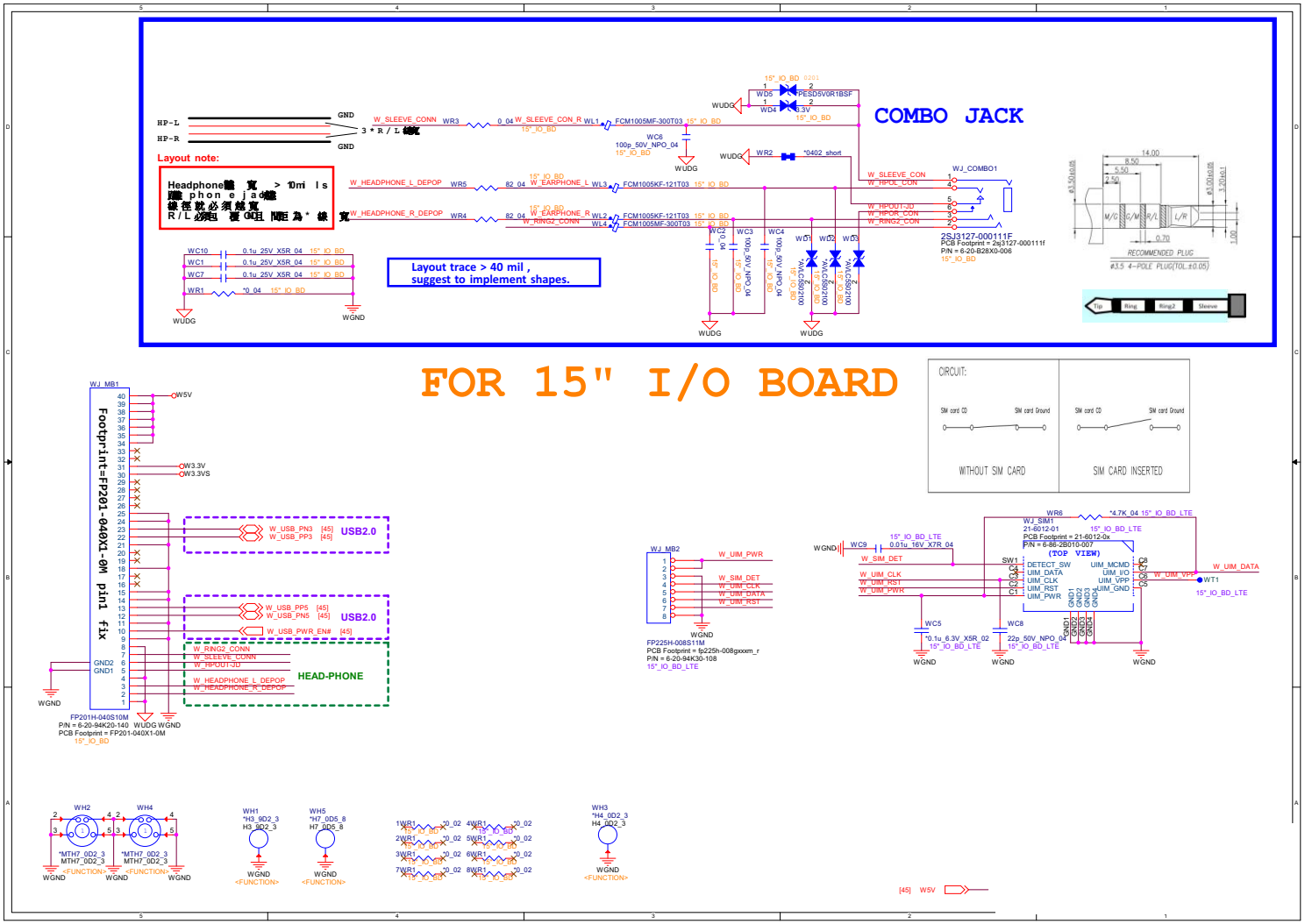

Sheet 44 of 47
15” I/O Board 1

15” I/O Board 2

Sheet 45 of 47
15” I/O Board 2

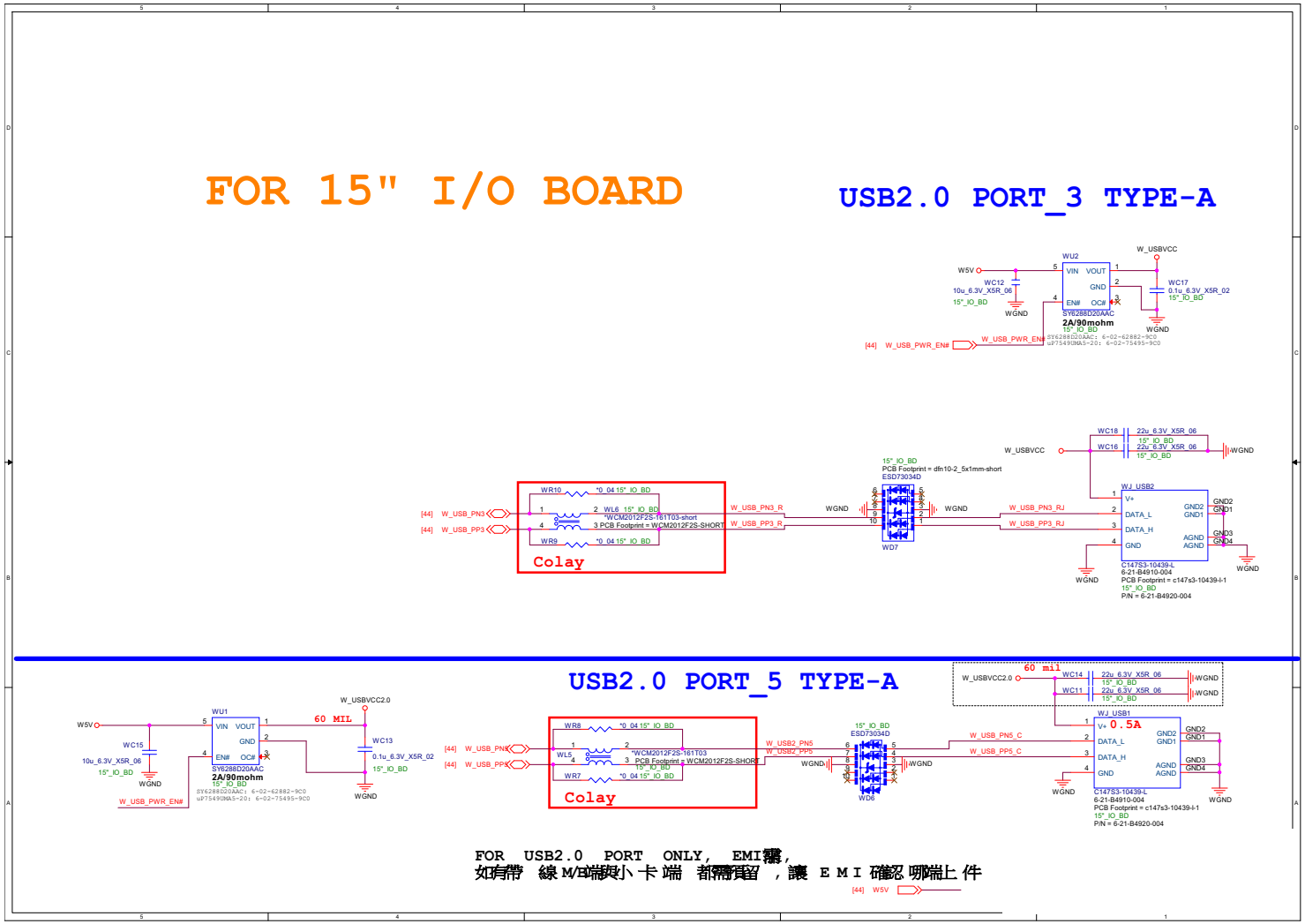

PWR Button Board

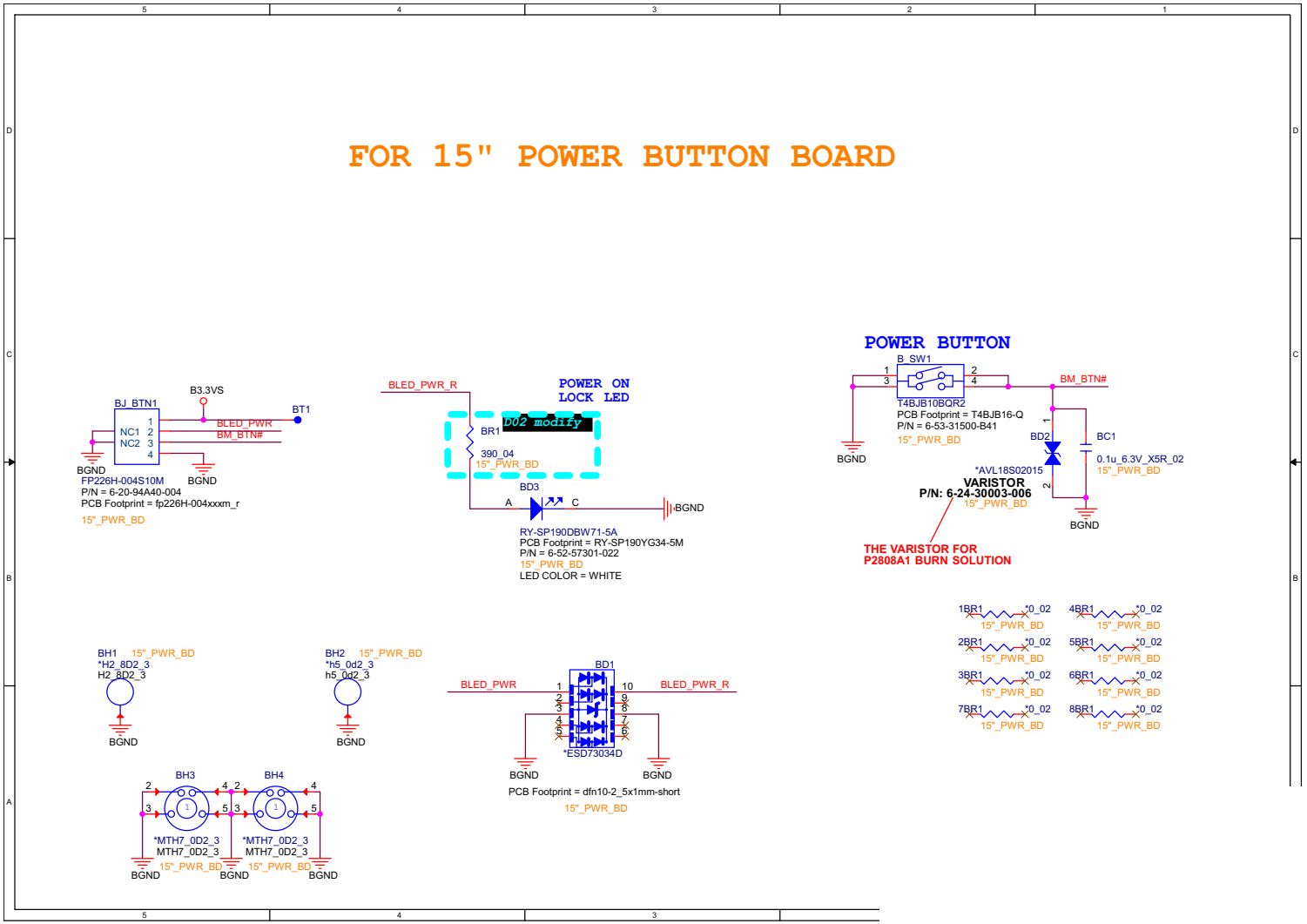

Sheet 46 of 47
PWR Button Board

Power Sequence
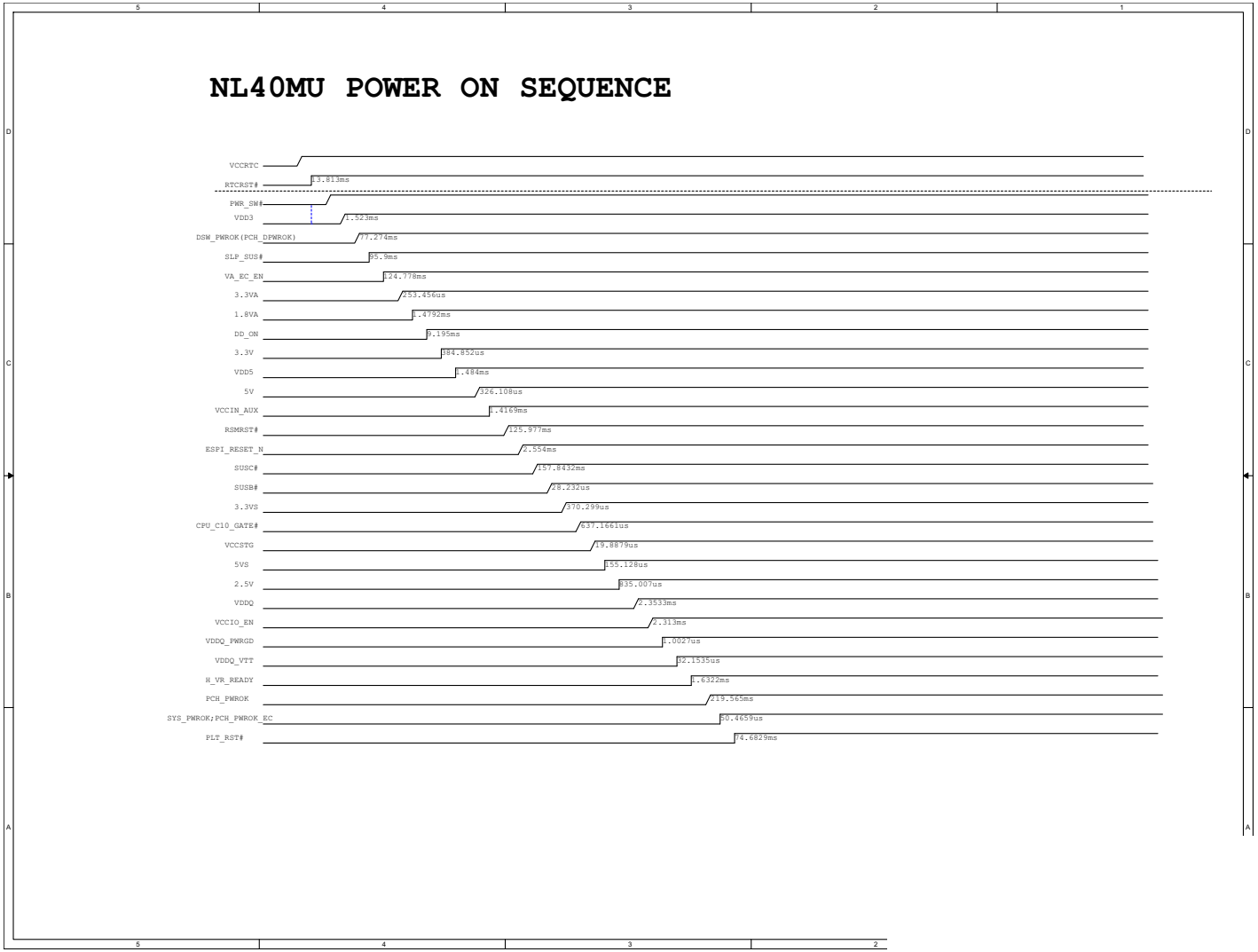
Sheet 47 of 47
Power Sequence