SERVICE MANUAL

NP70HH / NP70HJ / NP70HK

notebook

Notebook Computer

NP70HH / NP70HJ / NP70HK

Service Manual

Notice

The company reserves the right to revise this publication or to change its contents without notice. Information contained herein is for reference only and does not constitute a commitment on the part of the manufacturer or any subsequent vendor. They assume no responsibility or liability for any errors or inaccuracies that may appear in this publication nor are they in anyway responsible for any loss or damage resulting from the use (or misuse) of this publication.

This publication and any accompanying software may not, in whole or in part, be reproduced, translated, transmitted or reduced to any machine readable form without prior consent from the vendor, manufacturer or creators of this publication, except for copies kept by the user for backup purposes.

Brand and product names mentioned in this publication may or may not be copyrights and/or registered trademarks of their respective companies. They are mentioned for identification purposes only and are not intended as an endorsement of that product or its manufacturer.

Version 1.0
June 2021

Trademarks

Intel and Intel Core are trademarks of Intel Corporation.
Windows® is a registered trademark of Microsoft Corporation.
Other brand and product names are trademarks and /or registered trademarks of their respective companies.

HDMI™
HIGH-DEFINITION MULTIMEDIA INTERFACE

About this Manual

This manual is intended for service personnel who have completed sufficient training to undertake the maintenance and inspection of personal computers.

It is organized to allow you to look up basic information for servicing and/or upgrading components of the ***NP70HH / NP70HJ / NP70HK*** series notebook PC.

The following information is included:

Chapter 1, Introduction, provides general information about the location of system elements and their specifications.
Chapter 2, Disassembly, provides step-by-step instructions for disassembling parts and subsystems and how to upgrade elements of the system.

Appendix A, Part Lists
Appendix B, Schematic Diagrams

IMPORTANT SAFETY INSTRUCTIONS

Follow basic safety precautions, including those listed below, to reduce the risk of fire, electric shock and injury to persons when using any electrical equipment:

1. Do not use this product near water, for example near a bath tub, wash bowl, kitchen sink or laundry tub, in a wet basement or near a swimming pool.
2. Avoid using a telephone (other than a cordless type) during an electrical storm. There may be a remote risk of electrical shock from lightning.
3. Do not use the telephone to report a gas leak in the vicinity of the leak.
4. Use only the power cord and batteries indicated in this manual. Do not dispose of batteries in a fire. They may explode. Check with local codes for possible special disposal instructions.
5. This product is intended to be supplied by a Listed Power Unit as follows:

- AC Input of 100 - 240V, 50 - 60Hz, DC Output of 19.5V, 6.15A (**120**W) or 19.5V, 7.7A (**150**W) minimum AC/DC Adapter.

FCC Statement

This device complies with Part 15 of the FCC Rules. Operation is subject to the following two conditions:
This device may not cause harmful interference.
This device must accept any interference received, including interference that may cause undesired operation.

Instructions for Care and Operation

The notebook computer is quite rugged, but it can be damaged. To prevent this, follow these suggestions:

1. **Don't drop it, or expose it to shock.** If the computer falls, the case and the components could be damaged.

Do not expose the computer to any shock or vibration. 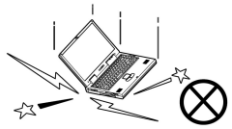	*Do not place it on an unstable surface.* 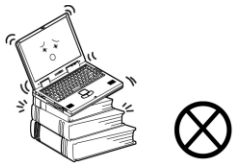	*Do not place anything heavy on the computer.* 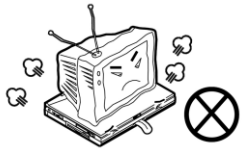

2. **Keep it dry, and don't overheat it.** Keep the computer and power supply away from any kind of heating element. This is an electrical appliance. If water or any other liquid gets into it, the computer could be badly damaged.

Do not expose it to excessive heat or direct sunlight. 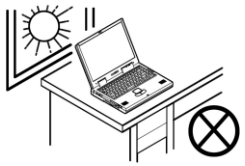	*Do not leave it in a place where foreign matter or moisture may affect the system.*	*Don't use or store the computer in a humid environment.* 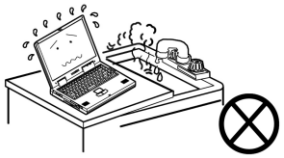	*Do not place the computer on any surface which will block the vents.* 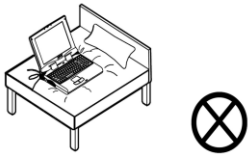

3. **Follow the proper working procedures for the computer**. Shut the computer down properly and don't forget to save your work. Remember to periodically save your data as data may be lost if the battery is depleted.

Do not turn off the power until you properly shut down all programs. 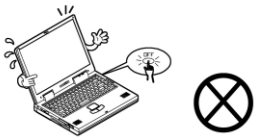	*Do not turn off any peripheral devices when the computer is on.* 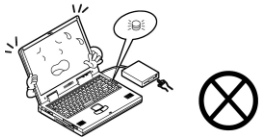	*Do not disassemble the computer by yourself.*	*Perform routine maintenance on your computer.*

4. **Avoid interference.** Keep the computer away from high capacity transformers, electric motors, and other strong magnetic fields. These can hinder proper performance and damage your data.
5. **Take care when using peripheral devices**.

Use only approved brands of peripherals. 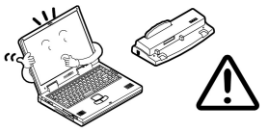	*Unplug the power cord before attaching peripheral devices.* 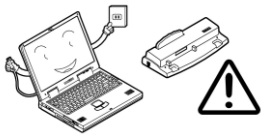

Power Safety

The computer has specific power requirements:

- Only use a power adapter approved for use with this computer.
- Your AC adapter may be designed for international travel but it still requires a steady, uninterrupted power supply. If you are unsure of your local power specifications, consult your service representative or local power company.
- The power adapter may have either a 2-prong or a 3-prong grounded plug. The third prong is an important safety feature; do not defeat its purpose. If you do not have access to a compatible outlet, have a qualified electrician install one.
- When you want to unplug the power cord, be sure to disconnect it by the plug head, not by its wire.
- Make sure the socket and any extension cord(s) you use can support the total current load of all the connected devices.
- Before cleaning the computer, make sure it is disconnected from any external power supplies.

Power Safety Warning

Before you undertake any upgrade procedures, make sure that you have turned off the power, and disconnected all peripherals and cables (including telephone lines and power cord). It is advisable to also remove your battery in order to prevent accidentally turning the machine on.

Do not plug in the power cord if you are wet.	*Do not use the power cord if it is broken.* 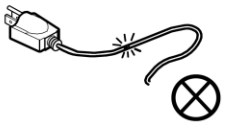	*Do not place heavy objects on the power cord.* 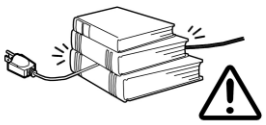

Battery Precautions

- Only use batteries designed for this computer. The wrong battery type may explode, leak or damage the computer.
- Do not continue to use a battery that has been dropped, or that appears damaged (e.g. bent or twisted) in any way. Even if the computer continues to work with a damaged battery in place, it may cause circuit damage, which may possibly result in fire.
- Recharge the batteries using the notebook's system. Incorrect recharging may make the battery explode.
- Do not try to repair a battery pack. Refer any battery pack repair or replacement to your service representative or qualified service personnel.
- Keep children away from, and promptly dispose of a damaged battery. Always dispose of batteries carefully. Batteries may explode or leak if exposed to fire, or improperly handled or discarded.
- Keep the battery away from metal appliances.
- Affix tape to the battery contacts before disposing of the battery.
- Do not touch the battery contacts with your hands or metal objects.

Battery Guidelines

The following can also apply to any backup batteries you may have.

- If you do not use the battery for an extended period, then remove the battery from the computer for storage.
- Before removing the battery for storage charge it to 60% - 70%.
- Check stored batteries at least every 3 months and charge them to 60% - 70%.

Battery Disposal

The product that you have purchased contains a rechargeable battery. The battery is recyclable. At the end of its useful life, under various state and local laws, it may be illegal to dispose of this battery into the municipal waste stream. Check with your local solid waste officials for details in your area for recycling options or proper disposal.

Caution

Danger of explosion if battery is incorrectly replaced. Replace only with the same or equivalent type recommended by the manufacturer. Discard used battery according to the manufacturer's instructions.

Battery Level

Click the battery icon in the taskbar to see the current battery level and charge status. A battery that drops below a level of 10% will not allow the computer to boot up. Make sure that any battery that drops below 10% is recharged within one week.

Related Documents

You may also need to consult the following manual for additional information:

User's Manual on CD/DVD

This describes the notebook PC's features and the procedures for operating the computer and its ROM-based setup program. It also describes the installation and operation of the utility programs provided with the notebook PC.

System Startup

1. Remove all packing materials.
2. Place the computer on a stable surface.
3. Securely attach any peripherals you want to use with the computer (e.g. keyboard and mouse) to their ports.
4. **When first setting up the computer use the following procedure** (as to safeguard the computer during shipping, the battery will be locked to not power the system until first connected to the AC/DC adapter and initially set up as below):
   - Attach the AC/DC adapter cord to the DC-In jack on the rear of the computer, then plug the AC power cord into an outlet, and connect the AC power cord to the AC/DC adapter. The battery will now be unlocked.
5. Use one hand to raise the lid/LCD to a comfortable viewing angle (do not exceed 130 degrees); use the other hand (as illustrated in Figure 1) to support the base of the computer (**Note**: **Never** lift the computer by the lid/LCD).
6. Press the power button to turn the computer "on".

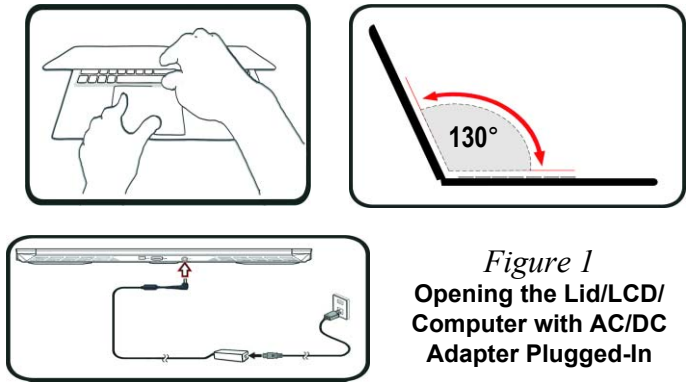

Figure 1
Opening the Lid/LCD/ Computer with AC/DC Adapter Plugged-In

Shut Down

Note that you should always shut your computer down by choosing the **Shut down** command in ***Windows*** (see below). This will help prevent hard disk or system problems.

1. Click the Start Menu icon .
2. Click the **Power** item .
3. Choose **Shut Down** from the menu.

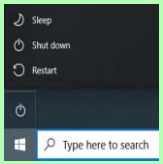

Contents

Introduction 1-1

Overview 1-1
Specifications 1-2
External Locator - Top View with LCD Panel Open 1-4
External Locator - Front & Right Side Views 1-5
External Locator - Left Side & Rear View 1-6
External Locator - Bottom View 1-7
Mainboard Overview - Top (Key Parts) 1-8
Mainboard Overview - Bottom (Key Parts) 1-9
Mainboard Overview - Top (Connectors) 1-10
Mainboard Overview - Bottom (Connectors) 1-11

Disassembly 2-1

Overview 2-1
Maintenance Tools 2-2
Connections 2-2
Maintenance Precautions 2-3
Disassembly Steps 2-4
Removing the Battery 2-5
Removing the Keyboard 2-7
Removing the Hard Disk Drive 2-8
Removing the M.2 SSD Module 2-10
Removing the System Memory (RAM) 2-13
Removing the Wireless LAN Module 2-14
Wireless LAN, Combo Module Cables 2-15

Part Lists A-1

Part List Illustration Location A-2
Top A-3
Bottom A-4
Main Board A-5
HDD A-6
LCD A-7

Schematic Diagrams.....B-1

System Block Diagram B-2
Processor 1/6 .....B-3
Processor 2/6 .....B-4
Processor 3/6 .....B-5
Processor 4/6 .....B-6
Processor 5/6 .....B-7
Processor 6/6 .....B-8
DDR4 CHA SO-DIMM_0 .....B-9
DDR4 CHB SO-DIMM_0 .....B-10
VGA PCI Express B-11
GPU Frame Buffer Partition B-12
Frame Buffer A B-13
Frame Buffer A B-14
Frame Buffer B B-15
Frame Buffer B B-16
VGA NVVDD Coupling B-17
Straps and XTAL B-18
IFP I/O Interface B-19
Misc - GPIO, I2C and VBIOS B-20
NVIDIA Power Sequence B-21
GPU NVVDD, FBVDDQ B-22
GPU GND B-23
mDP B-24
Panel, Inverter B-25
HDMI B-26
PCH 1/7 .....B-27
PCH 2/7 .....B-28

PCH 3/7 ..... B-29
PCH 4/7 ..... B-30
PCH 5/7 ..... B-31
PCH 6/7 ..... B-32
PCH 7/7 ..... B-33
Audio Codec B-34
M.2 WLAN+BT, PCIE 4X SSD B-35
Type-C & A B-36
Card Reader RTS5227S RTD3 ..... B-37
LAN RTL8111H RTD3 ..... B-38
HDD, Click TP, Audio B-39
LED, CCD, TPM, Power SW Bd. B-40
KBC-ITE IT5570 ..... B-41
RGB KB B-42
VDD3, VDD5 ..... B-43
1V8_RUN/AON, NV3V3, 3.3VA B-44
3V, 5V, 3VS, 5VS B-45
1.8V, 1.8VS, 1.8VA, C10 ..... B-46
VCCST, VCCSTG B-47
VNN / V1.05 ..... B-48
VCCIN B-49
VCCIN Output B-50
AC_In, Charger B-51
VCCIN AUX B-52
DDR 1.2V / 0.6VS, 2.5V B-53
NVVDD1 ..... B-54
NVVDD2 ..... B-55
PEX_VDD B-56
FBVDDQ B-57
OVRM B-58
Audio Board + Redriver B-59
LED Board B-60
Power SW Board B-61
17” LED Board B-62
Power Sequence B-63

Chapter 1: Introduction

Overview

This manual covers the information you need to service or upgrade the ***NP70HH / NP70HJ / NP70HK*** series notebook computer. Information about operating the computer (e.g. getting started, and the *Setup* utility) is in the *User's Manual*. Information about dri-vers (e.g. VGA & audio) is also found in the *User's Manual*. The manual is shipped with the computer.

Operating systems (e.g. *Windows 10,* etc.) have their own manuals as do application softwares (e.g. word processing and database programs). If you have questions about those programs, you should consult those manuals.

The ***NP70HH / NP70HJ / NP70HK*** series notebook is designed to be upgradeable. See ***Disassembly on page 2 - 1*** for a detailed description of the upgrade procedures for each specific component. Please take note of the warning and safety information indicated by the "" symbol.

The balance of this chapter reviews the computer's technical specifications and features.

Specifications

Latest Specification Information

The specifications listed here are correct at the time of sending them to the press. Certain items (particularly processor types/speeds) may be changed, delayed or updated due to the manufacturer's release schedule. Check with your service center for more details.

CPU Speed & Computer in DC Mode

Note that when the computer is in DC mode (powered by the battery only) the CPU may not run at full speed. This is a design feature implemented in order to protect the battery.

Processor Options

i7-11800H (2.30GHz), TDP 45W
i7-11600H (2.90GHz), TDP 45W
i5-11400H (2.70GHz), TDP 45W
i5-11260H (2.60GHz), TDP 45W

Core Logic

Intel® HM570 Express Chipset

LCD Options

LCD, 17.3" (43.94cm), 16:9, FHD (1920x1080)

BIOS

128Mb SPI Flash ROM
INSYDE BIOS

Memory

Dual Channel DDR4
Two 260 Pin SO-DIMM Sockets
Supporting up to **3200MHz DDR4** Memory
Memory Expandable up to **64GB**
Compatible with 8GB,16GB or 32GB Modules

(The real memory operating frequency depends on the FSB of the processor.)

Storage

One changeable 2.5" (6cm) 7.0mm (h) **SATA** (Serial) Hard Disk Drive/Solid State Drive (SSD)
(**Factory Option**) One M.2 **SATA/PCIe Gen3 x4** Solid State Drive (SSD)

Security

Security (Kensington® Type) Lock Slot
BIOS Password
Intel® PTT for Systems Without TPM Hardware
(**Factory Option**) TPM 2.0

Video Adapter Options

Microsoft Hybrid Graphics Mode
Supports up to 3 Active Displays

Intel Integrated GPU

Intel® UHD Graphics
Dynamic Frequency
Intel Dynamic Video Memory Technology
Microsoft DirectX®12 Compatible

NVIDIA® Discrete GPU

NVIDIA® GeForce GTX 1650 (NP70HH)
4GB GDDR6 Video RAM
Microsoft DirectX®12 Compatible
Supports PCIe x4

NVIDIA® GeForce RTX 3050 (NP70HJ)
4GB GDDR6 Video RAM
Microsoft DirectX®12 Compatible
Supports PCIe x4

NVIDIA® GeForce RTX 3050 Ti (NP70HK)
4GB GDDR6 Video RAM
Microsoft DirectX®12 Compatible
Supports PCIe x4

Pointing Device

Built-In Touchpad (with Microsoft PTP Multi Gesture & Scrolling Functionality)

Keyboard

Full-size **Multi-Color** LED Keyboard (with Numeric Keypad)

Audio

High Definition Audio Compliant Interface
Sound Blaster Cinema 6
Built-In Array Microphone
Two Speakers

Card Reader

Embedded Multi-In-1 Push-Push Card Reader
MMC (MultiMedia Card)/RS MMC
SD (Secure Digital)/Mini SD/SDHC/ SDXC

M.2 Slots

Slot 1 for **Combo WLAN and Bluetooth** Module
Slot 2 for **SATA** or **PCIe Gen3 x4 SSD**

Interface

One USB 2.0 Port
Two USB 3.2 Gen 1 Type-A Ports
One USB 3.2 Gen 2 Type-C Port*
**The maximum amount of current supplied by USB Type-C ports is 500mA (USB 2.0)/900mA (USB 3.2).*

One Mini DisplayPort 1.4
One HDMI-Out Port
One Microphone-In Jack
One 2- In-1 Audio Jack (Headphone and Microphone)
One RJ-45 LAN Jack
One DC-In Jack

Communication

Built-In 10/100/1000Mb Base-TX Ethernet LAN
1.0M HD Webcam

WLAN/ Bluetooth M.2 Modules:

(**Factory Option**) Intel® Dual Band Wi-Fi 6 AX200, 2x2 AX Wireless LAN + Bluetooth
(**Factory Option**) Intel® Dual Band Wi-Fi 6 AX201, 2x2 AX Wireless LAN + Bluetooth
(**Factory Option**) Intel® Dual Band Wi-Fi 5 Wireless-AC 9462, 1x1 AC Wireless LAN + Bluetooth

Environmental Spec

Temperature
Operating: 5°C - 35°C
Non-Operating: -20°C - 60°C
Relative Humidity
Operating: 20% - 80%
Non-Operating: 10% - 90%

Power

Embedded 4 Cell Polymer Battery Pack, 49WH

Full Range AC/DC Adapter
AC Input: 100 - 240V, 50 - 60Hz
DC Output: 19.5V, 6.15A (**120W**)
Or
DC Output: 19.5V, 7.7A (**150W**)

Dimensions & Weight

396.9mm (w) * 262mm (d) * 23.5mm (h)
2.39kg (Barebone with 49WH Battery)

External Locator - Top View with LCD Panel Open

Figure 1
Top View

1. Webcam
2. *Camera LED
   When the PC camera is in use, the LED will be illuminated.
3. Built-In Array Microphone
4. Display
5. Power Button
6. Vent
7. Keyboard
8. Touchpad & Buttons

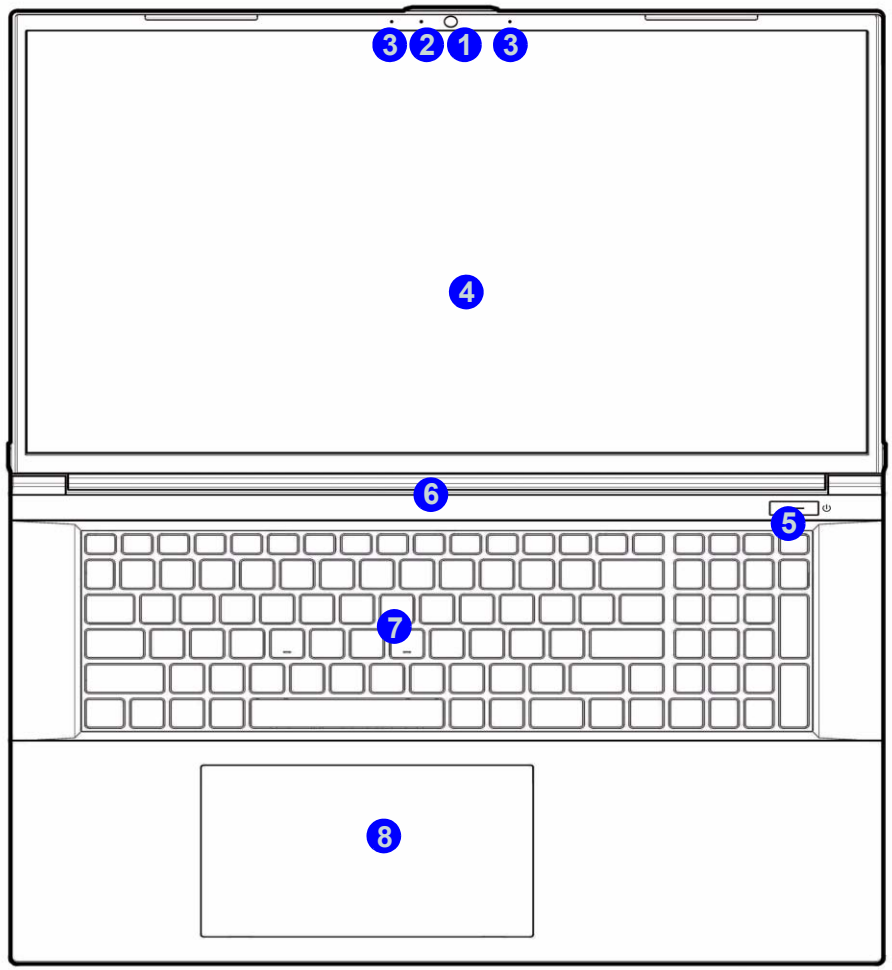

External Locator - Front & Right Side Views

FRONT VIEW

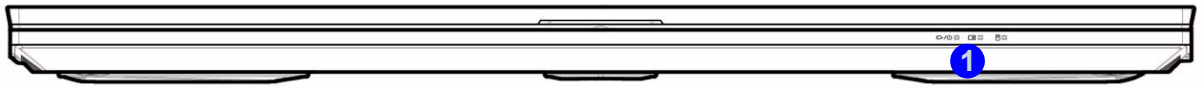

Figure 2
Front View

1. LED Indicators

RIGHT SIDE VIEW

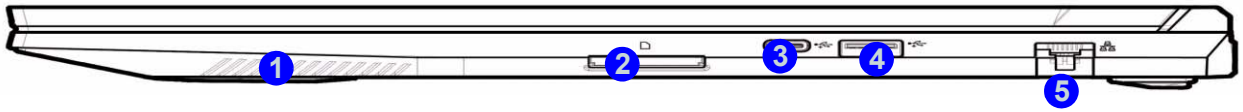

Figure 3
Right Side View

1. Speaker
2. Multi-in-1 Card Reader
3. USB 3.2 Gen 2 Type-C Port
4. USB 3.2 Gen 1 Type-A Port
5. RJ-45 LAN Jack

External Locator - Left Side & Rear View

Figure 4
Left Side View

1. Security Lock Slot
2. Vent
3. USB 3.2 Gen 1 Type-A Ports
4. USB 2.0 Port
5. Microphone-In Jack
6. 2-In-1 Audio Jack (Headphone and Microphone)
7. Speaker

LEFT SIDE VIEW

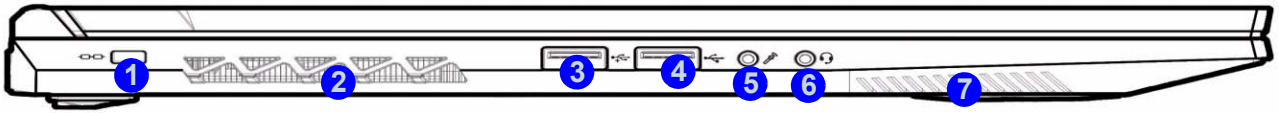

Figure 5
Rear View

1. Vent
2. Mini DisplayPort 1.4
3. HDMI-Out Port
4. DC-In Jack

REAR VIEW

External Locator - Bottom View

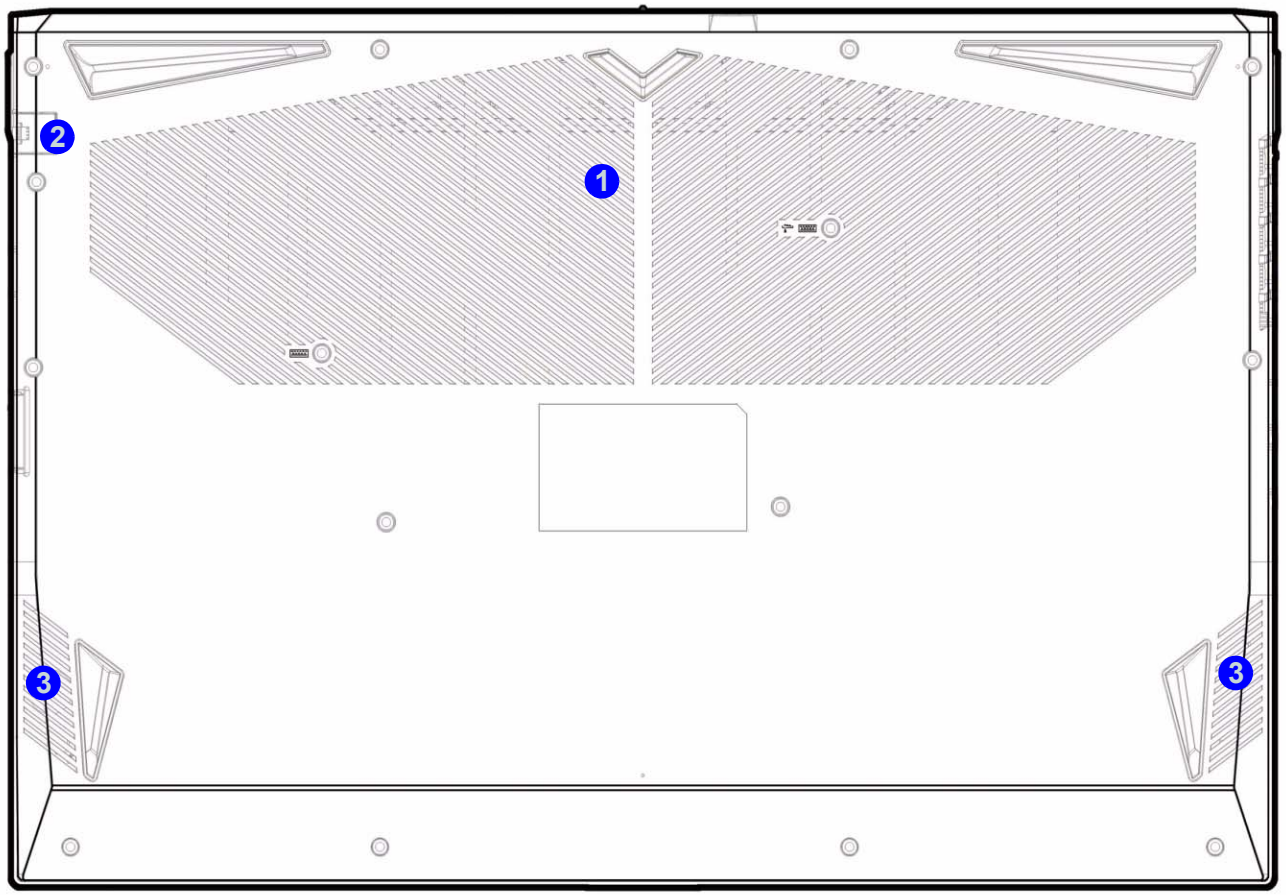

Figure 6
Bottom View

1. Vent
2. RJ-45 LAN Jack
3. Speakers

Overheating

To prevent your computer from overheating, make sure nothing blocks any vent while the computer is in use.

Figure 7
Mainboard Top Key Parts

Mainboard Overview - Top (Key Parts)

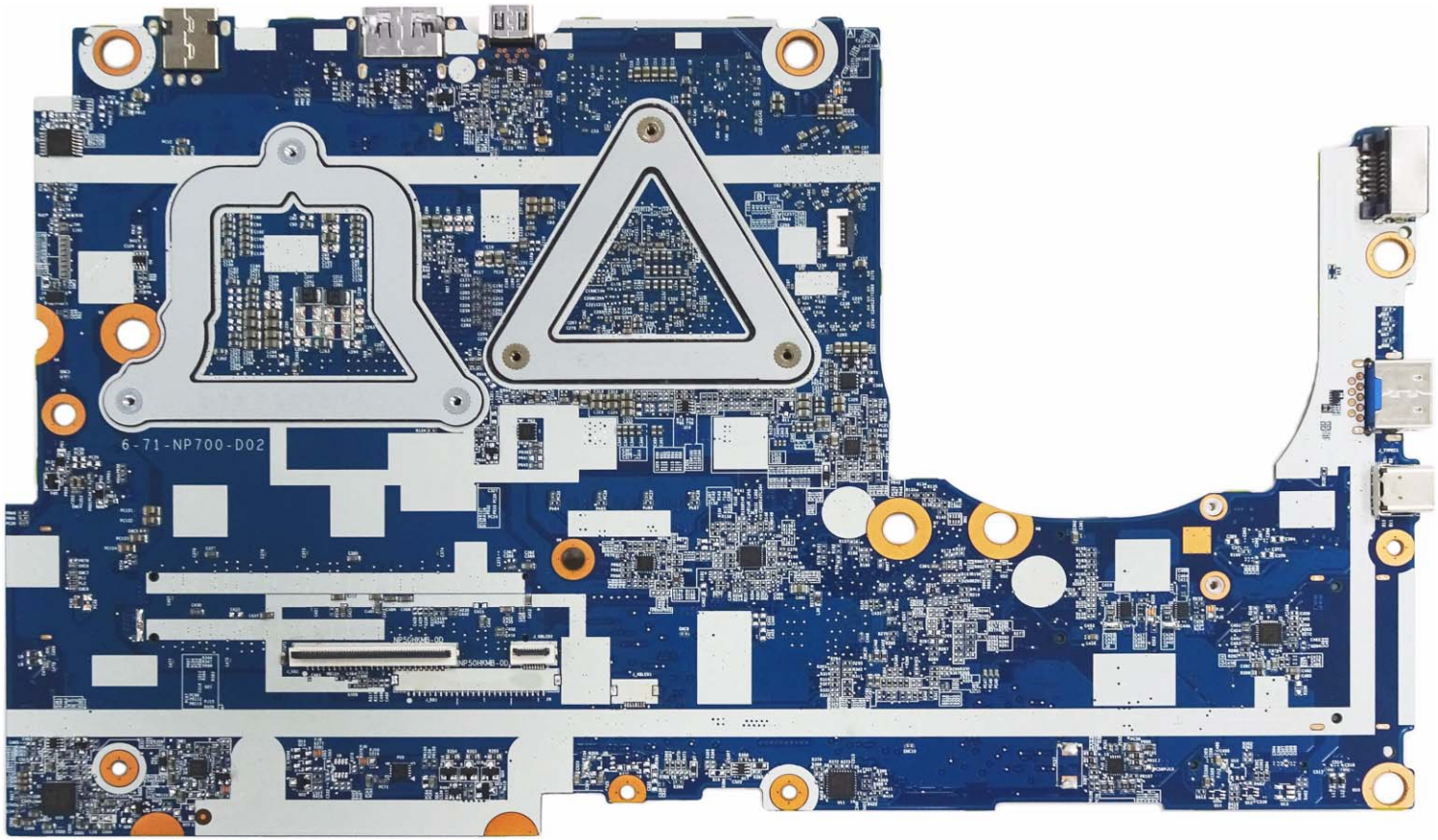

Mainboard Overview - Bottom (Key Parts)

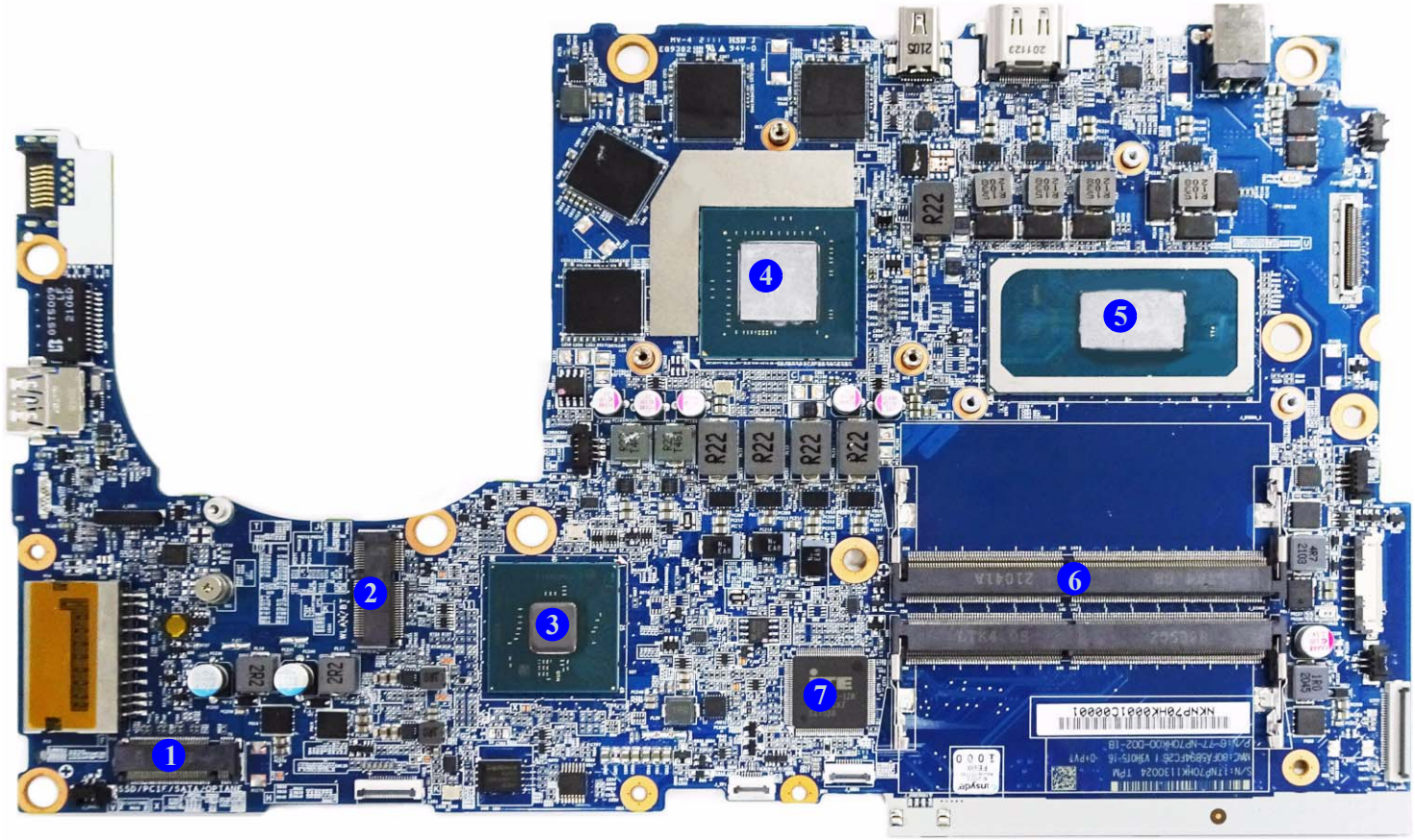

Figure 8
Mainboard Bottom Key Parts

1. Mini-Card Connector (M.2 SSD Module)
2. Mini-Card Connector (WLAN Module)
3. PCH
4. GPU
5. CPU
6. Memory Slots DDR4 SO-DIMM
7. KBC-ITE IT5570

Mainboard Overview - Top (Connectors)

Figure 9
Mainboard Top Connectors

1. DC-In Jack
2. HDMI Port
3. Mini Display Port
4. Keyboard Cable Connector
5. LED KB Connector
6. USB 3.2 Gen 2 Type-C Port
7. USB 3.2 Gen 1 Type-A Port
8. RJ-45 LAN Jack

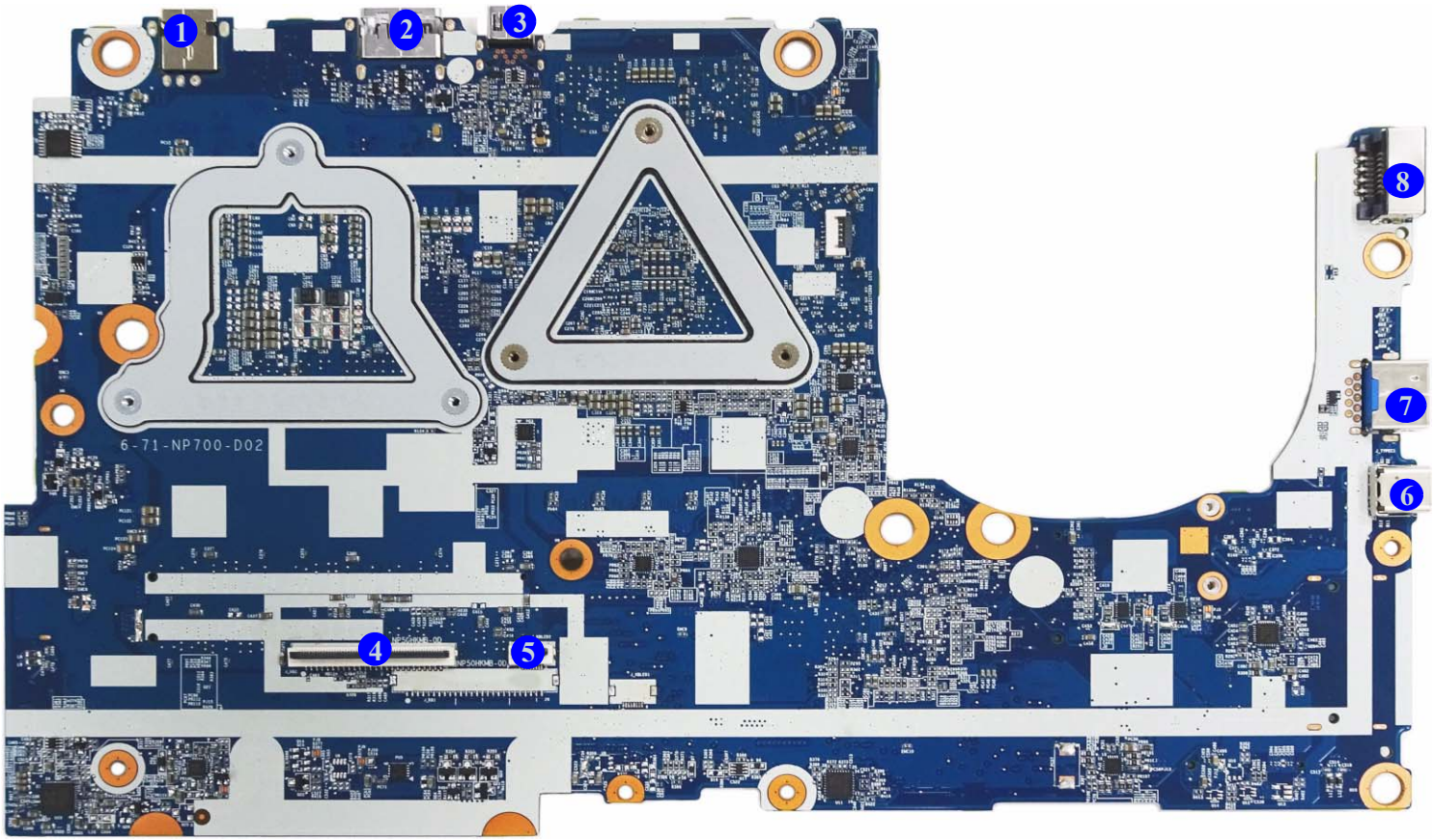

Mainboard Overview - Bottom (Connectors)

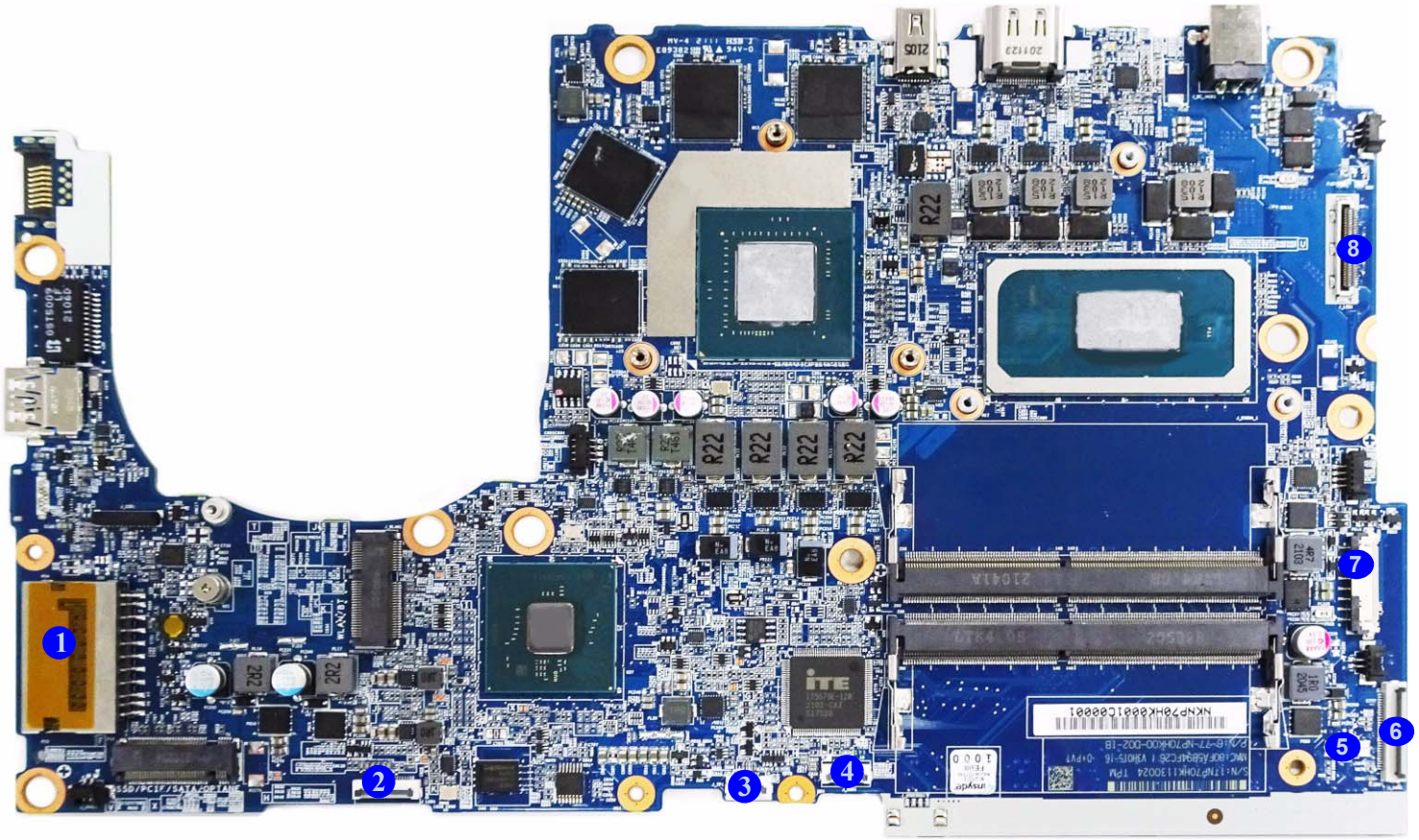

Figure 10
Mainboard Bottom Connectors

1. Multi-in-1 Card Reader
2. LED Connector
3. Clickpad Cable Connector
4. HDD Cable Connector
5. CMOS Battery Connector
6. Audio Connector
7. Battery Connector
8. LCD Connector

Chapter 2: Disassembly

Overview

This chapter provides step-by-step instructions for disassembling the ***NP70HH / NP70HJ / NP70HK*** series notebook's parts and subsystems. When it comes to reassembly, reverse the procedures (unless otherwise indicated).

We suggest you completely review any procedure before you take the computer apart.

Procedures such as upgrading/replacing the RAM, optical device and hard disk are included in the User's Manual but are repeated here for your convenience.

To make the disassembly process easier each section may have a box in the page margin. Information contained under the figure # will give a synopsis of the sequence of procedures involved in the disassembly procedure. A box with a lists the relevant parts you will have after the disassembly process is complete. **Note**: The parts listed will be for the disassembly procedure listed ONLY, and not any previous disassembly step(s) required. Refer to the part list for the previous disassembly procedure. The amount of screws you should be left with will be listed here also.

A box with a will also provide any possible helpful information. A box with a contains warnings.

An example of these types of boxes are shown in the sidebar.

Information

Warning

NOTE: All disassembly procedures assume that the system is turned **OFF**, and disconnected from any power supply (the battery is removed too).

Maintenance Tools

The following tools are recommended when working on the notebook PC:

- M3 Philips-head screwdriver
- M2.5 Philips-head screwdriver (magnetized)
- M2 Philips-head screwdriver
- Small flat-head screwdriver
- Pair of needle-nose pliers
- Anti-static wrist-strap

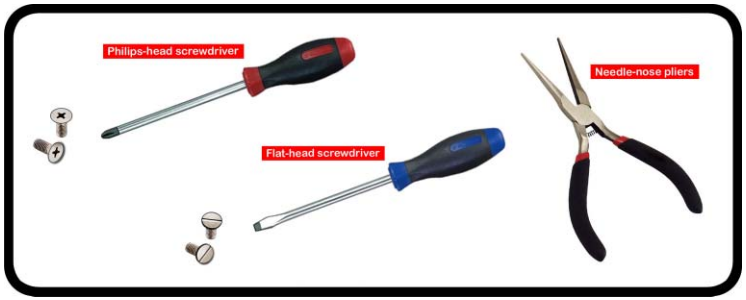

Connections

Connections within the computer are one of four types:

Locking collar sockets for ribbon connectors	To release these connectors, use a small flat-head screwdriver to gently pry the locking collar away from its base. When replacing the connection, make sure the connector is oriented in the same way. The pin1 side is usually not indicated.
Pressure sockets for multi-wire connectors	To release this connector type, grasp it at its head and gently rock it from side to side as you pull it out. Do not pull on the wires themselves. When replacing the connection, do not try to force it. The socket only fits one way.
Pressure sockets for ribbon connectors	To release these connectors, use a small pair of needle-nose pliers to gently lift the connector away from its socket. When replacing the connection, make sure the connector is oriented in the same way. The pin1 side is usually not indicated.
Board-to-board or multi-pin sockets	To separate the boards, gently rock them from side to side as you pull them apart. If the connection is very tight, use a small flat-head screwdriver - use just enough force to start.

Maintenance Precautions

The following precautions are a reminder. To avoid personal injury or damage to the computer while performing a removal and/or replacement job, take the following precautions:

1. **Don't drop it**. Perform your repairs and/or upgrades on a stable surface. If the computer falls, the case and other components could be damaged.
2. **Don't overheat it**. Note the proximity of any heating elements. Keep the computer out of direct sunlight.
3. **Avoid interference**. Note the proximity of any high capacity transformers, electric motors, and other strong magnetic fields. These can hinder proper performance and damage components and/or data. You should also monitor the position of magnetized tools (i.e. screwdrivers).
4. **Keep it dry**. This is an electrical appliance. If water or any other liquid gets into it, the computer could be badly damaged.
5. **Be careful with power**. Avoid accidental shocks, discharges or explosions.
   •Before removing or servicing any part from the computer, turn the computer off and detach any power supplies.
   •When you want to unplug the power cord or any cable/wire, be sure to disconnect it by the plug head. Do not pull on the wire.
6. **Peripherals** – Turn off and detach any peripherals.
7. **Beware of static discharge**. ICs, such as the CPU and main support chips, are vulnerable to static electricity. Before handling any part in the computer, discharge any static electricity inside the computer. When handling a printed circuit board, do not use gloves or other materials which allow static electricity buildup. We suggest that you use an anti-static wrist strap instead.
8. **Beware of corrosion**. As you perform your job, avoid touching any connector leads. Even the cleanest hands produce oils which can attract corrosive elements.
9. **Keep your work environment clean**. Tobacco smoke, dust or other air-born particulate matter is often attracted to charged surfaces, reducing performance.
10. **Keep track of the components**. When removing or replacing any part, be careful not to leave small parts, such as screws, loose inside the computer.

Power Safety Warning

Before you undertake any upgrade procedures, make sure that you have turned off the power, and disconnected all peripherals and cables (including telephone lines and power cord). It is advisable to also remove your battery in order to prevent accidentally turning the machine on.

Cleaning

Do not apply cleaner directly to the computer, use a soft clean cloth.
Do not use volatile (petroleum distillates) or abrasive cleaners on any part of the computer.
(For Computer Models Supplied with Light Blue Cleaning Cloth) Some computer models in this series come supplied with a light blue cleaning cloth. To clean the computer case with this cloth follow the instructions below.

- Power off the computer and peripherals.
- Disconnect the AC/DC adapter from the computer.
- Use a little water to dampen the cloth slightly.
- Clean the computer case with the cloth.
- Dry the computer with a dry cloth, or allow it time to dry before turning on.
- Reconnect the AC/DC adapter and turn the computer on.

Disassembly Steps

The following table lists the disassembly steps, and on which page to find the related information. **PLEASE PERFORM THE DISASSEMBLY STEPS IN THE ORDER INDICATED.**

To remove the Battery:

1. Remove the battery *page 2 - 5*

To remove the Keyboard:

1. Remove the battery *page 2 - 5*
2. Remove the keyboard *page 2 - 7*

To remove the HDD:

1. Remove the battery *page 2 - 5*
2. Remove the HDD *page 2 - 8*

To remove and install the M.2 SSD:

1. Remove the battery *page 2 - 5*
2. Remove the M.2 SSD-1 *page 2 - 10*
3. Remove the M.2 SSD-2 *page 2 - 11*
4. Remove the HDD *page 2 - 8*
5. Install the M.2 SSD-2 *page 2 - 12*

To remove the System Memory:

1. Remove the battery *page 2 - 5*
2. Remove the system memory *page 2 - 13*

To remove the Wireless LAN Module:

1. Remove the battery *page 2 - 5*
2. Remove the WLAN *page 2 - 14*

Removing the Battery

1. Turn **off** the computer, turn it over.
2. Remove screws 1 - 14 from the bottom case (***Figure 1a***).
3. Carefully lift the bottom case 15 up in the direction of the arrow at point 16 and remove it (***Figure 1b***).

Figure 1
Battery Removal

a. Remove the screws.
b. Remove the bottom case.

a.

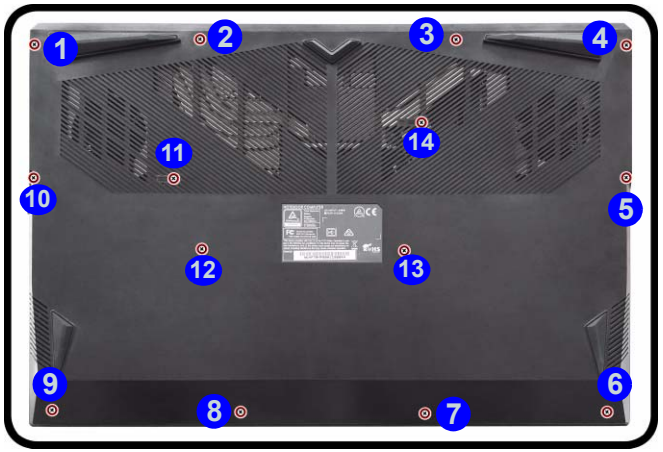

b.

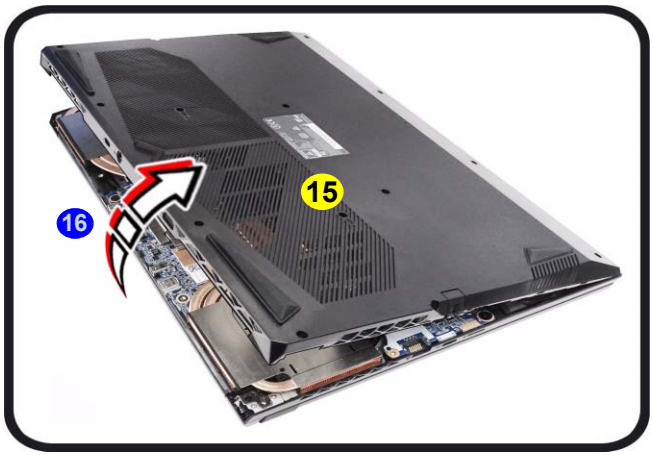

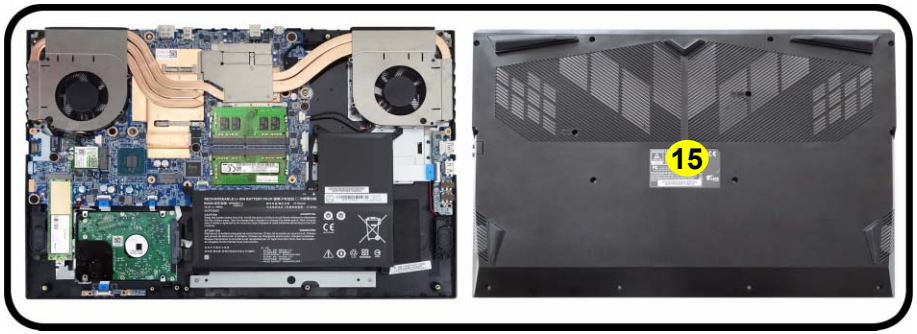

15. Bottom Case

- 14 Screws

Figure 2
Battery Removal (cont'd.)

c. Locate the battery.
d. Disconnect the cable and remove the screws.
e. Lift the battery off the computer.

4. The battery will be visible at point 17 on the computer (***Figure 2c***).
5. Carefully disconnect the cable 18, then remove screws 19 - 23 (***Figure 2d***).
6. Lift the battery 24 off the computer (***Figure 2e***).
7. Reverse the process to install a new battery (do not forget to replace all the screws and the bottom cover).

c.

d.

e.

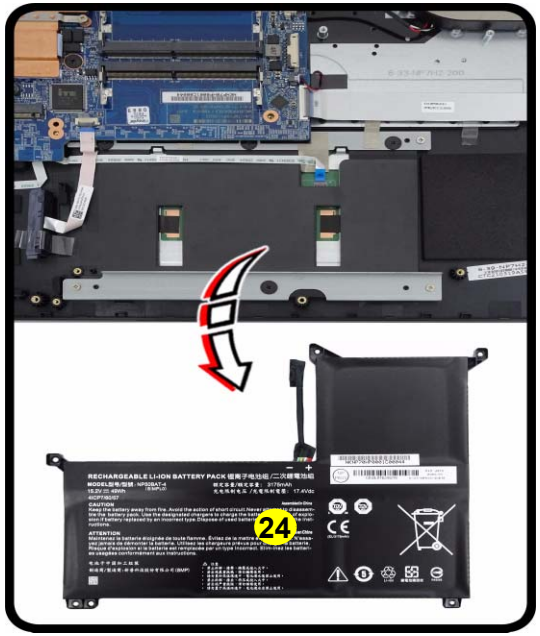

24. Battery

- 5 Screws

Removing the Keyboard

1. Turn **off** the computer, turn it over and remove the battery (*page 2 - 5*).
2. Remove screws 1 - 2 from the bottom of the computer.
3. Open it up with the LCD on a flat surface before pressing at point 3 to release the keyboard module (use the special eject stick 4 to do this) while releasing the keyboard in the direction of the arrow 5 as shown (*Figure 3a*).
4. Carefully lift the keyboard 6 up, being careful not to bend the keyboard ribbon cable 7. Disconnect the keyboard ribbon cable 7 from the locking collar socket by using a flat-head screwdriver to pry the locking collar pins 8 away from the base (*Figure 3b*).
5. Carefully lift the keyboard 6 off the computer (*Figure 3c*).

a.

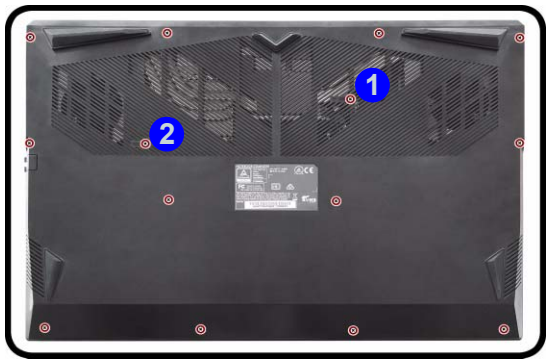

b.

c.

Figure 3
Keyboard Removal

a. Remove the screws from the bottom of the computer and then eject the keyboard using a special eject stick to push the keyboard out while releasing the keyboard as shown.
b. Lift the keyboard up and disconnect the keyboard ribbon cable from the locking collar socket.
c. Remove the keyboard.

Re-inserting the Keyboard

When re-inserting the keyboard firstly, align the keyboard tabs at the bottom of the keyboard with the slots in the case.

4. Eject Stick
6. Keyboard

- 2 Screws

Figure 4
HDD Assembly Removal

a. Locate the HDD.
b. Remove the screw.

Removing the Hard Disk Drive

The hard disk drive can be taken out to accommodate other 2.5" serial (SATA) hard disk drives with a height of 7mm (h). Follow your operating system's installation instructions, and install all necessary drivers and utilities (as outlined in **Chapter 4 of the User's Manual**) when setting up a new hard disk.

Hard Disk Disassembly Process

1. Turn **off** the computer, and remove the battery (***page 2 - 5***) and SSD (***page 2 - 10***).
2. The HDD will be visible at point 1 on the mainboard (***Figure 4a***).
3. Remove screws 2 from the HDD assembly (***Figure 4b***).

a.

b.

6. Hard Disk

- 1 Screw

HDD System Warning

New HDD's are blank. Before you begin make sure:

You have backed up any data you want to keep from your old HDD.

You have all the CD-ROMs and FDDs required to install your operating system and programs.

If you have access to the internet, download the latest application and hardware driver updates for the operating system you plan to install. Copy these to a removable medium.

4. Carefully lift and slightly slide the hard disk up.
5. Disconnect the hard disk assembly 3 from the connector 4 (*Figure 5c*).
6. Remove screws 5 - 6 and bracket 7 from the hard disk 8 (*Figure 5d*).
7. Reverse the process to install a new hard disk (do not forget to replace the screws).

c.

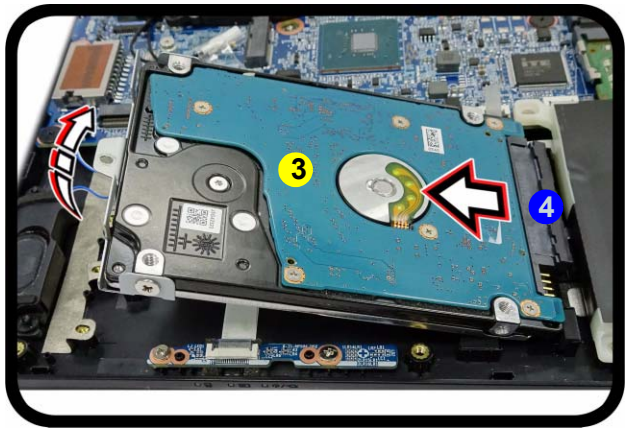

d.

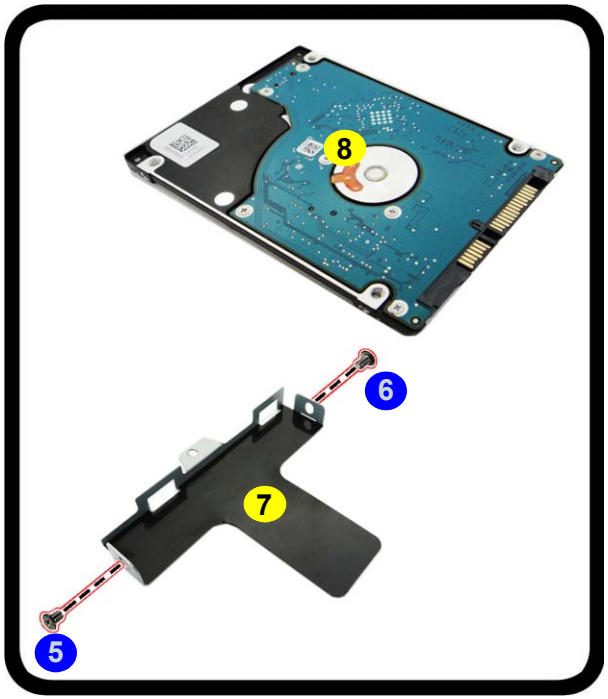

Figure 5
HDD Assembly Removal (cont'd.)

c. Slide and lift the HDD assembly to disconnect from the connector.
d. Remove the screws and bracket from the HDD.

3. HDD Assembly
7. HDD Bracket
8. HDD

- 2 Screws

Figure 6
M.2 SSD-1 Module Removal

a. Locate the M.2 SSD.
b. Remove the screw.
c. The M.2 SSD module will pop up.

Removing the M.2 SSD Module

M.2 SSD-1 Removal Procedure

1. Turn **off** the computer, turn it over, remove the battery (***page 2 - 5***).
2. The M.2 SSD module will be visible at point 1 on the mainboard (***Figure 6a***).
3. Remove the screw 2 (***Figure 6b***).
4. The M.2 SSD module 3 (***Figure 6c***) will pop-up, and you can remove it from the computer.
5. Reverse the process to install a new module (do not forget to replace the thermal pad, screws and bottom cover).

a.

Thermal Pad

Make sure to place the thermal pad's adhesive side down on the module's surface as illustrated.

b.

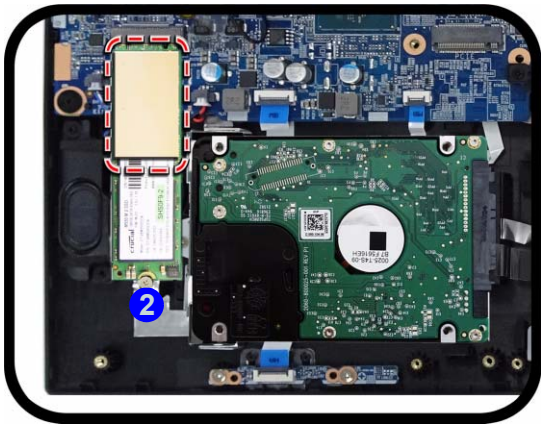

c.

3.M2 SSD Module SATA/PCIE

- 1 Screw

M.2 SSD-2 Removal Procedure

1. Turn **off** the computer, turn it over, remove the battery (*page 2 - 5*).
2. The M.2 SSD module will be visible at point 1 on the mainboard (*Figure 7a*).
3. Remove the screw 2 (*Figure 7b*).
4. The M.2 SSD module 3 (*Figure 7c*) will pop-up, and you can remove it from the computer.
5. Reverse the process to install a new module (do not forget to replace the thermal pad, screws and bottom cover).

Figure 7
M.2 SSD-2 Module Removal

a. Locate the M.2 SSD.
b. Remove the screw.
c. The M.2 SSD module will pop up.

a.

Thermal Pad

Make sure to place the thermal pad's adhesive side down on the module's surface as illustrated.

b.

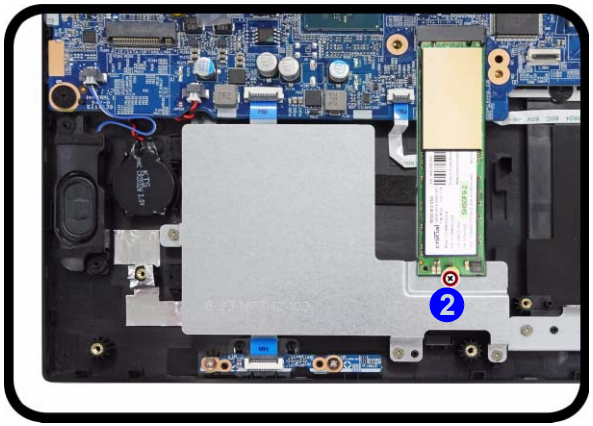

c.

3.M2 SSD Module PCIE only

- 1 Screw

Figure 8
M.2 SSD-2 Module Installation

a. Locate the M.2 SSD.
b. Remove the screw.
c. The M.2 SSD module will pop up.

M.2 SSD-2 Installation Procedure

1. Turn **off** the computer, turn it over, remove the battery (***page 2 - 5***) and hard disk (***page 2 - 8***).
2. Disconnect the HDD connector cable 1, (remove the screw 2 and HDD bracket 3 , if available) (***Figure 8a***).
3. Insert the SSD bracket 4 in place and tighten screws 5 - 7 (***Figure 8b***).
4. Insert the M.2 SSD module 8 (***Figure 6c***), and tighten the screw 9 (***Figure 8c***).

a.

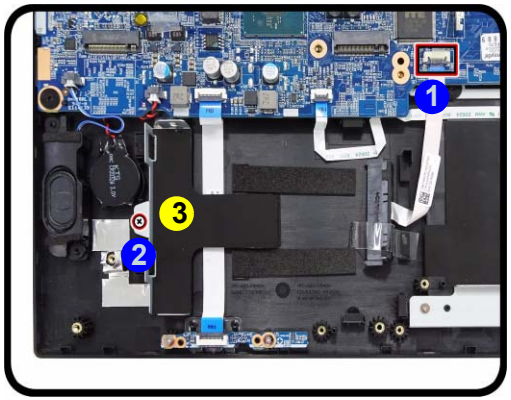

b.

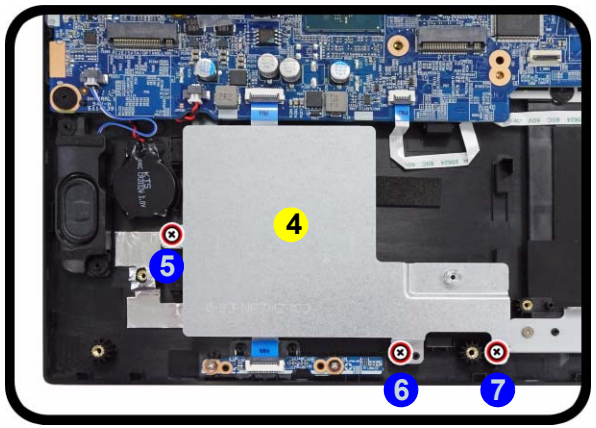

c.

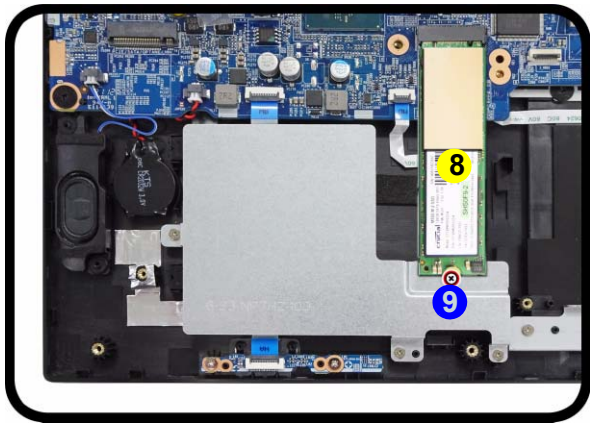

3.HDD Bracket
4.SSD Bracket

- 5 Screws

Removing the System Memory (RAM)

The computer has four memory sockets for 260 pin Small Outline Dual In-line Memory Modules (SO-DIMM) supporting DDR4 Up to 3200 MHz. The main memory can be expanded up to 32GB. The total memory size is automatically detected by the POST routine once you turn on your computer.

Memory Upgrade Process

1. Turn **off** the computer, turn it over, remove the battery (*page 2 - 5*).
2. The RAM-2 modules will be visible at point 1 on the mainboard (*Figure 9a*).
3. Gently pull the two release latches (2 & 3) on the sides of the memory socket in the direction indicated by the arrows (*Figure 9b*). The RAM module 4 will pop-up (*Figure 9c*), and you can then remove it.
4. Pull the latches to release the second module if necessary.
5. Insert a new module holding it at about a 30° angle and fit the connectors firmly into the memory slot.
6. The module will only fit one way as defined by its pin alignment. Make sure the module is seated as far into the slot as it will go. DO NOT FORCE IT; it should fit without much pressure.
7. Press the module in and down towards the mainboard until the slot levers click into place to secure the module.
8. Replace the bottom cover and the screws (see *page 2 - 5*).
9. Restart the computer to allow the BIOS to register the new memory configuration as it starts up.

a.

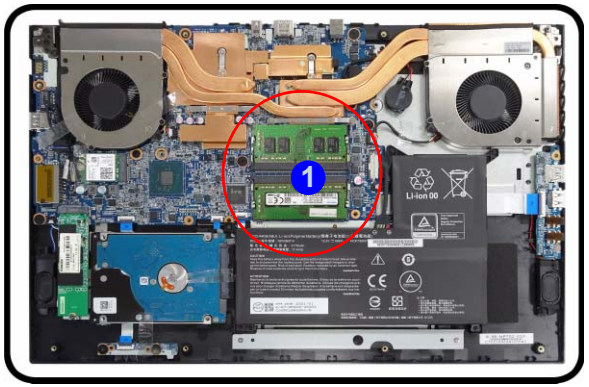

b.

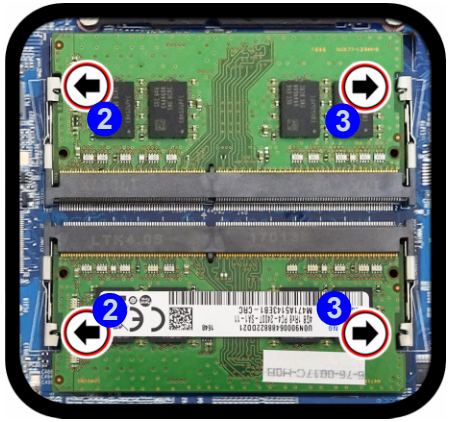

c.

Figure 9
RAM Module Removal

a. The RAM modules will be visible at point 1 on the mainboard.
b. Pull the release latches.
c. Remove the module.

Contact Warning

Be careful not to touch the metal pins on the module's connecting edge. Even the cleanest hands have oils which can attract particles, and degrade the module's performance.

4. RAM Module

Figure 10
Wireless LAN Module Removal

a. Locate the WLAN.
b. Remove the mylar. Disconnect the cables and remove the screw.
c. The WLAN module will pop up.

Note: Make sure you reconnect the antenna cable to the "1 + 2" socket (*Figure 10b*).

Removing the Wireless LAN Module

1. Turn **off** the computer, turn it over, remove the battery (*page 2 - 5*).
2. The Wireless LAN module will be visible at point 1 on the mainboard (*Figure 10a*).
3. Carefully remove the mylar 2, disconnect the cables 3 & 4, and then remove the screw 5 (*Figure 10b*)
4. The Wireless LAN module 6 (*Figure 10c*) will pop-up, and you can remove it from the computer.
5. Reverse the process to install a new module (do not forget to replace the mylar, screws and bottom cover).

a.

b.

c.

6.Wireless LAN Module

- 1 Screw

Wireless LAN, Combo Module Cables

Note that the cables for connecting to the antennae on WLAN, WLAN & Bluetooth Combo, and LTE modules are not labelled. The cables/covers (each cable will have either a black or transparent cable cover) are color coded for identification as outlined in the table below.

Module Type	Antenna Type	Cable Color	Cable Cover Type
WLAN/WLAN & Bluetooth Combo	WL 1	Black	Transparent
	WL 2	Black	White

Cable 1 is usually connected to antenna 1 on the module, and cable 2 to antenna 2.

Appendix A: Part Lists

This appendix breaks down the ***NP70HH / NP70HJ / NP70HK*** series notebook's construction into a series of illustrations. The component part numbers are indicated in the tables opposite the drawings.

Note: This section indicates the *manufacturer's* part numbers. Your organization may use a different system, so be sure to cross-check any relevant documentation.

Note: Some assemblies may have parts in common (especially screws). However, the part lists DO NOT indicate the total number of duplicated parts used.

Note: Be sure to check any update notices. The parts shown in these illustrations are appropriate for the system at the time of publication. Over the product life, some parts may be improved or re-configured, resulting in *new* part numbers.

Part List Illustration Location

The following table indicates where to find the appropriate part list illustration.

Table A - 1
Part List Illustration Location

Part	
Top	*page A - 3*
Bottom	*page A - 4*
Main Board	*page A - 5*
HDD	*page A - 6*
LCD	*page A - 7*

Top

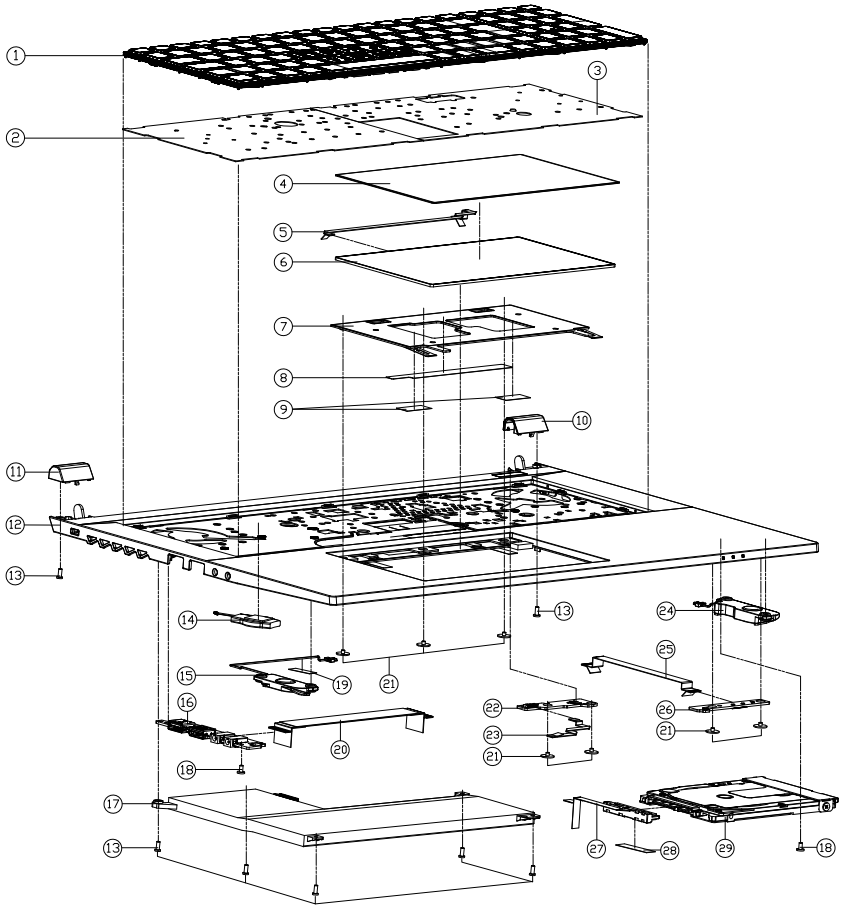

ITEM	PART NAME	PART NO	REMARK
1	KB FOR NON BL KB US SERIES NP70HK	6-NP70HK-KB-NBL-US	KB FOR NON BL KB SERIES
1	KB FOR MULTI 15C BL KB US SERIES NL50CU	6-NL50CU-KB-MCL-US	KB FOR MULTI 15C BL KB SERIES
1	KB JAPANESE CW9R6R0UJ-43XE NL30CU BLACK WHITE SILVER (NON PRINTING SIGNATION WITH WINN KEY C32259W0 FOR MCJ	6-80-N15Z0-21D-1M	KB FOR MCJ
1	KB JAPANESE CW9R6R0UJ-43XE NL30CU BLACK SIGNATION WITH WINN KEY C32259W0 FOR MCJ	6-80-N15Z0-212-1M	KB FOR MCJ
2	WD BL KB MYLAR L (PET+3M-7533X 152.65*104.65*0.43T) NP70HP	6-40-NP7H2-040	FOR MCJ KB FOR NON BL KB JP SERIES
3	WD BL KB MYLAR R (PET+3M-7533X178.05*104.65*0.43T) NP70HP	6-40-NP7H2-030	FOR MCJ KB FOR NON BL KB JP SERIES
4	CLICK PAD MYLAR (AG32+SDTT-13NX150.8*90.8*0.51T) NP70HP	6-40-NP7H2-061	
5	FFC CABLE FOR TP TO MB L=185MM 60V PITCH 0.5/8PIN (QX) NP70HK	6-43-NP700-022	
6	CLICK PAD FOCALTECH (OC PTP + PS2 TP) FHF09A8PK (FW14X150X50 MM) NS70MU	6-49-NS703-012	
7	CLICK PAD BKT SGCC NS70MU	6-33-NS702-080	
8	CLICK MYLAR (PET+DS+5) (95*10*0.15) NP70HK	6-40-NP702-020	
9	TOP CASE GASKET 1 (20*10*0.15) P650SE	6-47-00190-209	
10	TOP HINGE COVER R SLIDE (COVESTRO FR3008+) NP70HP	6-42-NP7H2-012	
11	TOP HINGE COVER L SLIDE (COVESTRO FR3008+) NP70HP	6-42-NP7H2-022	
12	TOP CASE MODULE NP70HK	6-39-NP702-012	
13	SCREW M2*5L KI(T=0.8 D=3.5) BK/Z ICT NY	6-35-B6120-5RC	
14	BAT. 20MM 3V 220MAH W/CABLE 55MM BCR2032H5.5VM0UB (SHIHINEI)	6-23-22015-TE0	
15	SPK+CABLE L L42.45*15.85 2W 4? L200MM VTS251410-03 NP70HK	6-23-5NP70-0L0	
16	AUDIO BOARD W/REDRIVER V2.0 NP70HK	6-77-NP708-D02	
17	DMLP S LI 152V/323W/49W 45P SOUDVENTER (DDAR5D0 0S4N0S9N07 C0F5WN0 NP50DB	6-87-NP50S-43G01	
17	DMLP S LI 152V/325W/49W 45P DIP/ADEN (DDAR5D0 9N0AN0S9N C0F5WN0 (FRIMO) NP50DB	6-87-NP50S-41B12	
18	SCREW M2*4L KI NI ICT NY (DD=Ø4.5,DT=0.8)	6-35-B1120-4RC	
19	TOP CASE MYLAR FR83 25*7*0.05 P180HM	6-40-P1802-030	
20	FFC CABLE AUDIO TO MB L=129MM 60V 30PIN (QX) NP70HP	6-43-NP7H0-011	
21	SCREW M2*2L KI BK/Z ICT NY(Ø8,T=0.6)	6-35-B6120-2RE	
22	POWER SWITCH BOARD V2.0 NP70HK	6-77-NP70S-D02	
23	FFC CABLE POWER TO MB L=71MM 60V 4PIN (QX) NP50DB	6-43-NP500-021	
24	SPK+CABLE R L44*23 2W 4? L50MM VTS251410-04 NL50CU	6-23-5NL5C-0R0	
25	FFC CABLE FOR HALL TO MB L=112MM 60V PITCH 0.5/16PIN (QX) NP70HK	6-43-NP700-012	
26	LED BOARD V2.0 NP70HK	6-77-NP704-D02	
27	HDD CONCB-CN6250000006)+PCB+V/CABLE+DATE CODE (FFC CABLE 66.0MM) NP50DB	6-23-FNP50-012	
28	TAPE MYLAR (C),MYLAR M550J	6-40-M55J2-030	
29	W/O HDD ASS'Y NP70HK	6-79-NP70HK0J-010	
29	W/HDD ASS'Y NP70HK	6-79-NP70HK0J-020	

Figure A - 1
Top

Bottom

Figure A - 2
Bottom

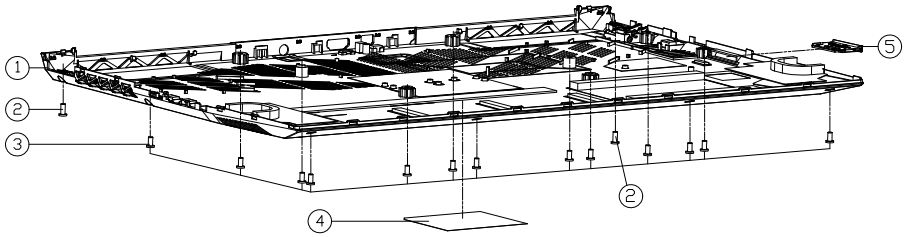

ITEM	PART NAME	PART NO	REMARK
1	BOTTOM CASE MODULE NP70HK	6-39-NP703-012	
2	SCREW M2.5*6L K BZ ICT NY	6-35-82125-6RA	
3	SCREW M2.5*5L KI BK/Z ICT NY	6-35-B6125-5RA	
4	PRODUCT LABEL FOR NP70HK	6-45-NP70HK03-010	
4	PRODUCT LABEL FOR NP70HJ	6-45-NP70HJ03-010	
4	PRODUCT LABEL FOR NP70HH	6-45-NP70HH03-010	
5	DUMMY 3IN1 NON PUSH TYPE PC+ABS (C7230P-7010E) W9708UW	6-42-W9708-030	

Main Board

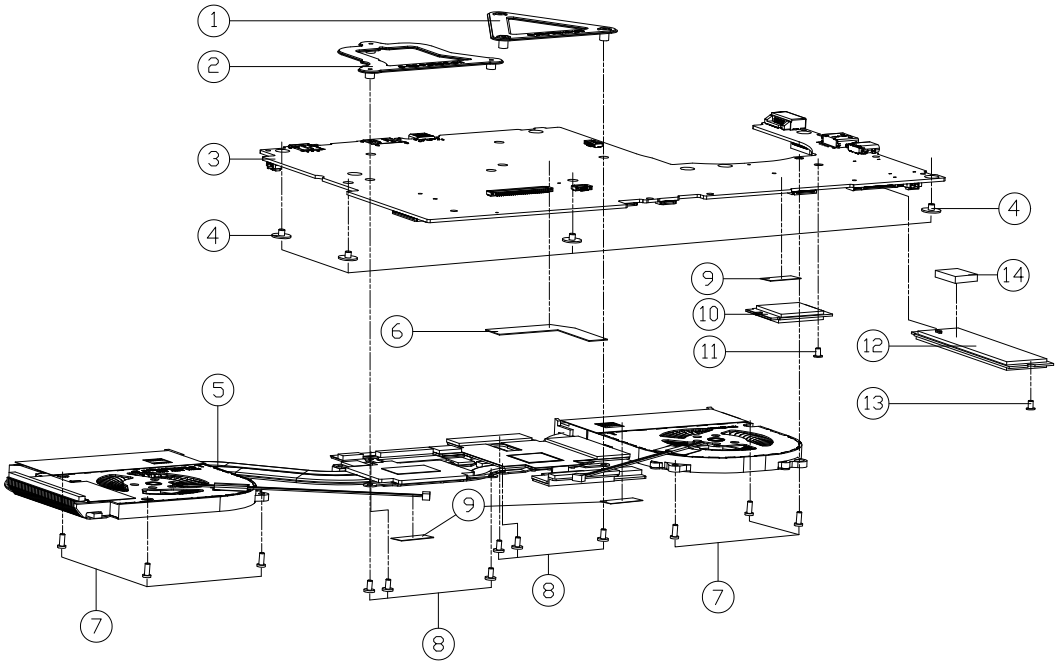

ITEM	PART NAME	PART NO	REMARK
1	CPU SUPPORTER MODULE P950EN	6-33-P95NS-100	
2	CPU SUPPORT PC50DN2	6-33-PC50S-011	
3	MAIN BOARD(CPU/I7-1260UV2.5G) VGA (SAMSUNG VRAM)(EDP)(W/TPM) NP70HK	6-77-NP70HK00-D02-2B	
3	MAIN BOARD(CPU/I5-1250UV2.6G) VGA (MICRON VRAM)(EDP)(W/TPM) NP70HK	6-77-NP70HK00-D02-5E	
3	MAIN BOARD(CPU/I7-1260UV2.3G) VGA (MICRON VRAM)(EDP)(W/TPM) NP70HK	6-77-NP70HK00-D02-3B	
3	MAIN BOARD(CPU/I7-1260UV2.5G) VGA (SAMSUNG VRAM)(EDP)(W/TPM) NP70HJ	6-77-NP70HJ00-D02-2C	
3	MAIN BOARD(CPU/I7-1260UV2.5G) VGA (SAMSUNG VRAM)(EDP)(W/TPM) NP70HJ	6-77-NP70HJ00-D02-2B	
3	MAIN BOARD(CPU/I5-1240UV2.7G) VGA (SAMSUNG VRAM)(EDP)(W/TPM) NP70HJ	6-77-NP70HJ00-D02-2D	
3	MAIN BOARD(CPU/I5-1140UV2.7G) VGA (SAMSUNG VRAM)(EDP)(W/O TPM) NP70HH	6-77-NP70HH00-D02-4D	
3	MAIN BOARD(CPU/I7-1260UV2.3G) VGA (SAMSUNG VRAM)(EDP)(W/TPM) NP70HH	6-77-NP70HH00-D02-2B	
3	MAIN BOARD(CPU/I7-1260UV2.5G) VGA (SAMSUNG VRAM)(EDP)(W/TPM) NP70HH	6-77-NP70HH00-D02-2C	
4	SCREW M2.5*2.5L KI BK/Z ICT NY(#8,T=0.6)	6-35-B6125-2R5	
5	HEATSINK MODULE NP70HK	6-31-NP70N-101	
6	ABSORBER MB VGA (EAS-120254*3M 467) 38*25*0.25T NP50HK	6-47-NP50S-K10	
7	SCREW M2*5L KI(T=0.8 D=3.5) BK/Z ICT NY	6-35-B6120-5RC	
8	SCREW M2*4L KI NI ICT NY (DD=#4.5,DT=0.8)	6-35-B1120-4RC	
9	TAPE MYLAR (C),MYLAR M550J	6-40-M55J2-030	
10	NANDFLASH DIMM DUAL DDR3 DUAL 2EFFECTIVE/FLASH 1 PACKAGE 8GB+4GB 1G DRAM(EFF) 4GB(8G) 8GB(16G) 16GB(32G) 8GB 2GB(16G) 8GB 2GB	6-88-N24GF-4200	
10	NANDFLASH DIMM DUAL DDR3 DUAL 2EFFECTIVE/FLASH 2 EDP 8GB+4GB(8G) 8GB+4GB(16G) 8GB+4GB(32G) 8GB(16G) 8GB(32G) 8GB 2GB	6-88-NV40F-4210	
10	NANDFLASH DIMM DUAL DDR3 DUAL CTOLINE FLASH 2 PACKAGE(8GB) 8GB+4GB(16G) 8GB+4GB(32G) 8GB(16G) 8GB(32G) 8GB 2GB	6-88-N15CF-4210	
10	NANDFLASH DIMM DUAL DDR3 DUAL 4GT/S 4 TYPE(8GB) FLASH 2 PACKAGE(8GB) 8GB+4GB(16G) 8GB+4GB(32G) 8GB(16G) 8GB(32G) 8GB 2GB	6-88-X17KF-4210	
11	SCREW M2*2L KI NI ICT NY (DD=#5 ,T=0.8)	6-35-B1120-2RA	
12	SSD M2 2280 SATA3 KINGSTON SNV425S2512G-AW (SNV425S) SATA3 3D TLC 96 LAYERS	6-85-D515B-K01	OPTION
12	SSD M2 2280 SATA3 DRAM CRUCIAL CT500BX500SSD1 (BX500) SATA3 3D TLC 96 LAYERS	6-85-D515B-B02	OPTION
12	SSD M2 2280 SATA3 MICRON CT512M2V2-1TB (1TB) PCIE GEN4 DRAMLESS 3D TLC 96 LAYERS	6-85-D515B-H05	OPTION
12	SSD M2 2280 SATA3 SAMSUNG MZVL2512HCJQ-00B00 (PM991) PCIE GEN4 3D TLC 128 LAYERS	6-85-D515B-S0C	OPTION
12	SSD M2 2280 1TB WD SSDPNXT-1T00 (SN730) PCIE GEN4 3D TLC 96 LAYERS	6-85-D511T-W01	OPTION
12	SSD M2 2280 1TB SAMSUNG MZVL21T0HBLU-00B00 (PM9B1A) PCIE GEN4 3D TLC 96 LAYERS	6-85-D511T-S04	OPTION
12	SSD M2 2280 1TB MICRON CT2000P310SSD4 (1TB) PCIE GEN4 3D TLC 96 LAYERS	6-85-D511T-H01	OPTION
12	SSD M2 2280 256G SAMSUNG MZVLB256HBHQ-00000 (PM9B1A) PCIE GEN4 3D TLC 96 LAYERS	6-85-D51R6-S0A	OPTION
12	SSD M2 2280 512G SATA3 MICRON MTFDDAV512TJL(CT512L3CSSD) SATA3 3D TLC 96 LAYERS	6-85-D515B-102	OPTION
12	SSD M2 2280 512G DRAM CRUCIAL(CT500P3SSD8) PCIE GEN4 DRAMLESS 3D TLC 96 LAYERS	6-85-D515B-B01	OPTION
12	SSD M2 2280 512G KINGSTON SNV2S/500G(SNV2S/500G) SATA3 3D TLC 64 LAYERS	6-85-D515B-K00	OPTION
12	SSD M2 2280 512G SAMSUNG MZVL2512HCJQ-00B00 (PM991A) PCIE GEN4 3D TLC 96 LAYERS	6-85-D515B-S0A	OPTION
12	SSD M2 2280 64GB DUAL NAND(FLASH)(EAS) OPTANE MEMORY 32GB 16GB 2 PCIE GEN2 3D NAND	6-85-D5116-Z02	OPTION
13	SCREW M2*3.2L BNI ICT NY FDR M2	6-35-Z9120-3R2	
14	THERMAL PAD MA500 (17.3*17.3*2.5MM) NP50DB	6-48-NP508-010	

Figure A - 3
Main Board

A.Part Lists

HDD

Figure A - 4
HDD

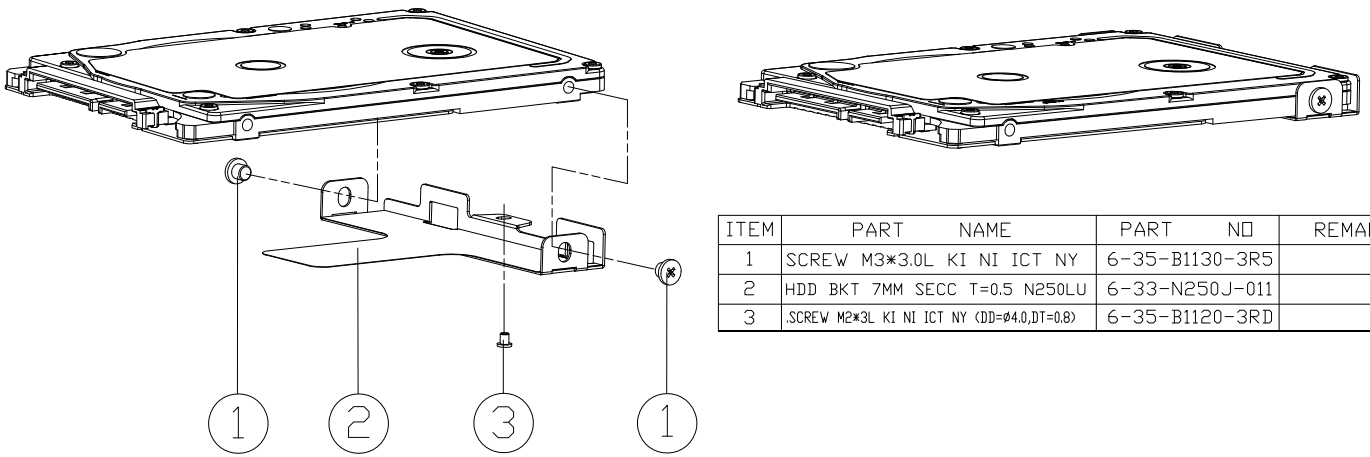

ITEM	PART NAME	PART NO	REMARK
1	SCREW M3*3.0L KI NI ICT NY	6-35-B1130-3R5	
2	HDD BKT 7MM SECC T=0.5 N250LU	6-33-N250J-011	
3	.SCREW M2*3L KI NI ICT NY (DD=Ø4.0,DT=0.8)	6-35-B1120-3RD	

LCD

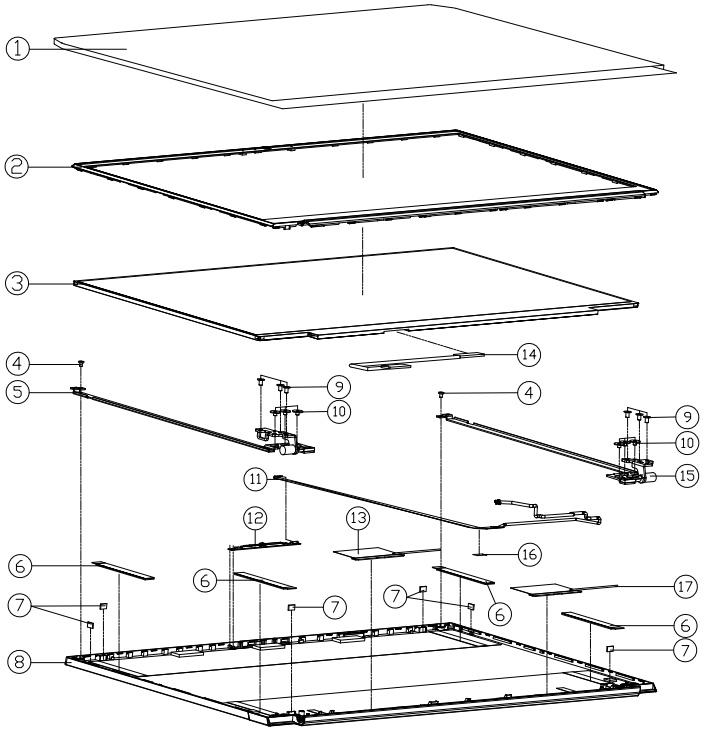

ITEM	PART NAME	PART NO	REMARK
1	LCD PROTECT MYLAR BOPP NB70TJ1	6-40-NB708-010	
2	LCD FRONT COVER MODULE NP70HP	6-39-NP7H1-012	
3	LCD N17.3" FHD/WVA/144HZ/SW G-SYNC/N7/NON GT/EDP LG LP173WFG-SPB3 3.5MM	6-50-NBB35-L124	
3	LCD N17.3" FHD/WVA/N4/NON GT/EDP BOE NV173FHM-N49 LED 3.5MM	6-50-NBB35-Z010	
3	LCD N17.3" FHD/WVA/144HZ/N4/NON GT/EDP AU B173HAN04.9 LED 3.5MM	6-50-NBB35-G170	
3	LCD N17.3" FHD/WVA/N7/NON GT/ EDP LG LP173WF5-SPB3 LED 3.5MM	6-50-NBB35-L020	
4	.SCREW M2*3L KI NI ICT NY (DD=Ø4.0,DT=0.8)	6-35-B1120-3RD	
5	HINGE L (SK7)NP70HP	6-33-NP7H1-0L1	
6	LALATAPE SPONGE (9*60*1.0T)	6-47-0019L-003	
7	RUBBER FOR LCD PANEL(6*4*0.8T) NP70HP	6-47-NP7H1-031	
8	BACK COVER MODULE NP70HP	6-39-NP7H1-022	
9	SCREW M2.5*5L KI BK/Z ICT NY	6-35-B6125-5RA	
10	SCREW M2.5*2.5L KI BK/Z ICT NY(Ø8,T=0.6)	6-35-B6125-2R5	
11	CCD CABLE L=550MM 30V 8PIN (HL) ADD MARK LABLE NH50ED	6-43-NH50T-011	
12	UVC CAMERA CH20W FD0R6D CFXH22D0C95ELH IM HD W/2B-MIC 4.0*12 OV9734 N5820 FW0R WHITE-LED	6-88-N15ZC-5102	
12	UVC CAMERA H20N FD0R6D DWH89V0B-00 IM HD OV9734 N5820 FW0R WHITE-LED W/2B-MICWHRBV BORDER WITH FFC	6-88-N15ZC-4900	
13	ANTENNA IPEX4 WLAN WGT WL2 PCB DL 50X5.8MM 2.4G/5G/6GHZ WL2=400MM NP70HP	6-23-7NP7H-020	
14	COAXIAL CABLE FOR EDP 300MM 30V I 40 PIN (HL/LW CONH.V06130-2241-HF) PB70EF	6-43-PB701-011-N	
14	WIRE CABLE FOR EDP 300MM 30V I 30 PIN (HT/LW CONH.VD-A30LPMSD) PB50EF	6-43-PB501-032-2N	
15	HINGE R (SK7) NP70HP	6-33-NP7H1-0R1	
16	TOP CASE MYLAR FR83 25*7*0.05 P180HM	6-40-P1802-030	
17	ANTENNA IPEX4 WLAN WGT WL1 PCB DL 50X5.8MM 2.4G/5G/6GHZ WL1=250MM NP70HP	6-23-7NP7H-010	

Figure A - 5
LCD

Appendix B: Schematic Diagrams

This appendix has circuit diagrams of the ***NP70HH / NP70HJ / NP70HK*** notebook's PCB's. The following table indicates where to find the appropriate schematic diagram.

Table B - 1
SCHEMATIC DIAGRAMS

Diagram - Page	Diagram - Page	Diagram - Page
System Block Diagram - Page B - 2	*GPU GND - Page B - 23*	*1V8_RUN/AON, NV3V3, 3.3VA - Page B - 44*
Processor 1/6 - Page B - 3	*mDP - Page B - 24*	*3V, 5V, 3VS, 5VS - Page B - 45*
Processor 2/6 - Page B - 4	*Panel, Inverter - Page B - 25*	*1.8V, 1.8VS, 1.8VA, C10 - Page B - 46*
Processor 3/6 - Page B - 5	*HDMI - Page B - 26*	*VCCST, VCCSTG - Page B - 47*
Processor 4/6 - Page B - 6	*PCH 1/7 - Page B - 27*	*VNN / V1.05 - Page B - 48*
Processor 5/6 - Page B - 7	*PCH 2/7 - Page B - 28*	*VCCIN - Page B - 49*
Processor 6/6 - Page B - 8	*PCH 3/7 - Page B - 29*	*VCCIN Output - Page B - 50*
DDR4 CHA SO-DIMM_0 - Page B - 9	*PCH 4/7 - Page B - 30*	*AC_In, Charger - Page B - 51*
DDR4 CHB SO-DIMM_0 - Page B - 10	*PCH 5/7 - Page B - 31*	*VCCIN AUX - Page B - 52*
VGA PCI Express - Page B - 11	*PCH 6/7 - Page B - 32*	*DDR 1.2V / 0.6VS, 2.5V - Page B - 53*
GPU Frame Buffer Partition - Page B - 12	*PCH 7/7 - Page B - 33*	*NVVDD1 - Page B - 54*
Frame Buffer A - Page B - 13	*Audio Codec - Page B - 34*	*NVVDD2 - Page B - 55*
Frame Buffer A - Page B - 14	*M.2 WLAN+BT, PCIE 4X SSD - Page B - 35*	*PEX_VDD - Page B - 56*
Frame Buffer B - Page B - 15	*Type-C & A - Page B - 36*	*FBVDDQ - Page B - 57*
Frame Buffer B - Page B - 16	*Card Reader RTS5227S RTD3 - Page B - 37*	*OVRM - Page B - 58*
VGA NVVDD Coupling - Page B - 17	*LAN RTL8111H RTD3 - Page B - 38*	*Audio Board + Redriver - Page B - 59*
Straps and XTAL - Page B - 18	*HDD, Click TP, Audio - Page B - 39*	*LED Board - Page B - 60*
IFP I/O Interface - Page B - 19	*LED, CCD, TPM, Power SW Bd. - Page B - 40*	*Power SW Board - Page B - 61*
Misc - GPIO, I2C and VBIOS - Page B - 20	*KBC-ITE IT5570 - Page B - 41*	*17" LED Board - Page B - 62*
NVIDIA Power Sequence - Page B - 21	*RGB KB - Page B - 42*	*Power Sequence - Page B - 63*
GPU NVVDD, FBVDDQ - Page B - 22	*VDD3, VDD5 - Page B - 43*	

Version Note

The schematic diagrams in this chapter are based upon version 6-7P-NP705-002. If your mainboard (or other boards) are a later version, please check with the Service Center for updated diagrams (if required).

System Block Diagram

Sheet 1 of 62
System Block Diagram

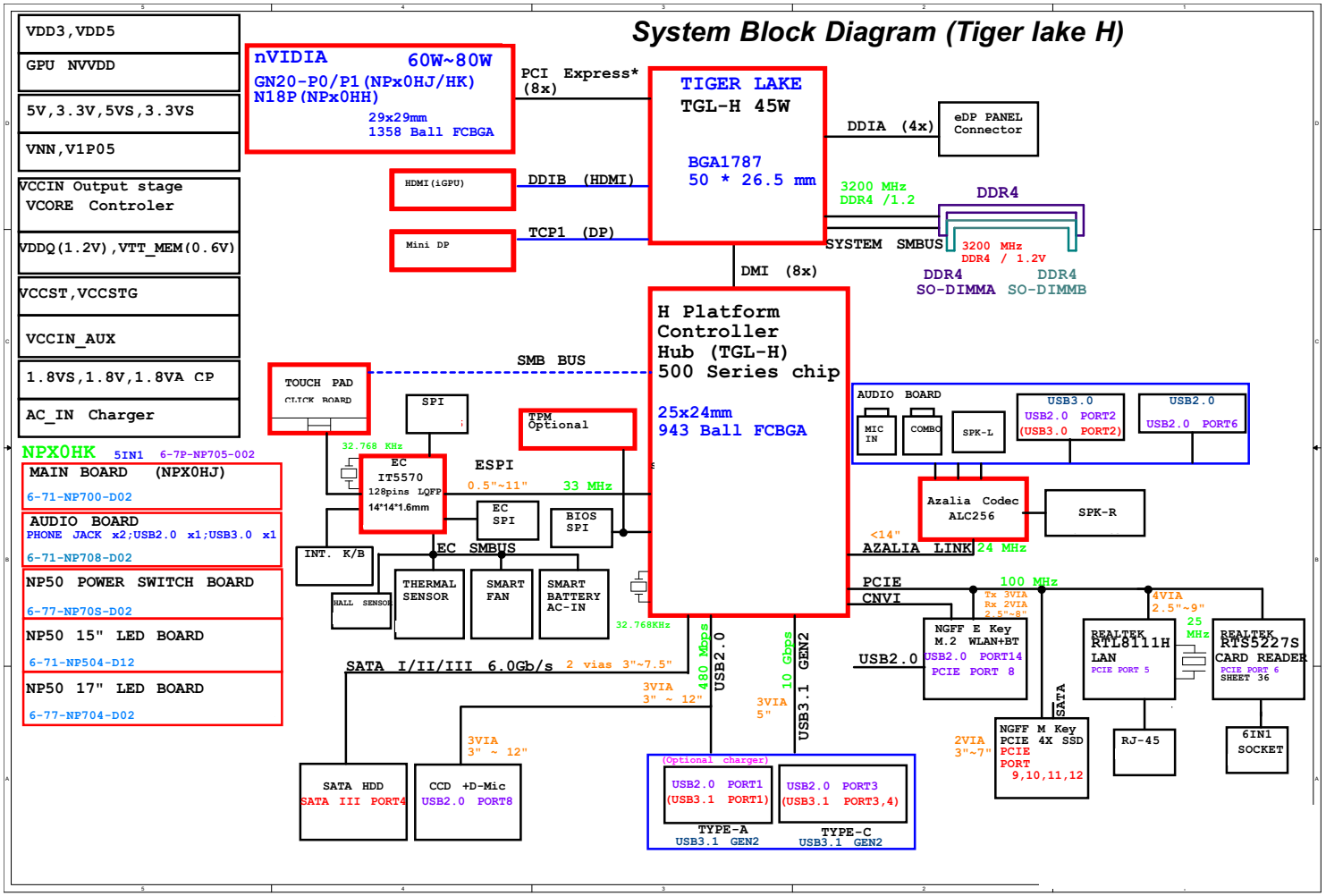

Processor 1/6

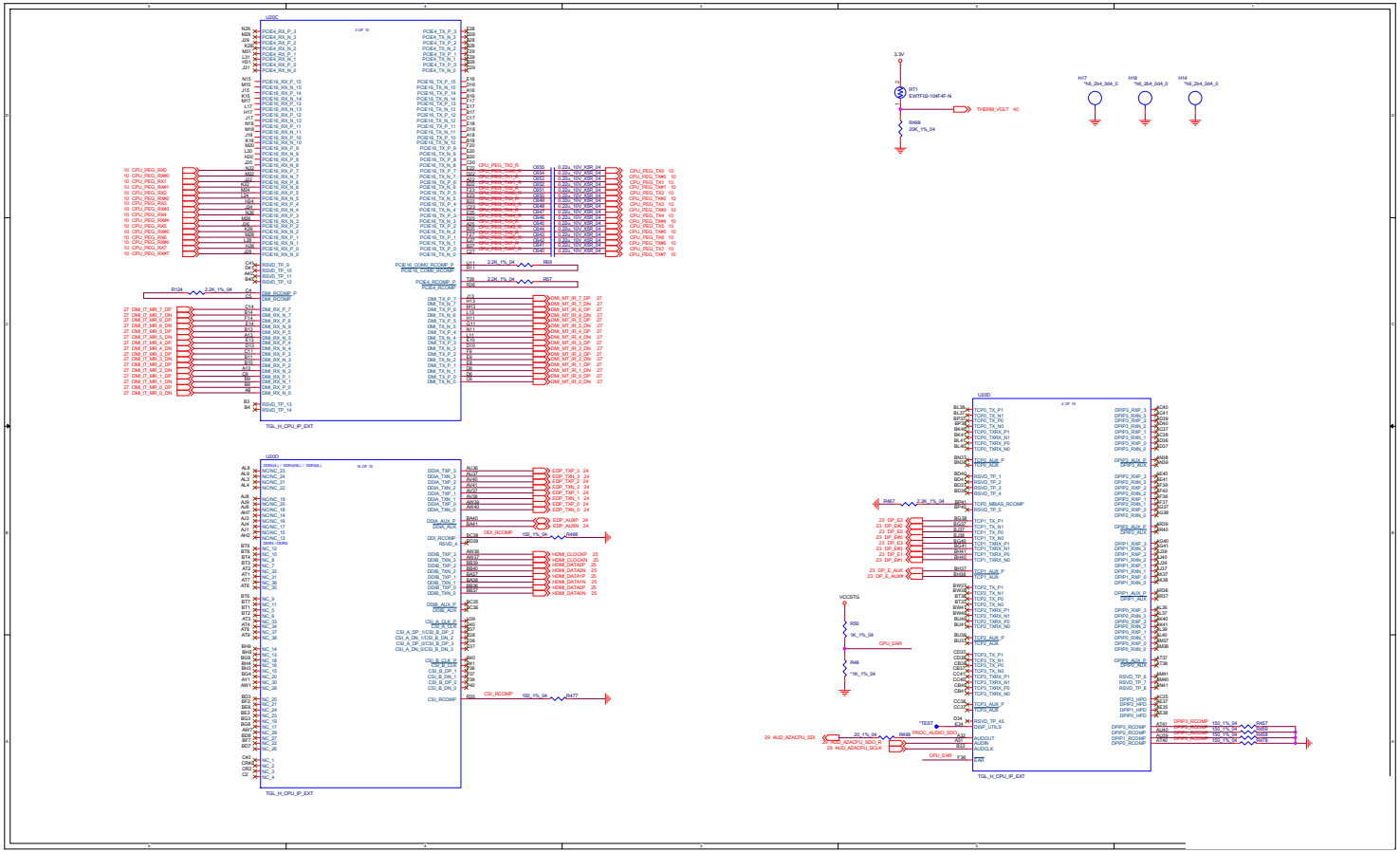

Sheet 2 of 62
Processor 1/6

Processor 2/6

Sheet 3 of 62
Processor 2/6

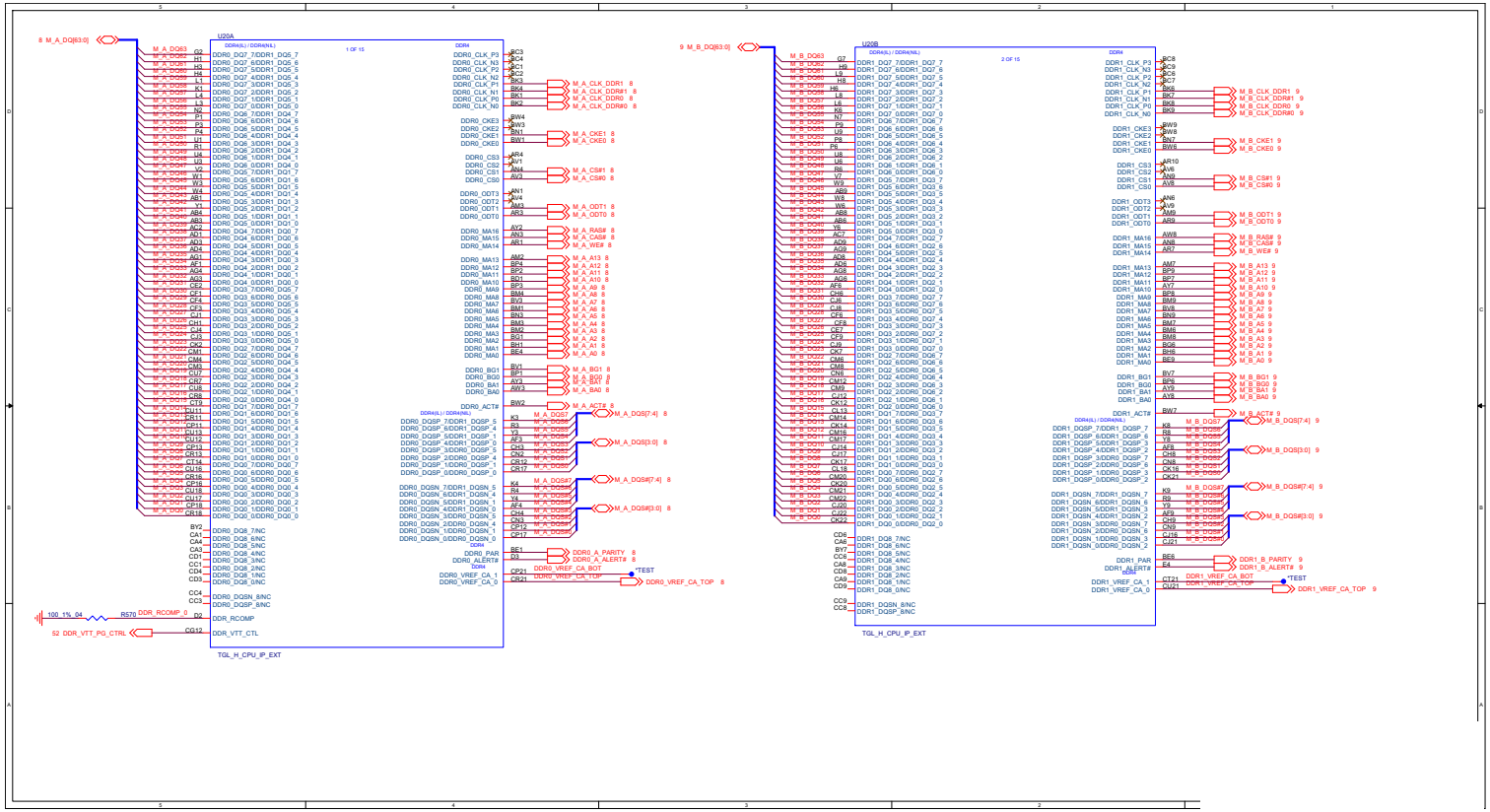

Processor 3/6

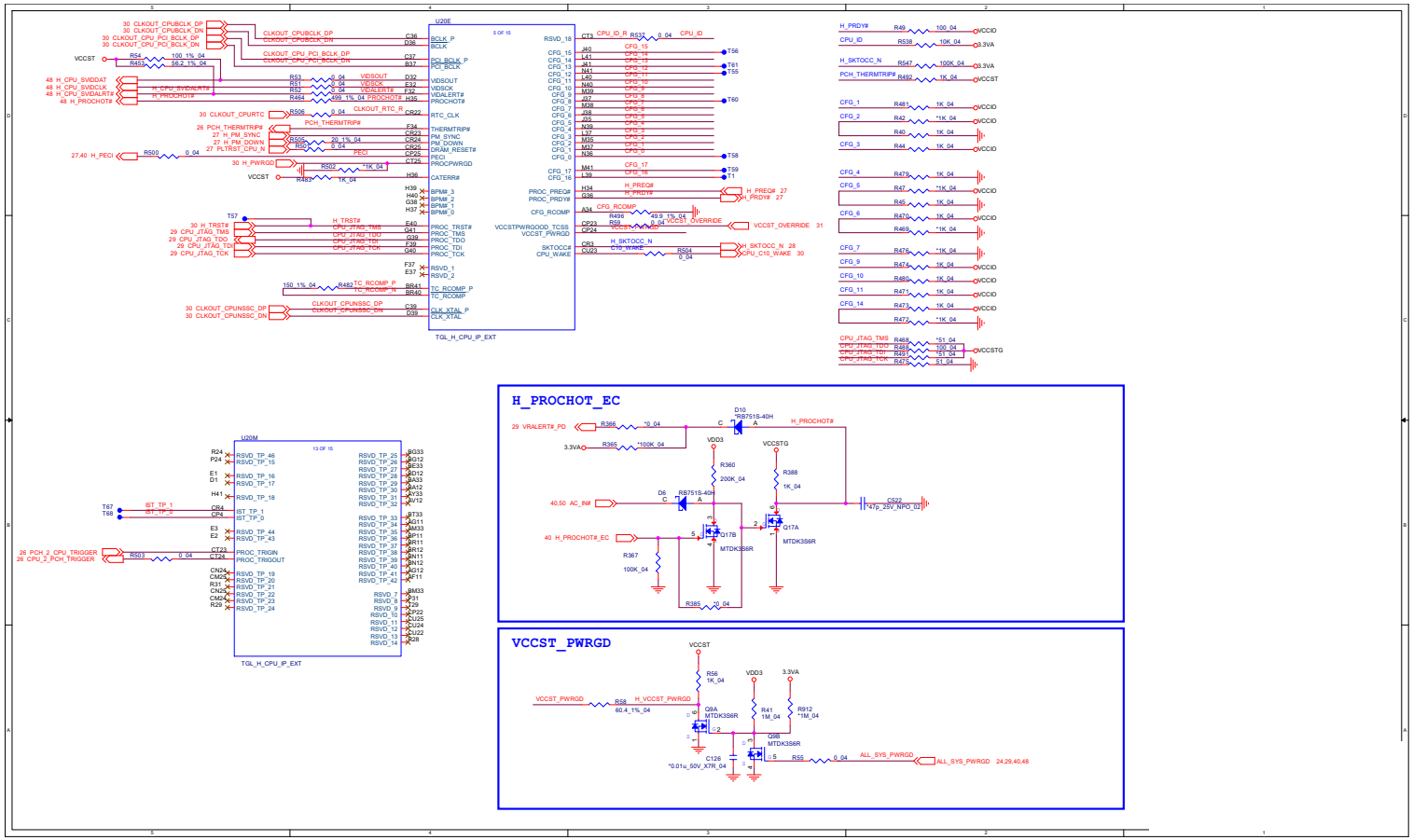

Sheet 4 of 62
Processor 3/6

Processor 4/6

Sheet 5 of 62
Processor 4/6

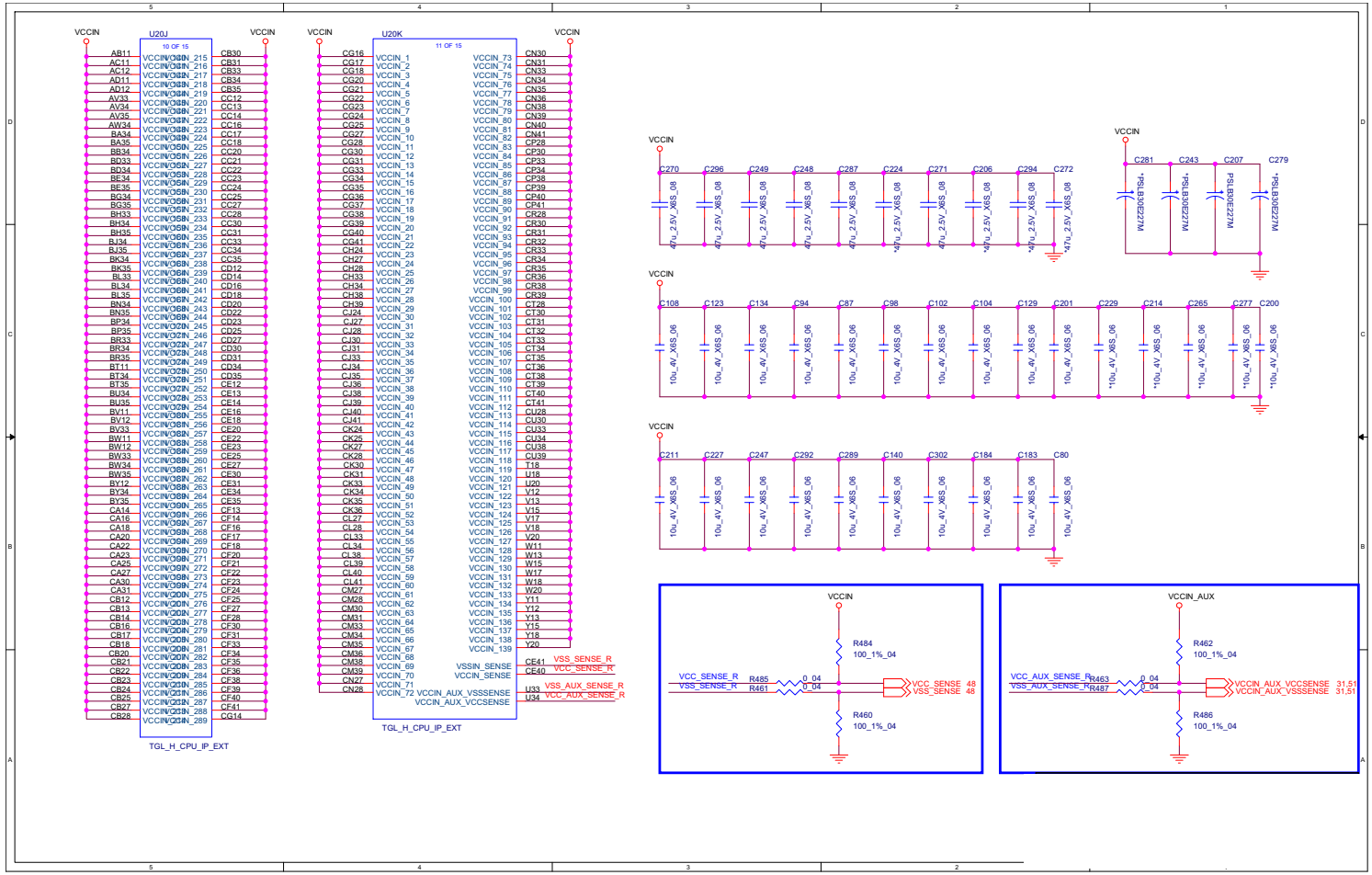

Processor 5/6

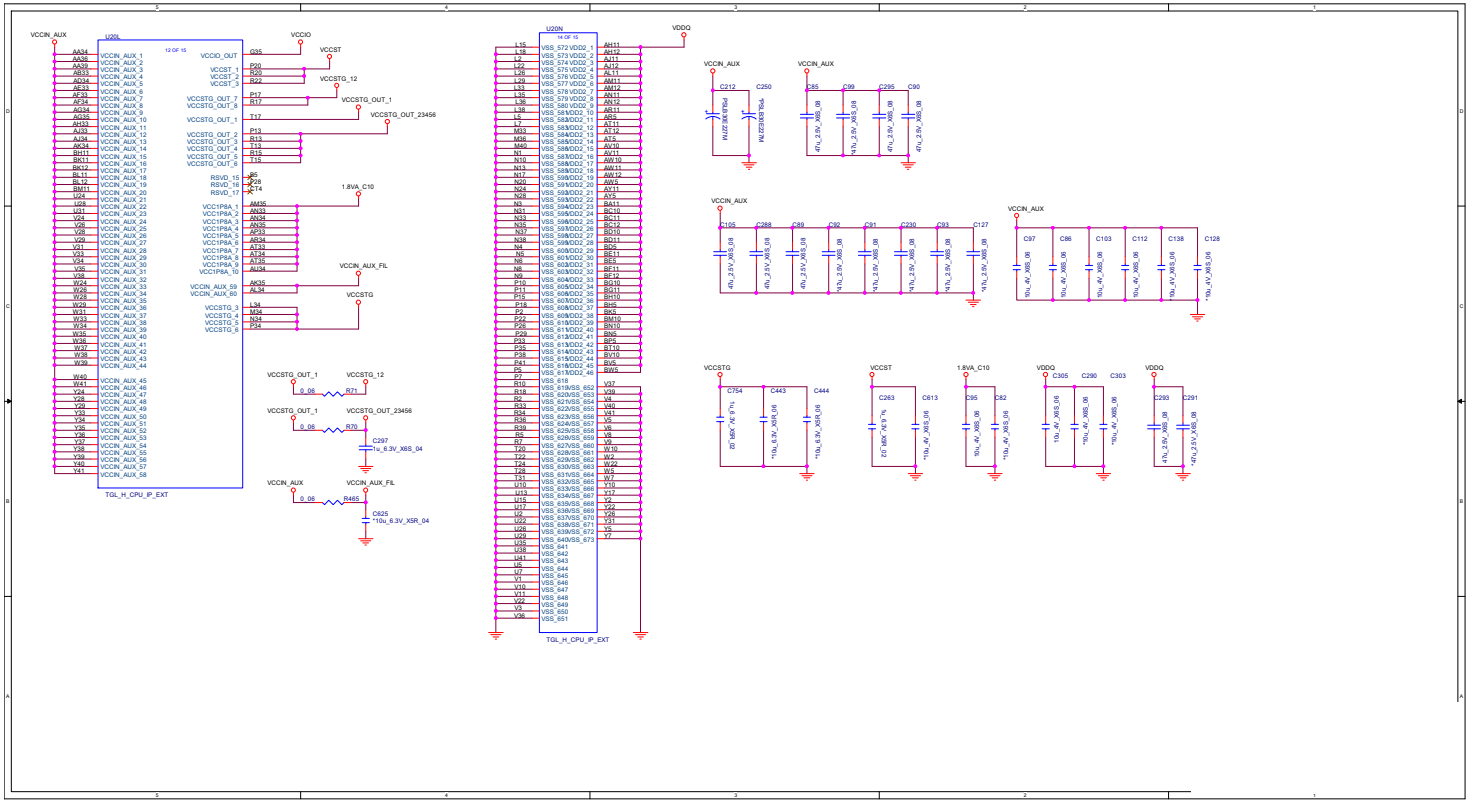

Sheet 6 of 62
Processor 5/6

Processor 6/6

Sheet 7 of 62
Processor 6/6

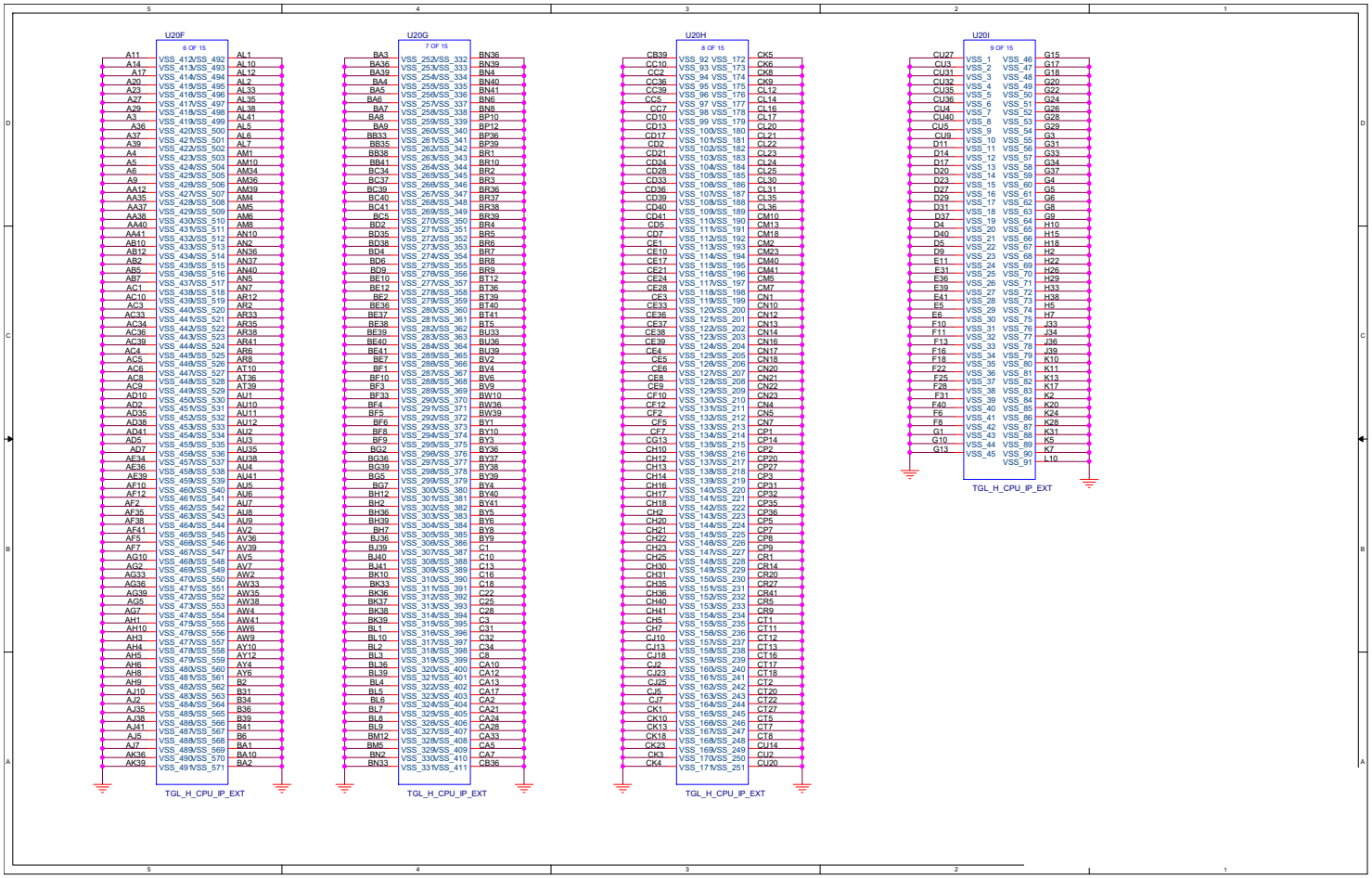

DDR4 CHA SO-DIMM_0

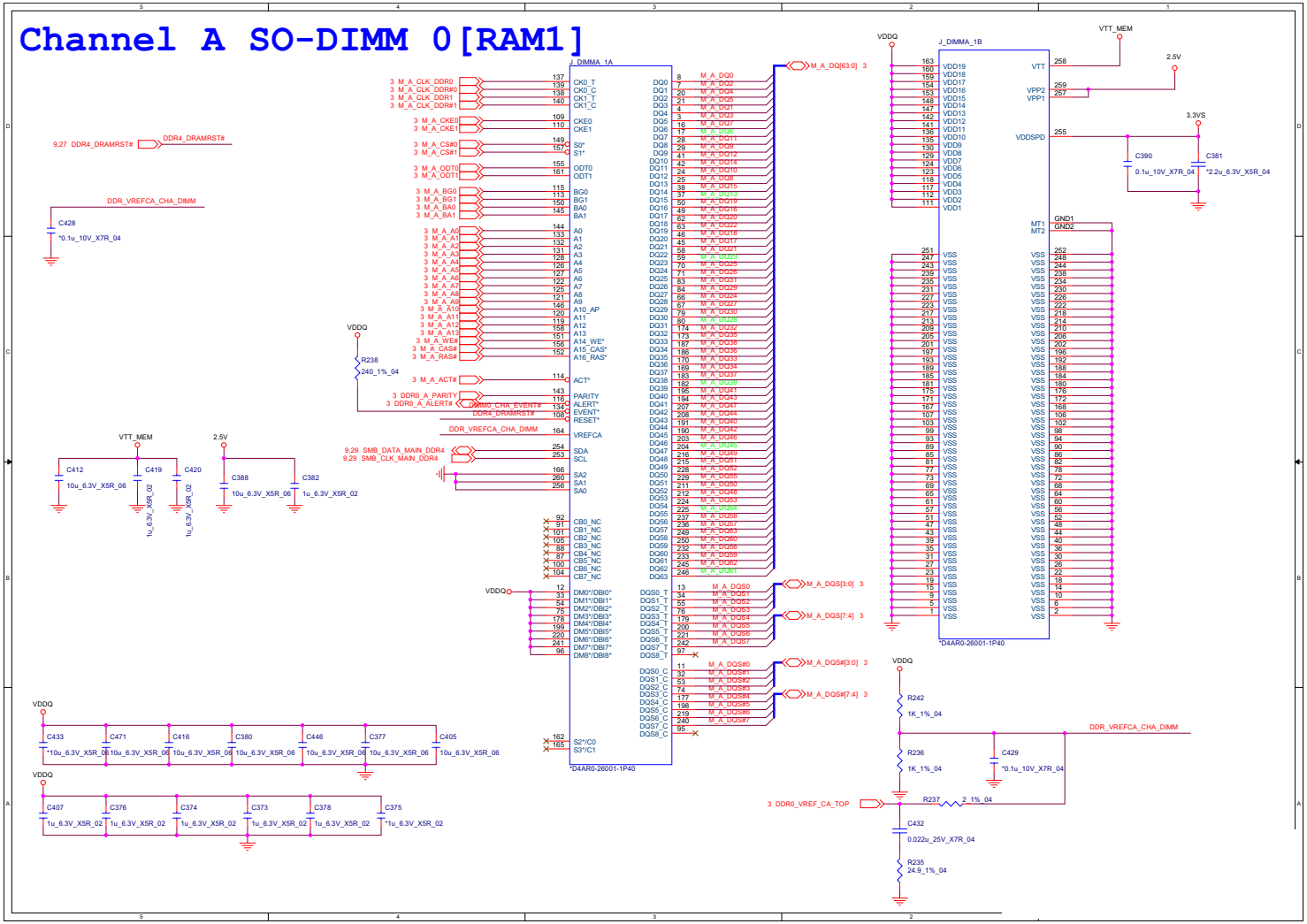

Sheet 8 of 62
DDR4 CHA SO-DIMM_0

DDR4 CHB SO-DIMM_0

Sheet 9 of 62
DDR4 CHB SO-DIMM_0

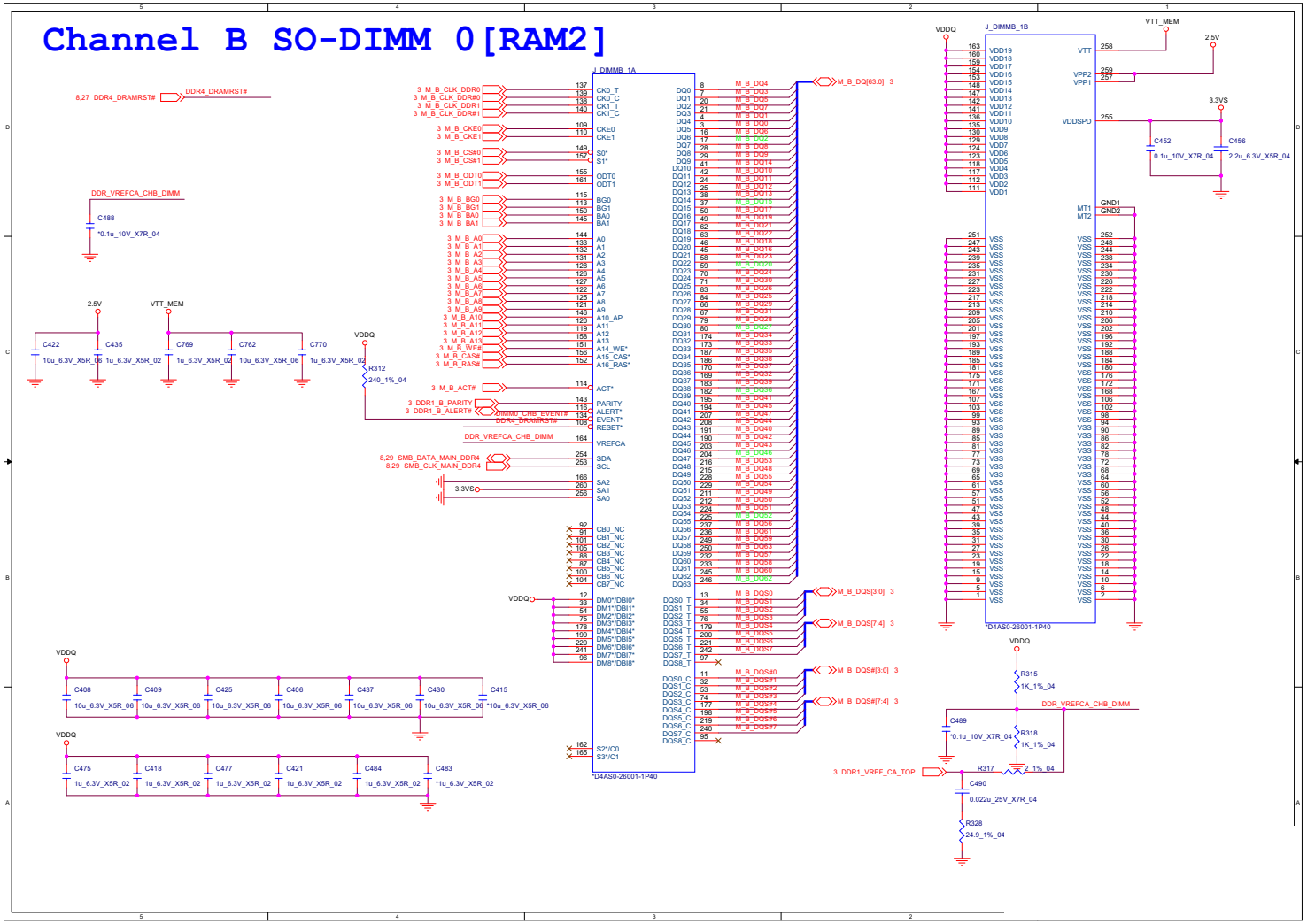

VGA PCI Express

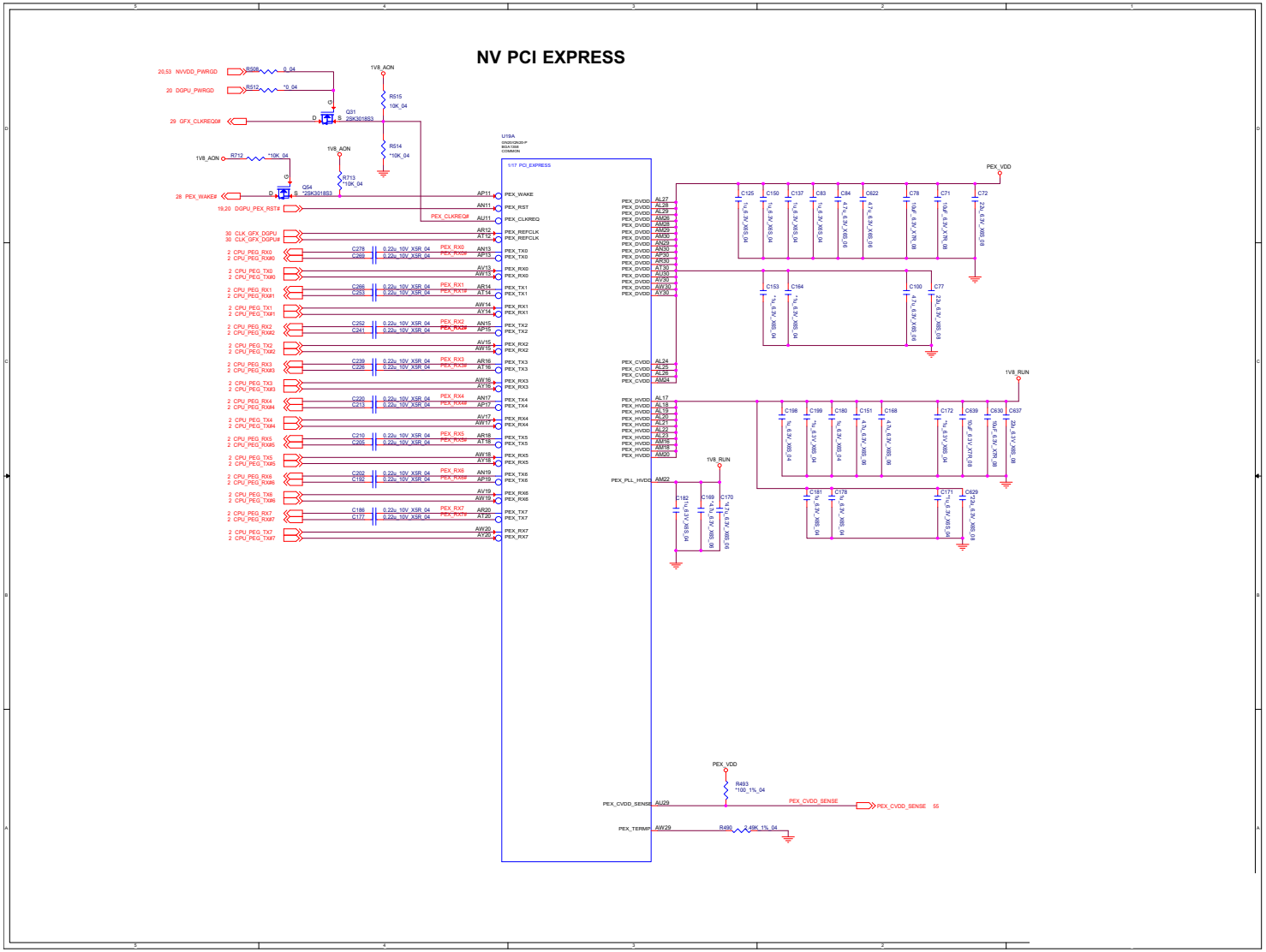

Sheet 10 of 62
VGA PCI Express

GPU Frame Buffer Partition

Sheet 11 of 62
GPU Frame Buffer Partition

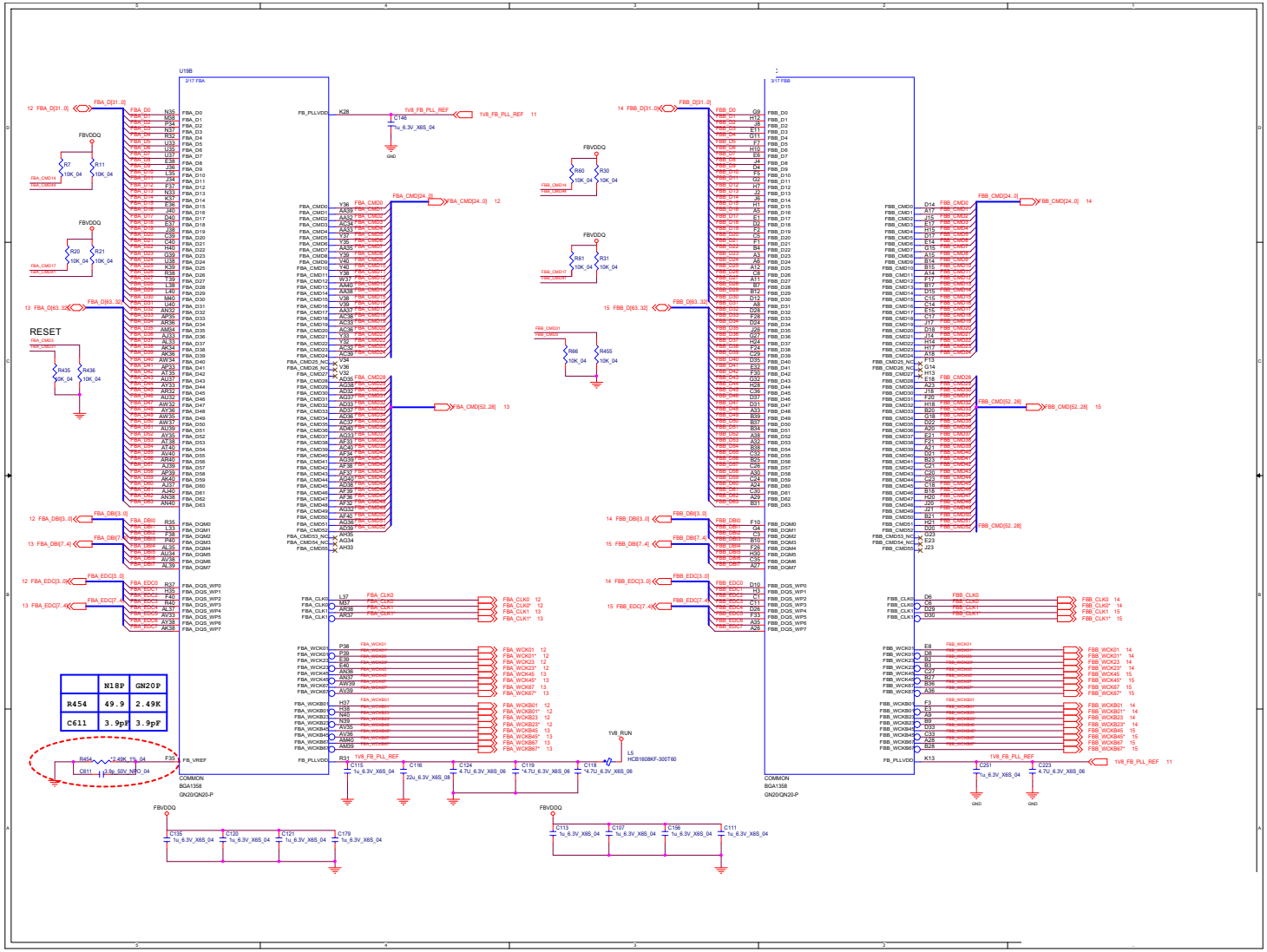

Frame Buffer A

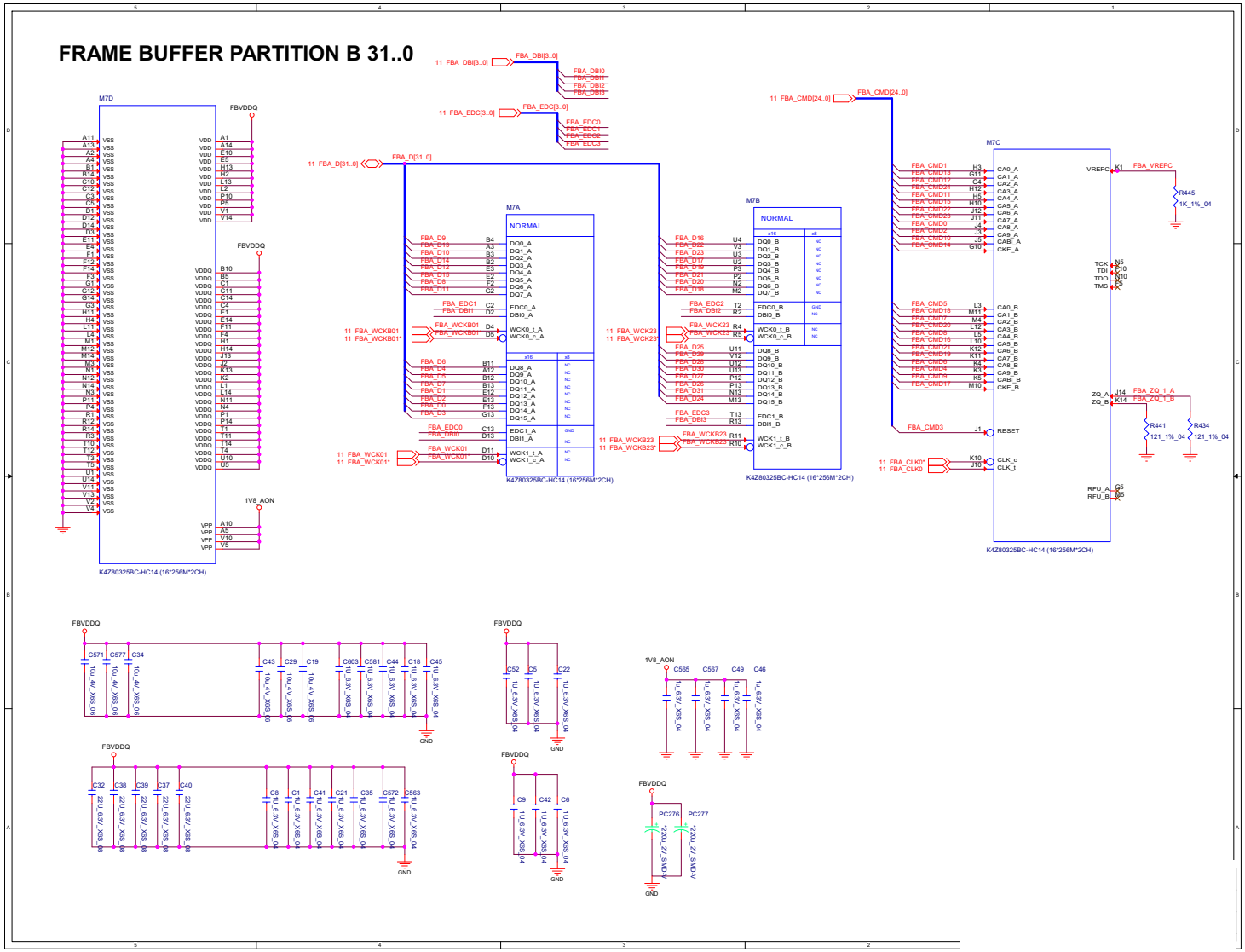

Sheet 12 of 62
Frame Buffer A

Frame Buffer A

Sheet 13 of 62
Frame Buffer A

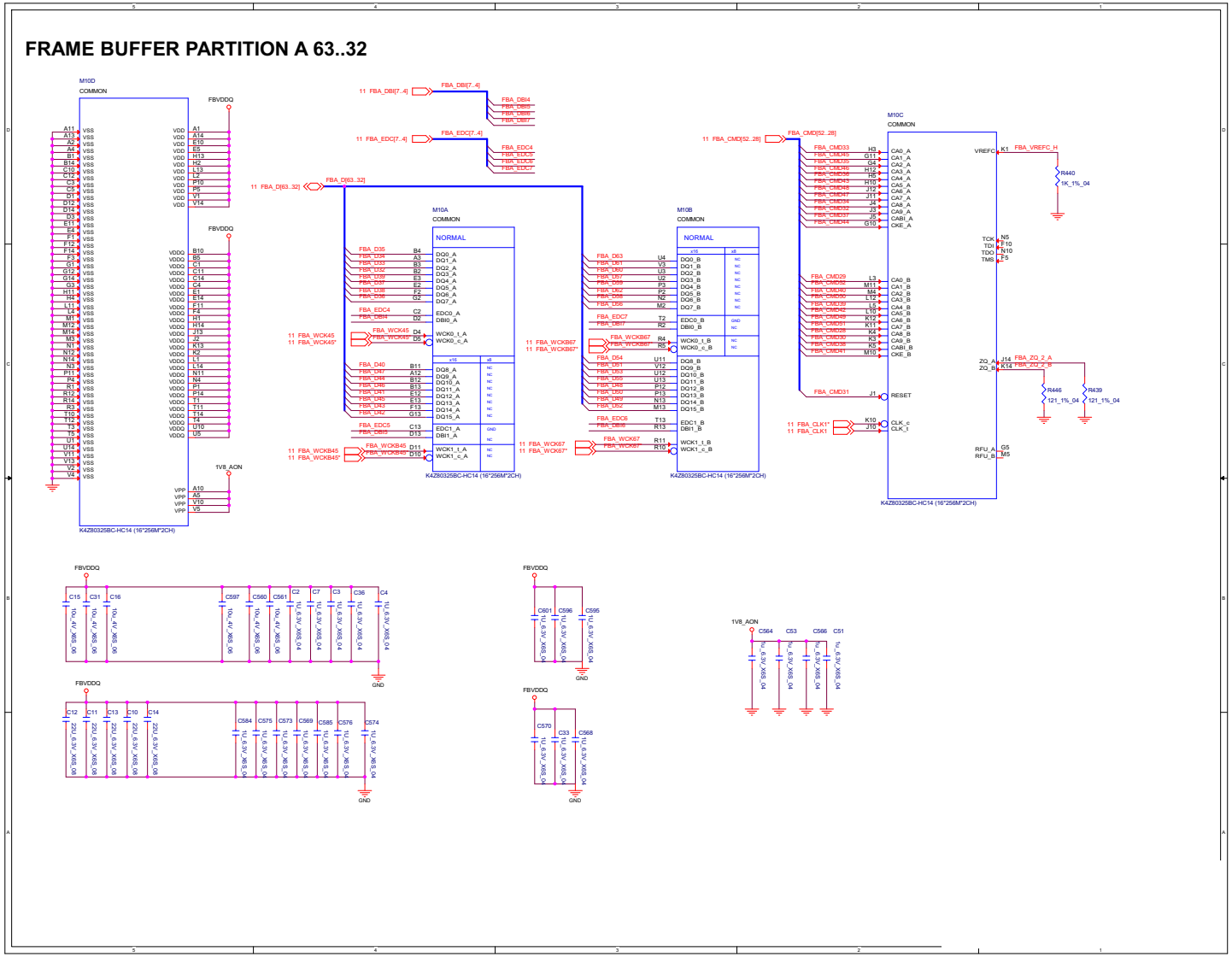

Frame Buffer B

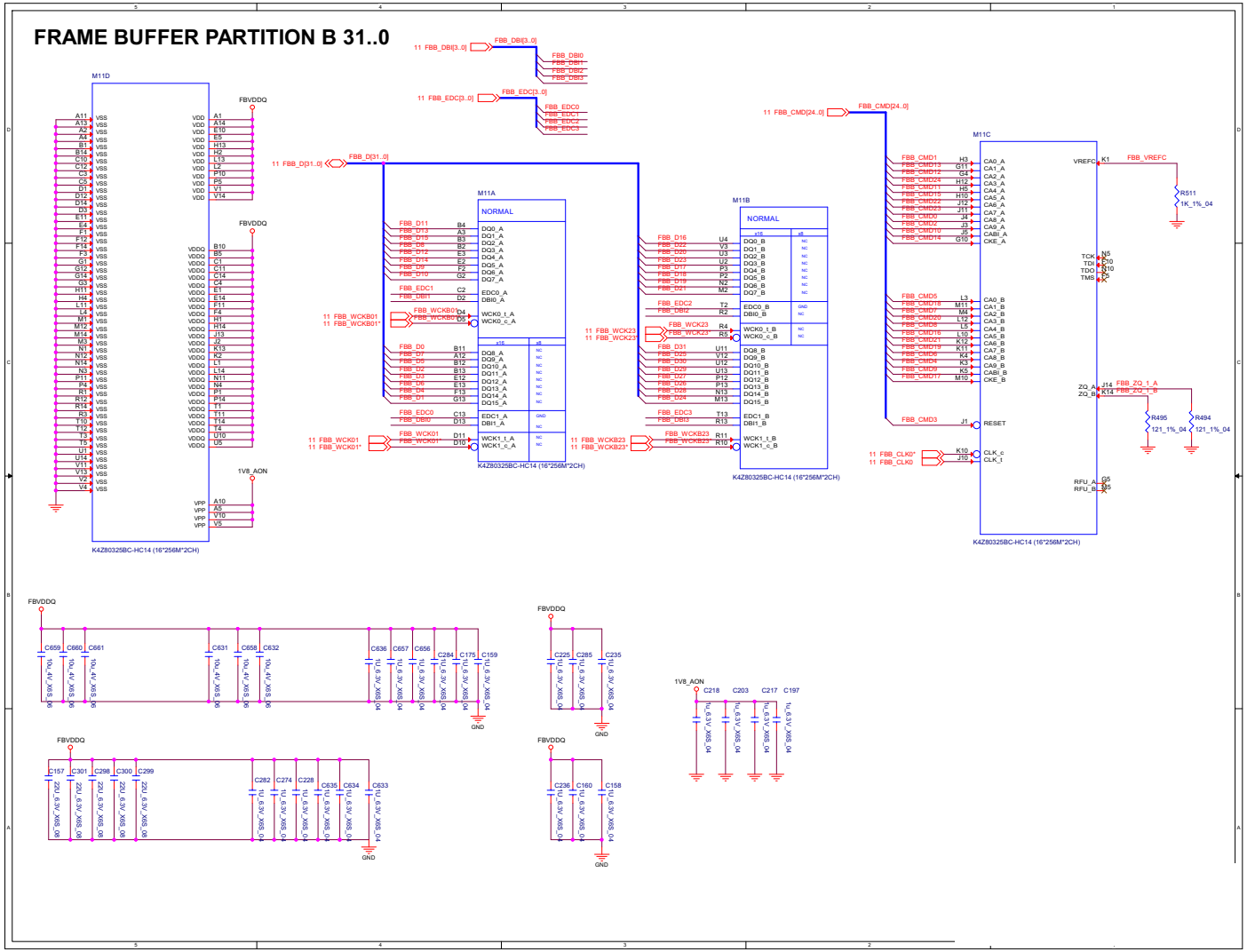

Sheet 14 of 62
Frame Buffer B

Frame Buffer B

Sheet 15 of 62
Frame Buffer B

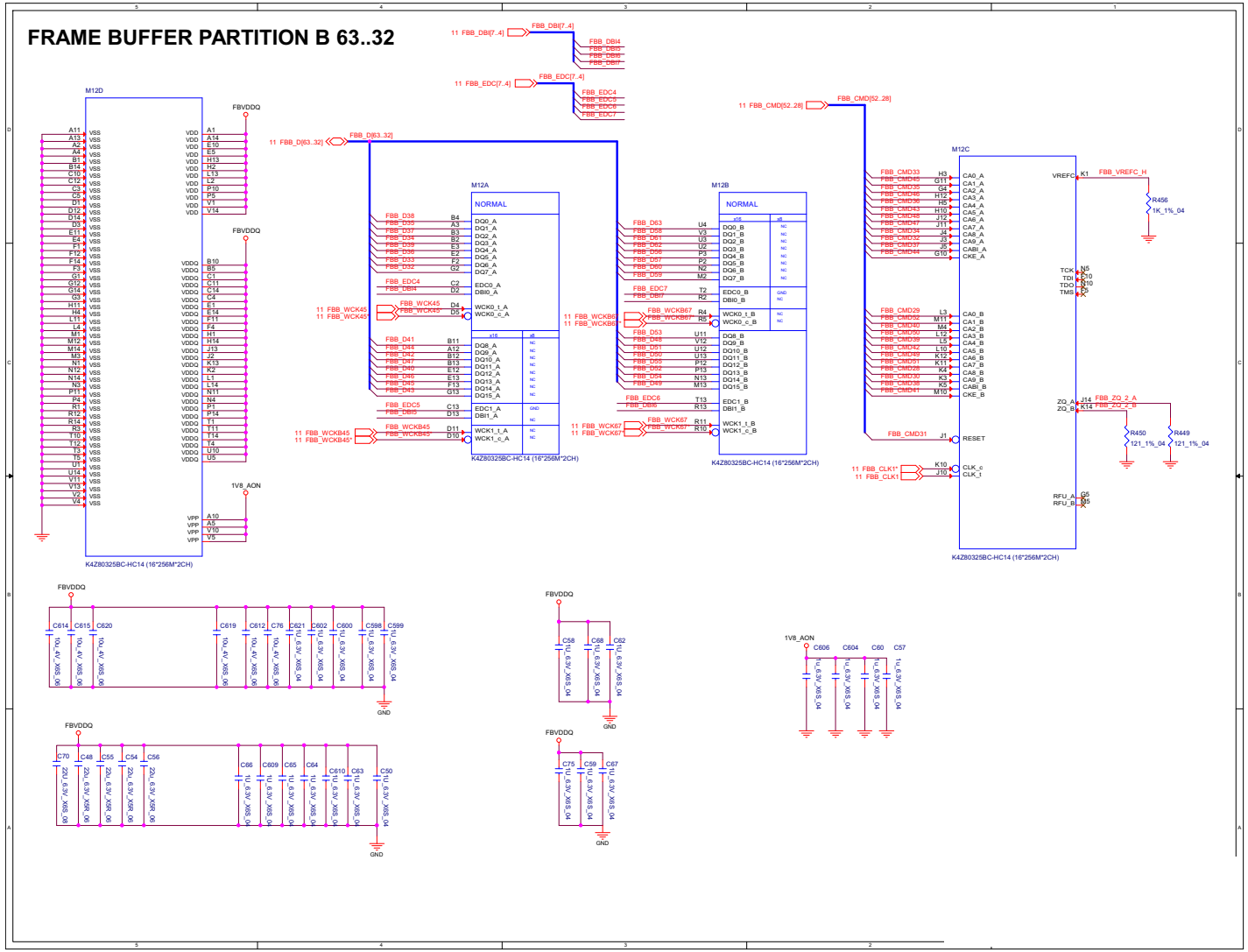

VGA NVVDD Coupling

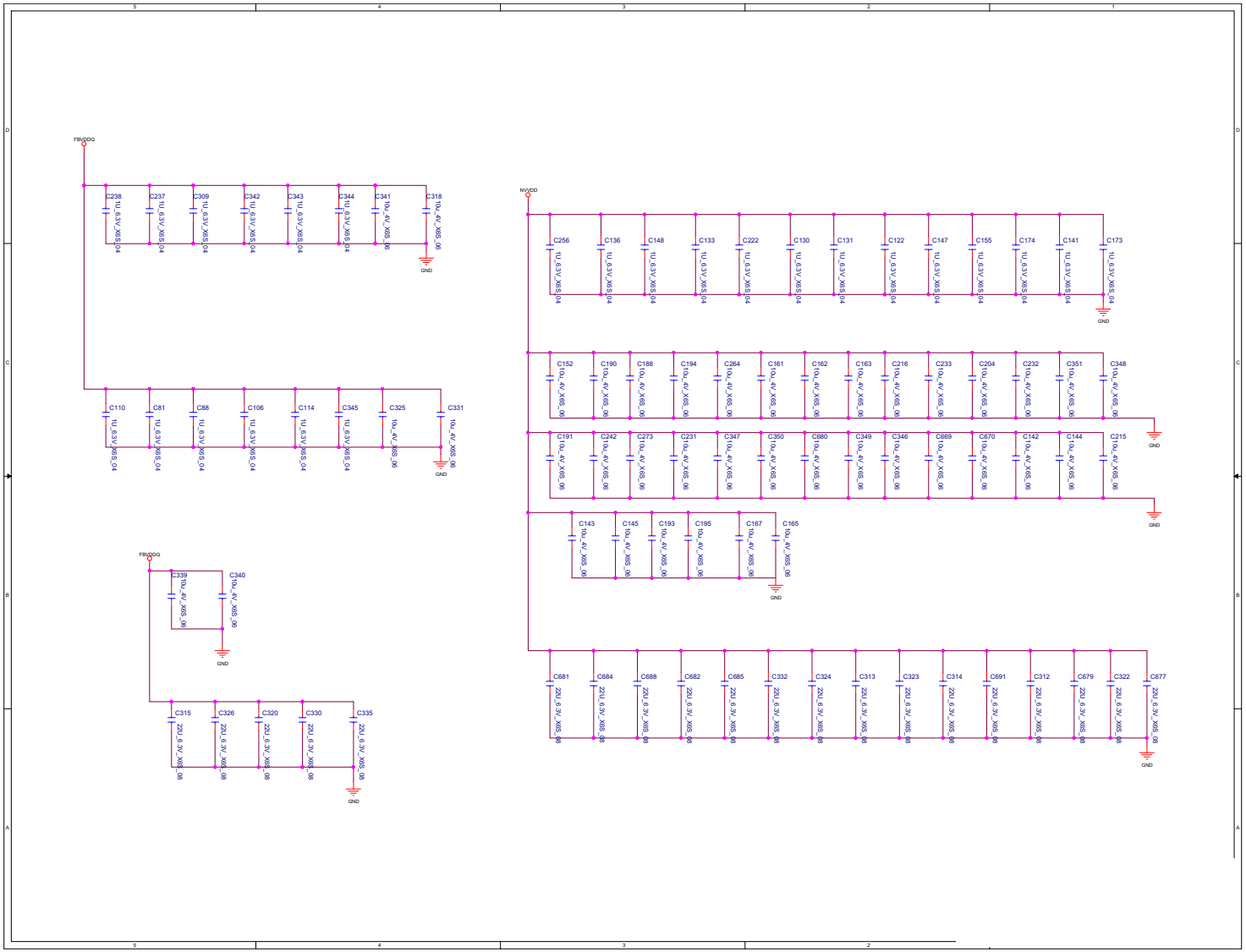

Sheet 16 of 62
VGA NVVDD Coupling

Straps and XTAL

Sheet 17 of 62
Straps and XTAL

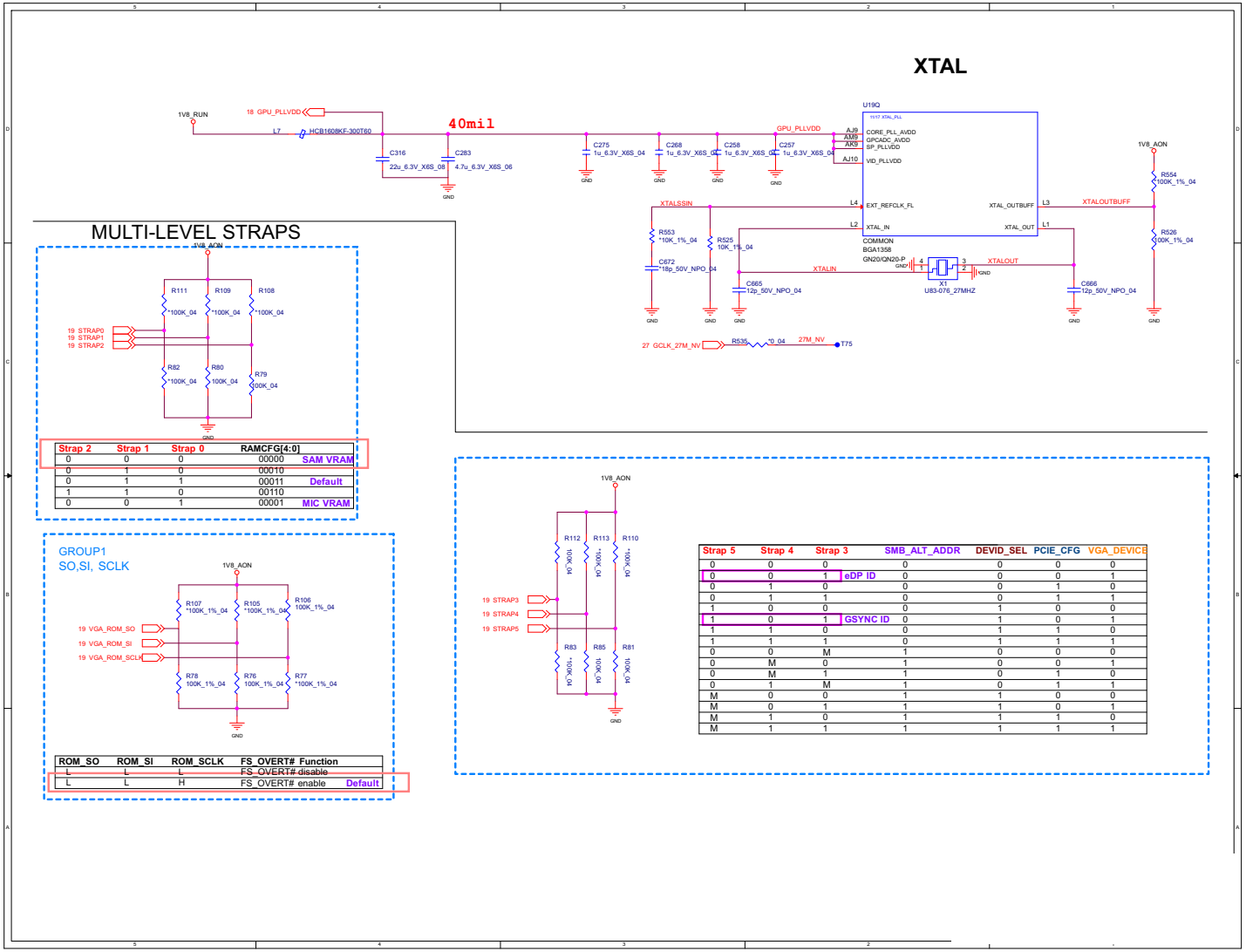

Strap 2	Strap 1	Strap 0	RAMCFG[4:0]	
0	0	0	00000	SAM VRAM
0	1	0	00010	
0	1	1	00011	Default
1	1	0	00110	
0	0	1	00001	MIC VRAM

ROM_SO	ROM_SI	ROM_SCLK	FS_OVERT# Function	
L	L	L	FS_OVERT# disable	
L	L	H	FS_OVERT# enable	Default

Strap 5	Strap 4	Strap 3		SMB_ALT_ADDR	DEVID_SEL	PCIE_CFG	VGA_DEVICE
0	0	0		0	0	0	0
0	0	1	eDP ID	0	0	0	1
0	1	0		0	0	1	0
0	1	1		0	0	1	1
1	0	0		0	1	0	0
1	0	1	GSYNC ID	0	1	0	1
1	1	0		0	1	1	0
1	1	1		0	1	1	1
0	0	M		1	0	0	0
0	M	0		1	0	0	1
0	M	1		1	0	1	0
0	1	M		1	0	1	1
M	0	0		1	1	0	0
M	0	1		1	1	0	1
M	1	0		1	1	1	0
M	1	1		1	1	1	1

IFP I/O Interface

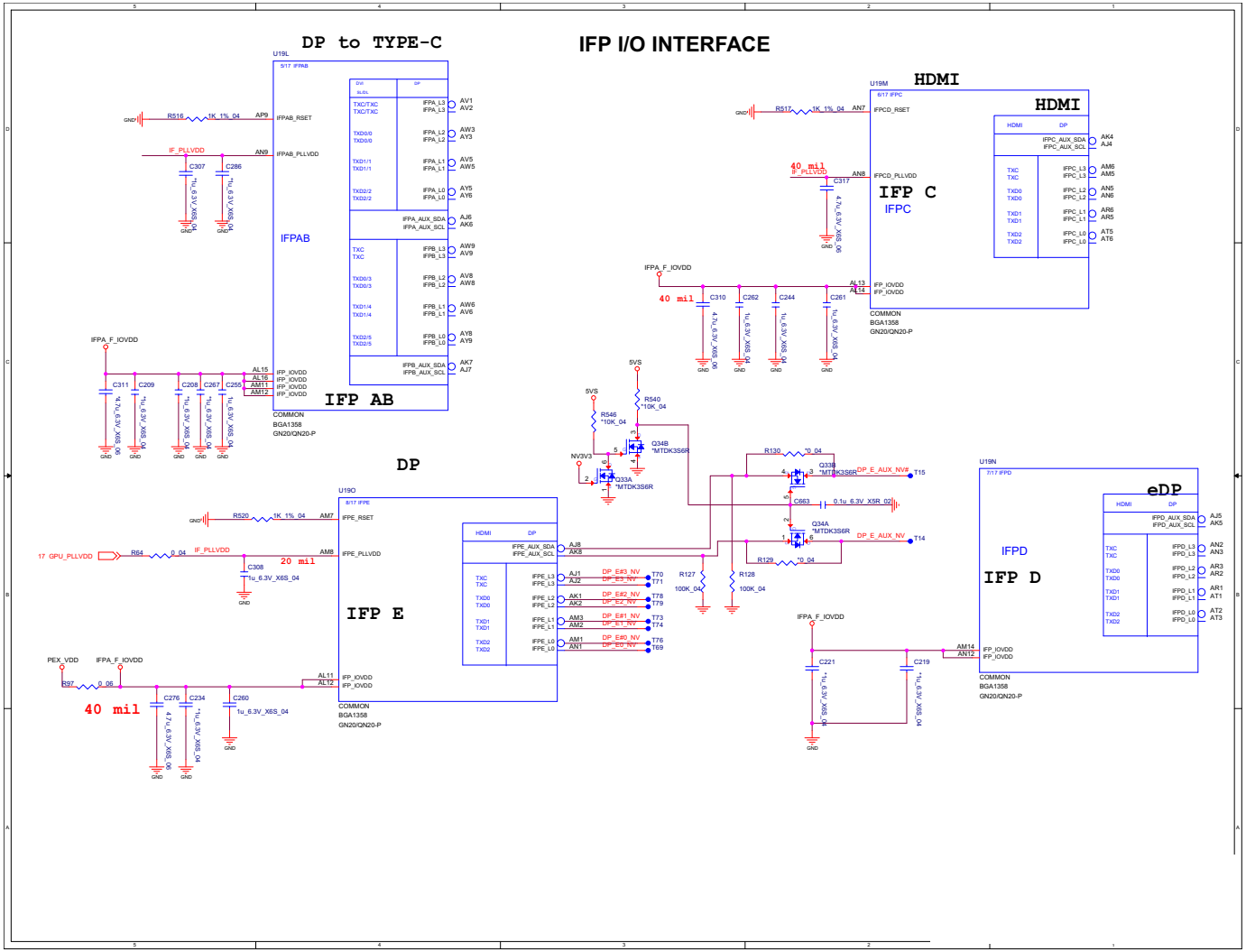

Sheet 18 of 62
IFP I/O Interface

Misc - GPIO, I2C and VBIOS

Sheet 19 of 62
Misc - GPIO, I2C, and VBIOS

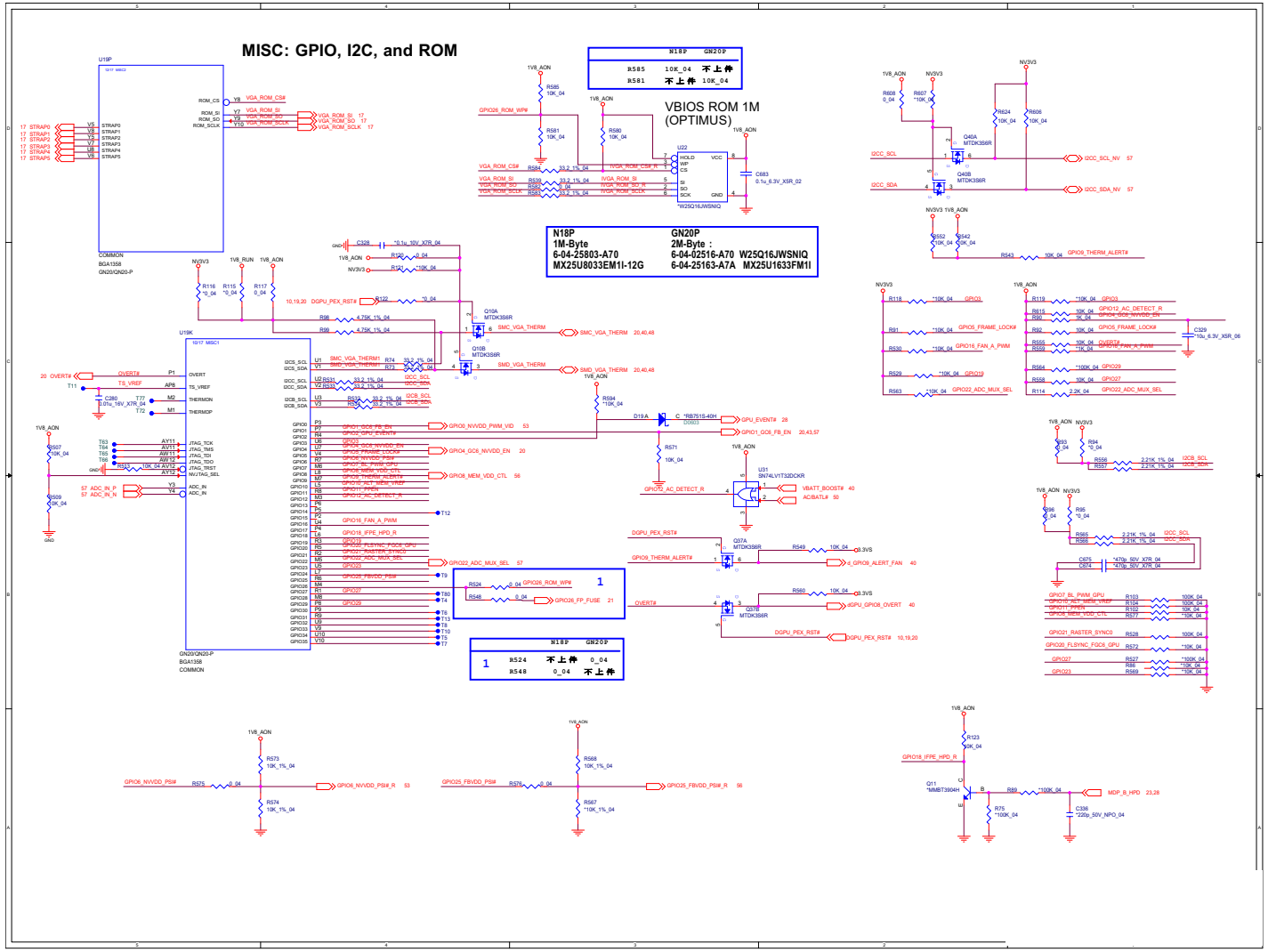

NVIDIA Power Sequence

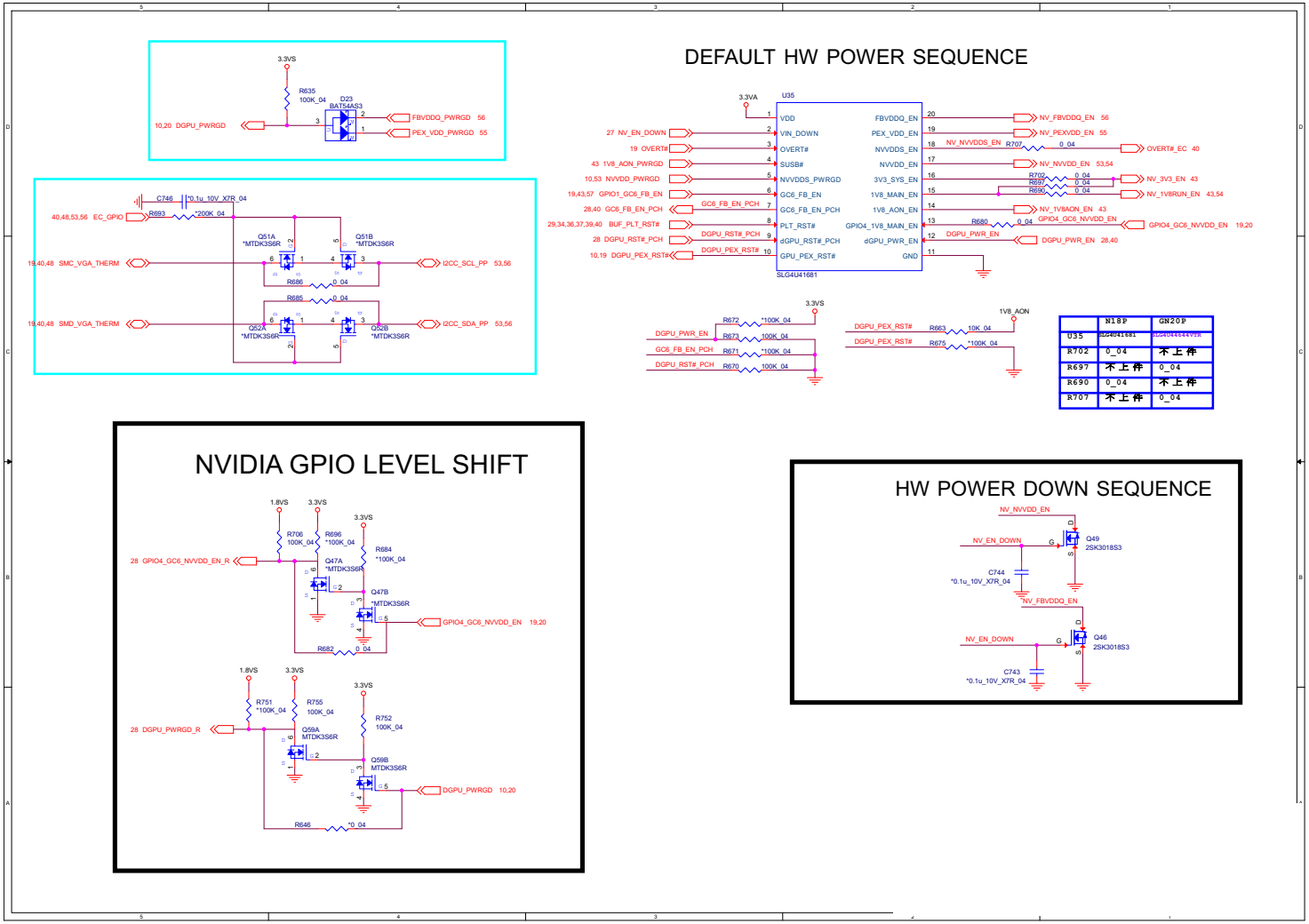

	N18P	GN20P
U35	SLG4U41681	SLG4U41681VTB
R702	0_04	不上件
R697	不上件	0_04
R690	0_04	不上件
R707	不上件	0_04

Sheet 20 of 62
NVIDIA Power Sequence

GPU NVVDD, FBVDDQ

Sheet 21 of 62
GPU NVVDD, FBVDDQ

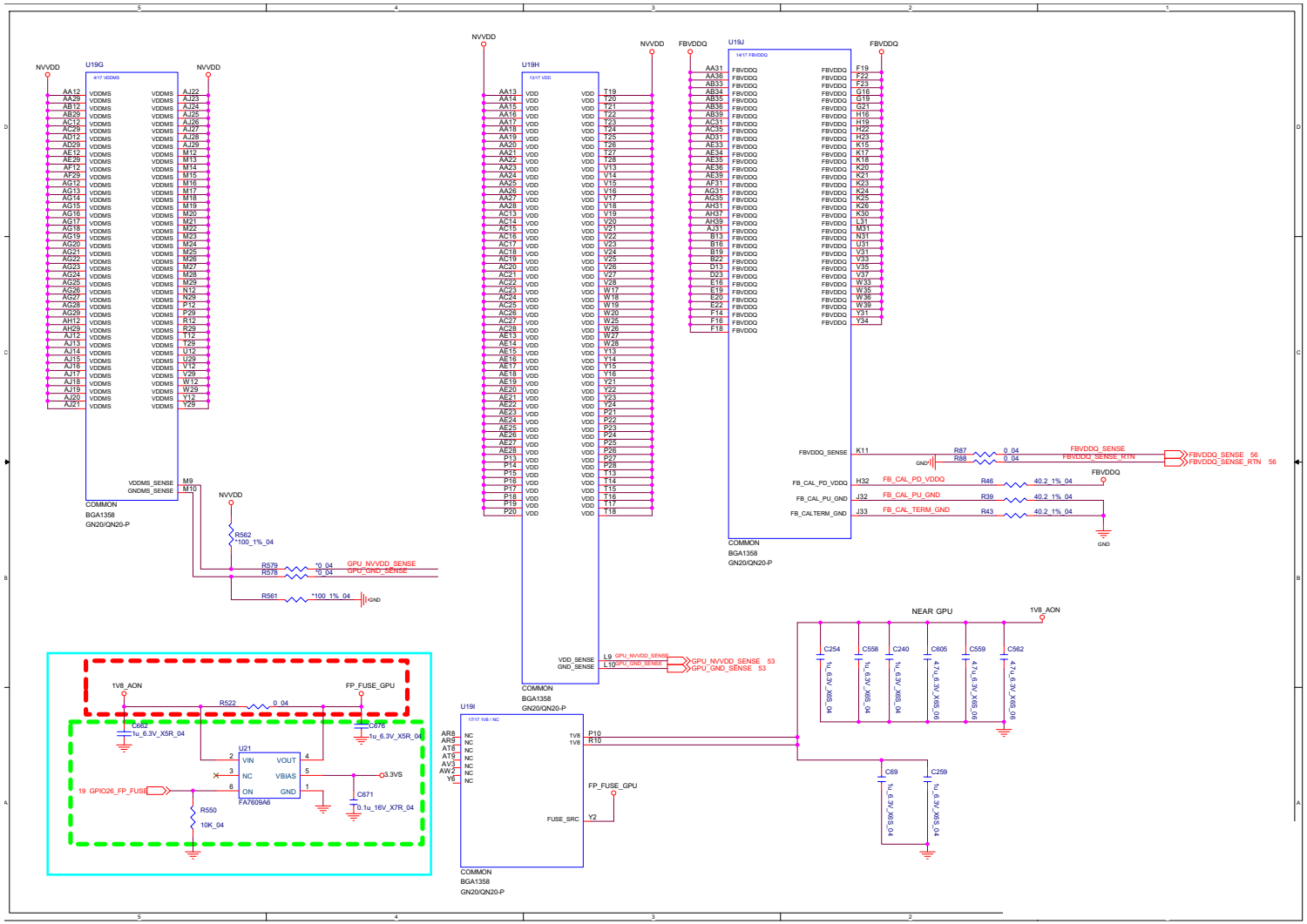

GPU GND

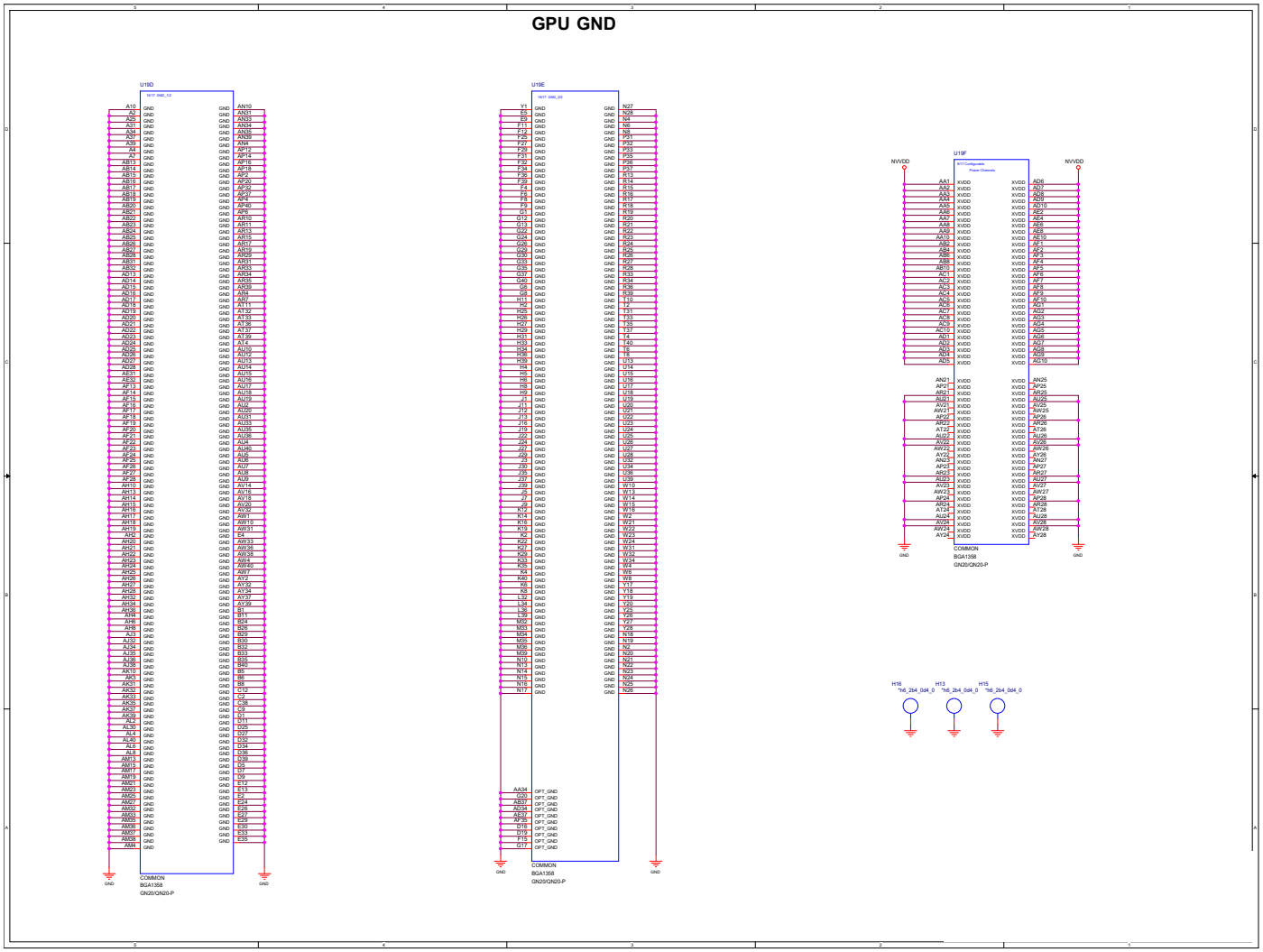

Sheet 22 of 62
GPU GND

mDP

Sheet 23 of 62
mDP

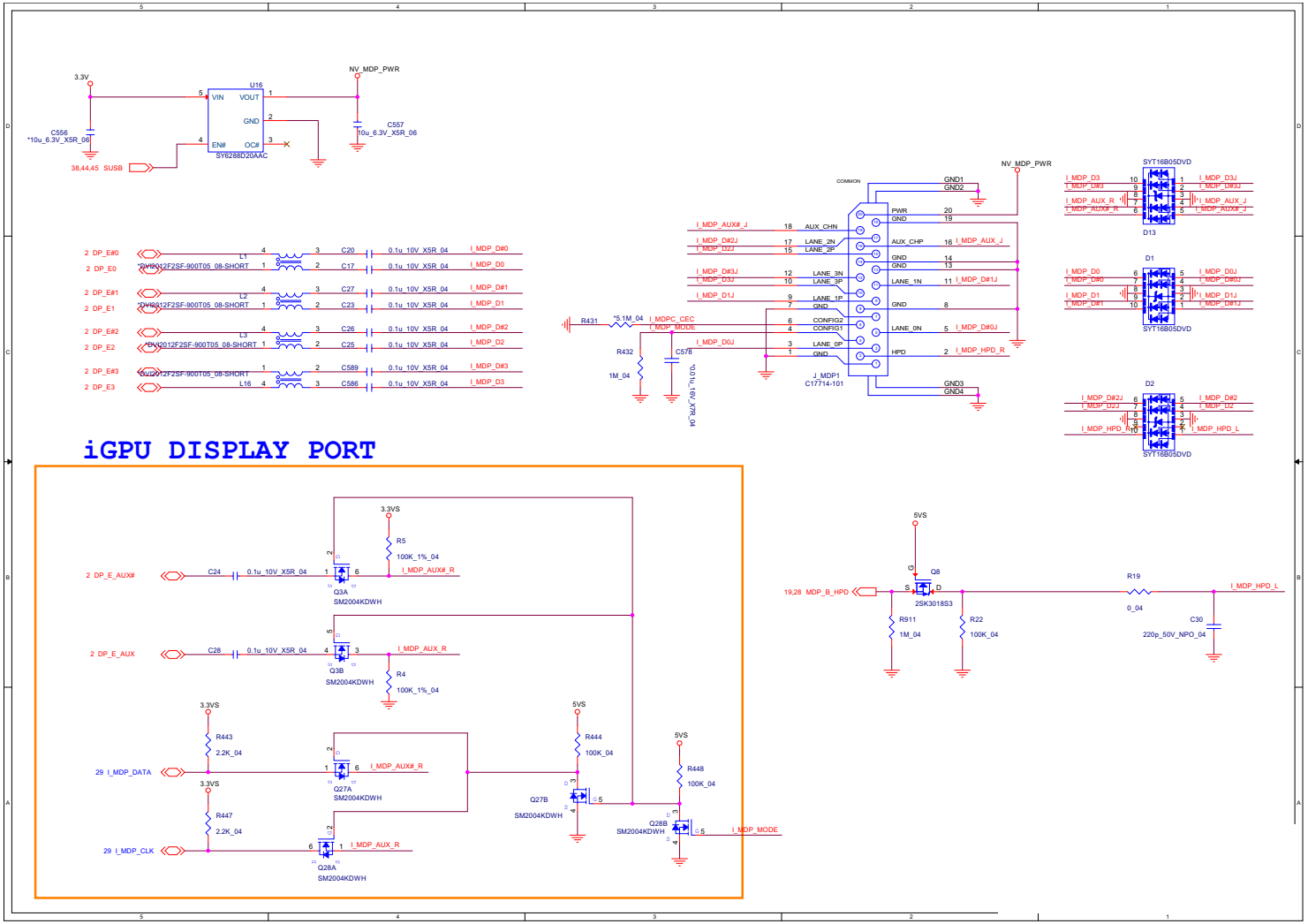

Panel, Inverter

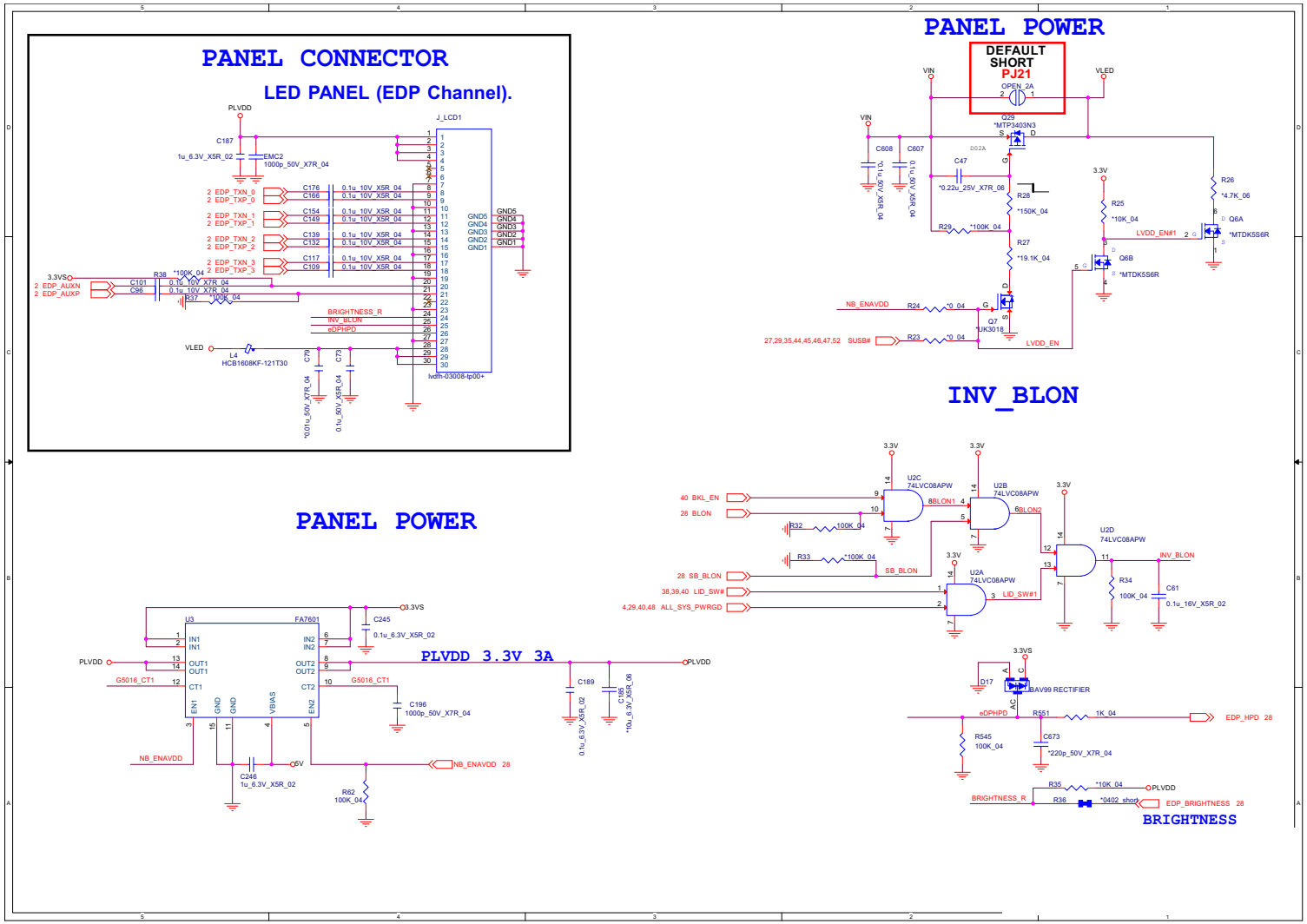

Sheet 24 of 62
Panel, Inverter

HDMI

Sheet 25 of 62
HDMI

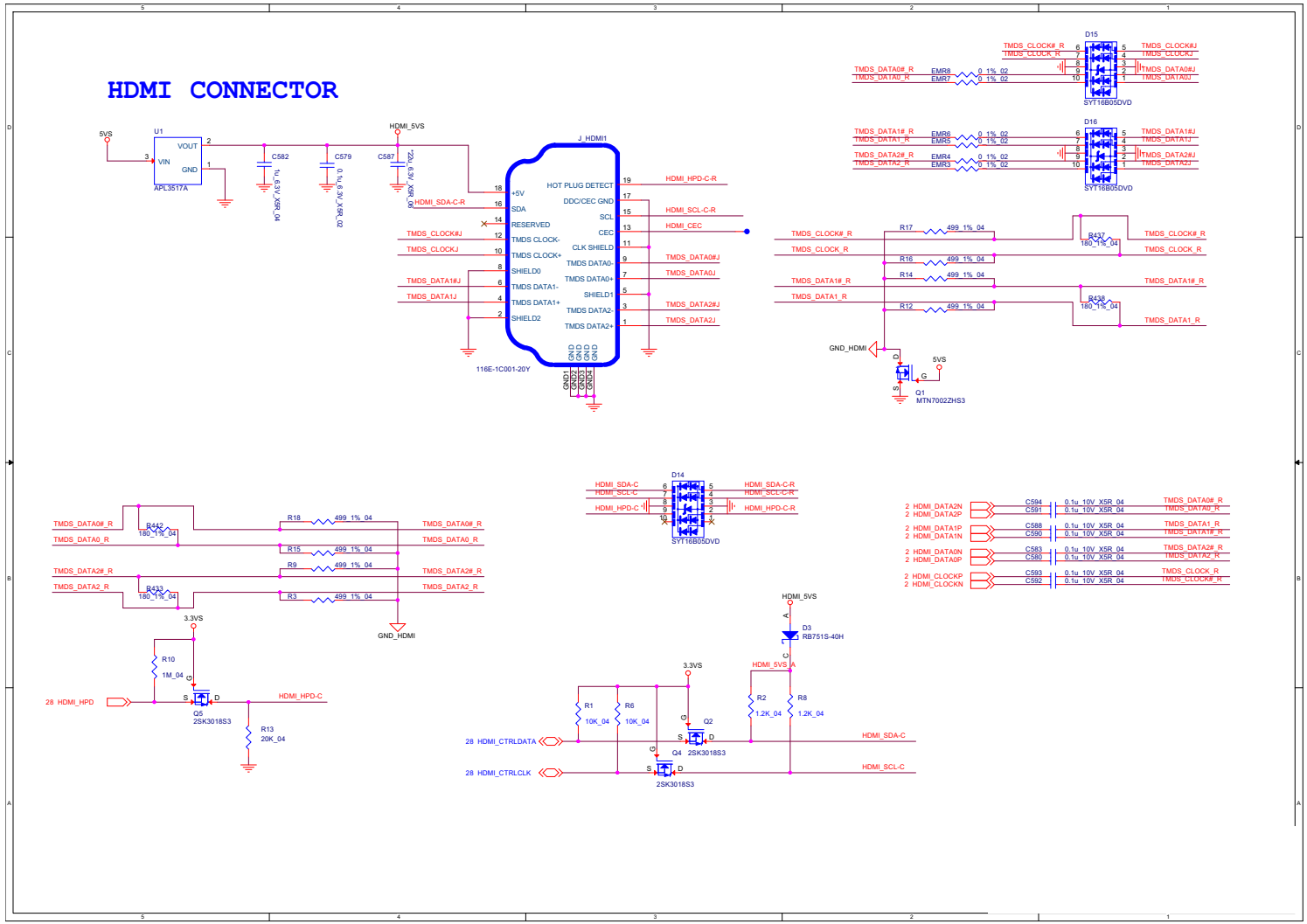

PCH 1/7

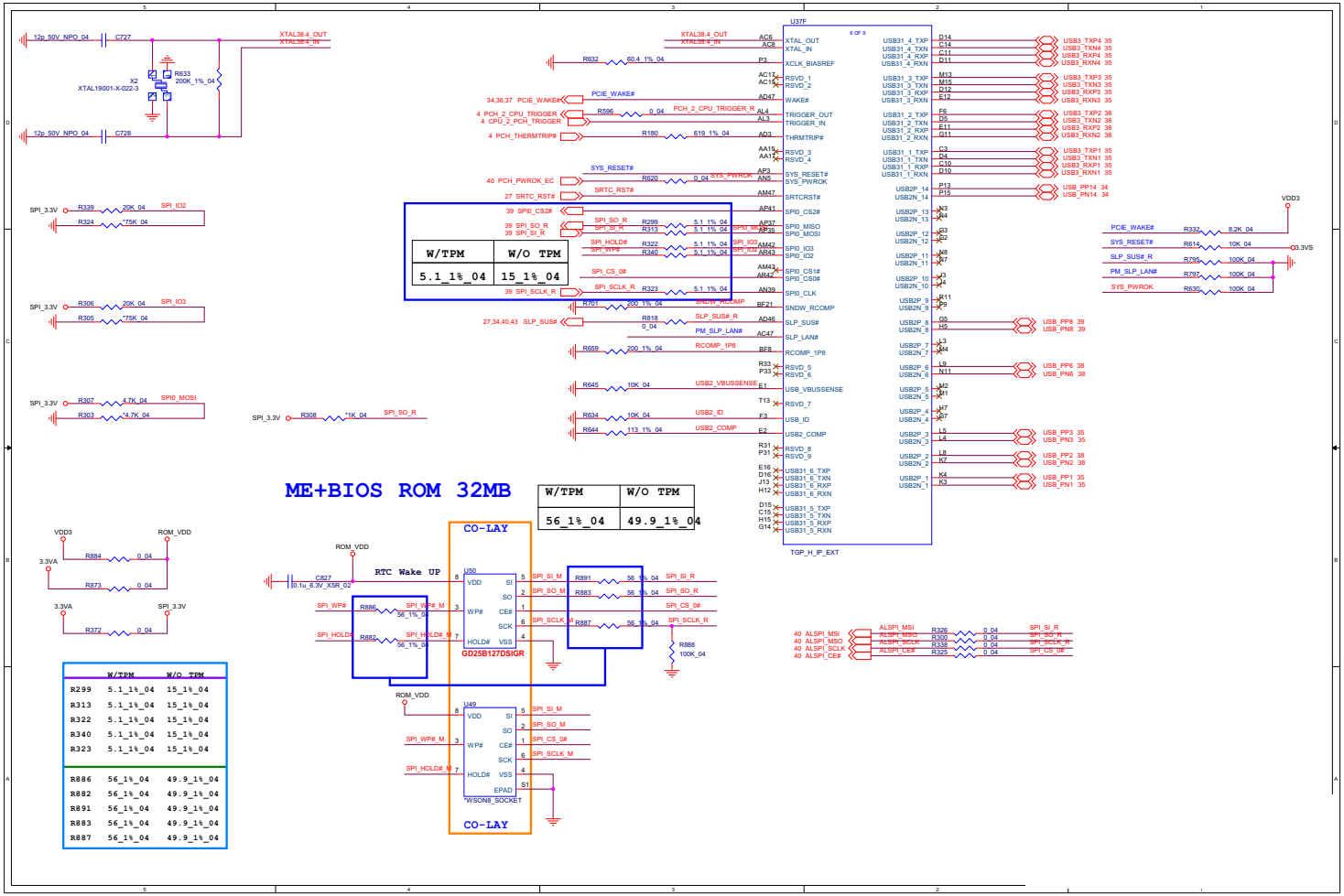

Sheet 26 of 62
PCH 1/7

PCH 2/7

Sheet 27 of 62
PCH 2/7

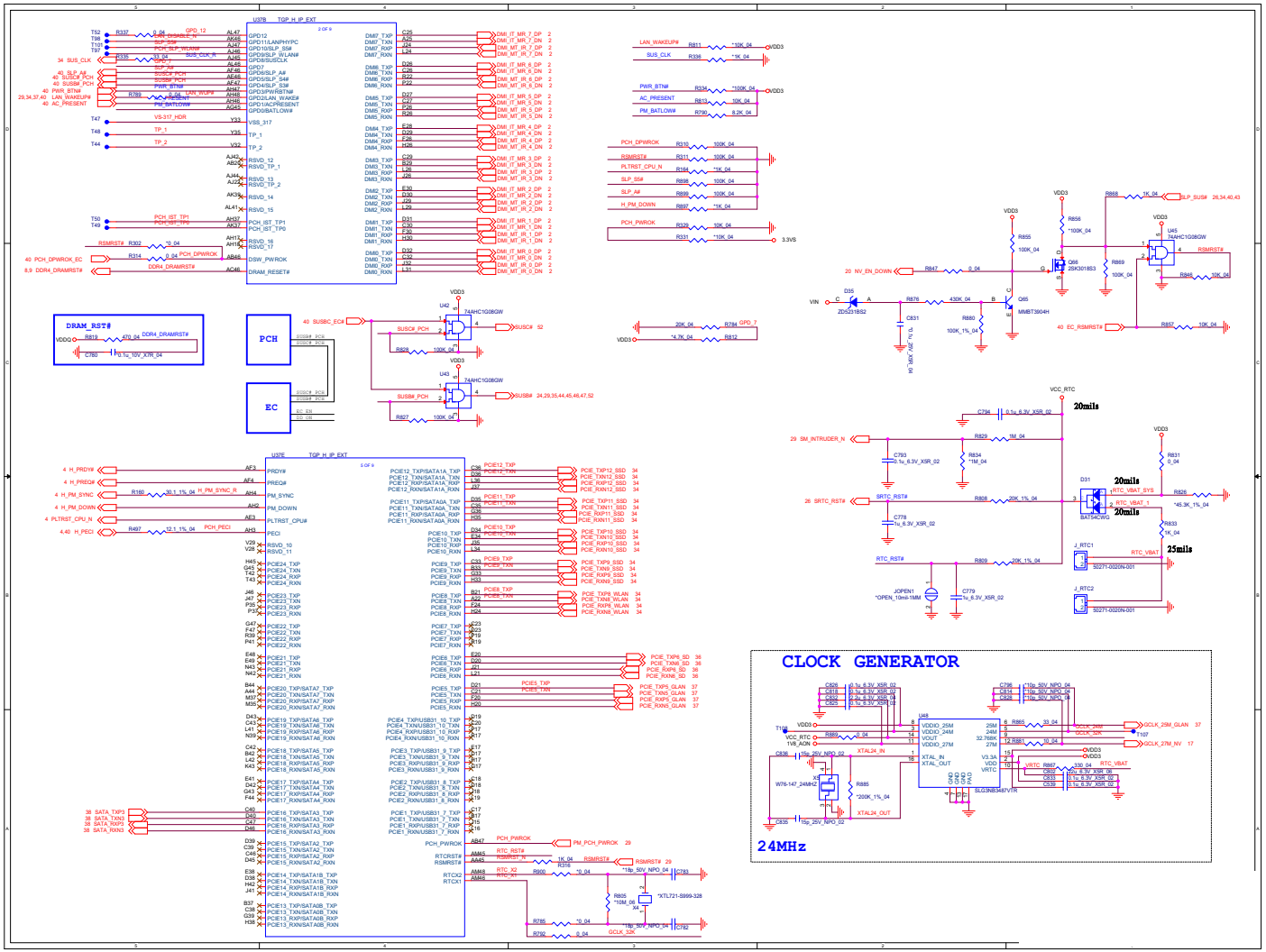

PCH 3/7

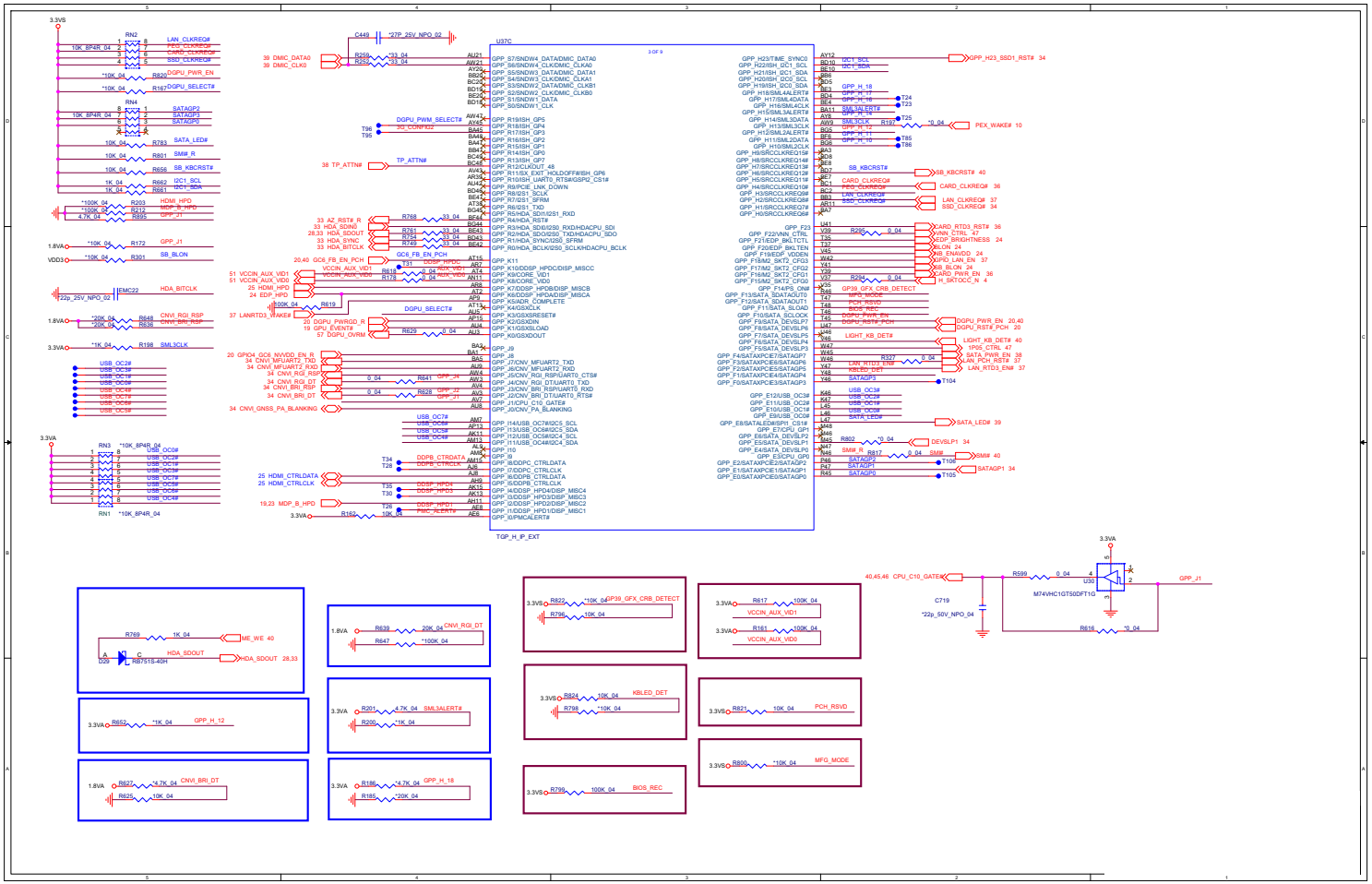

Sheet 28 of 62
PCH 3/7

PCH 4/7

Sheet 29 of 62
PCH 4/7

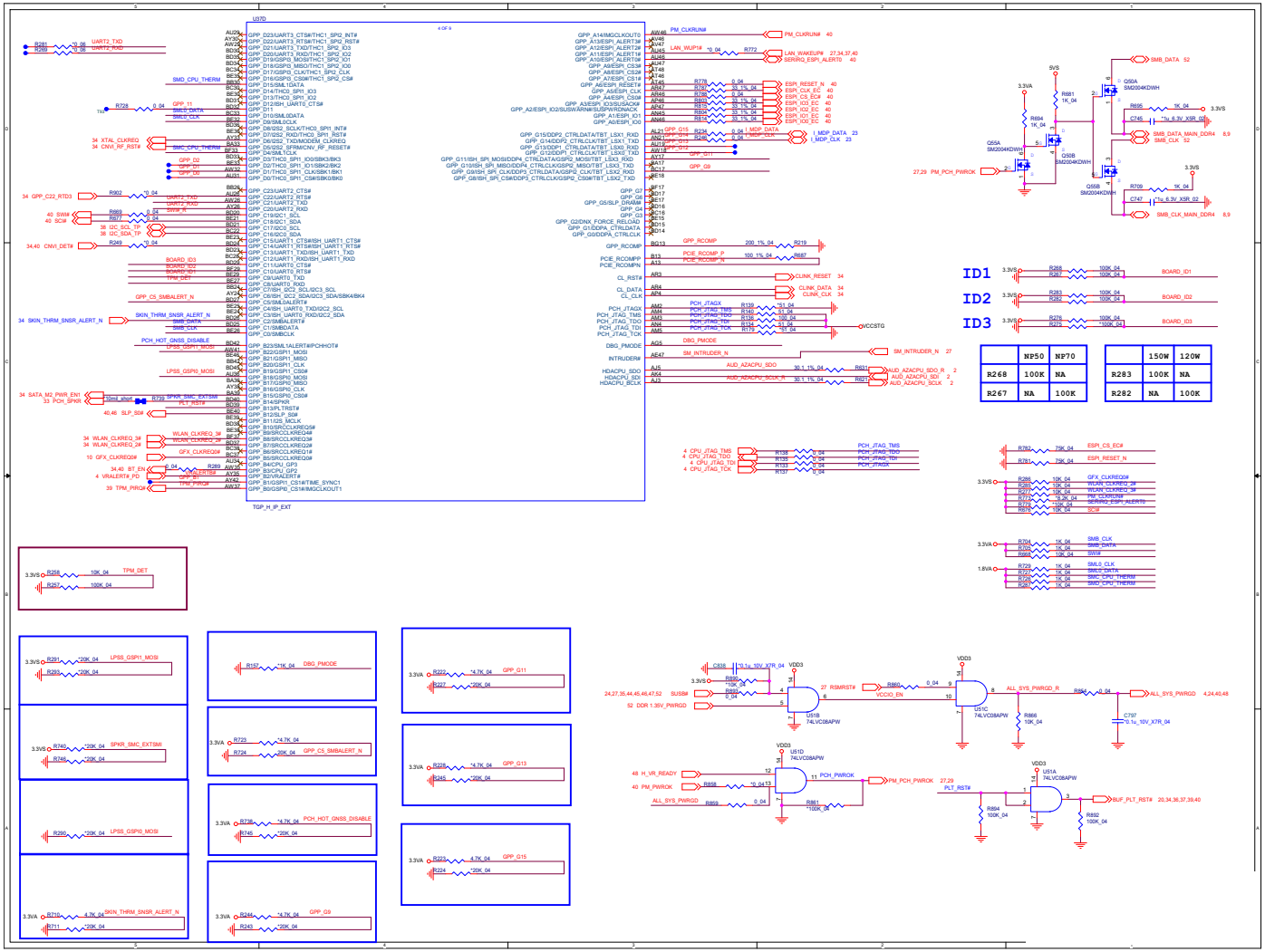

PCH 5/7

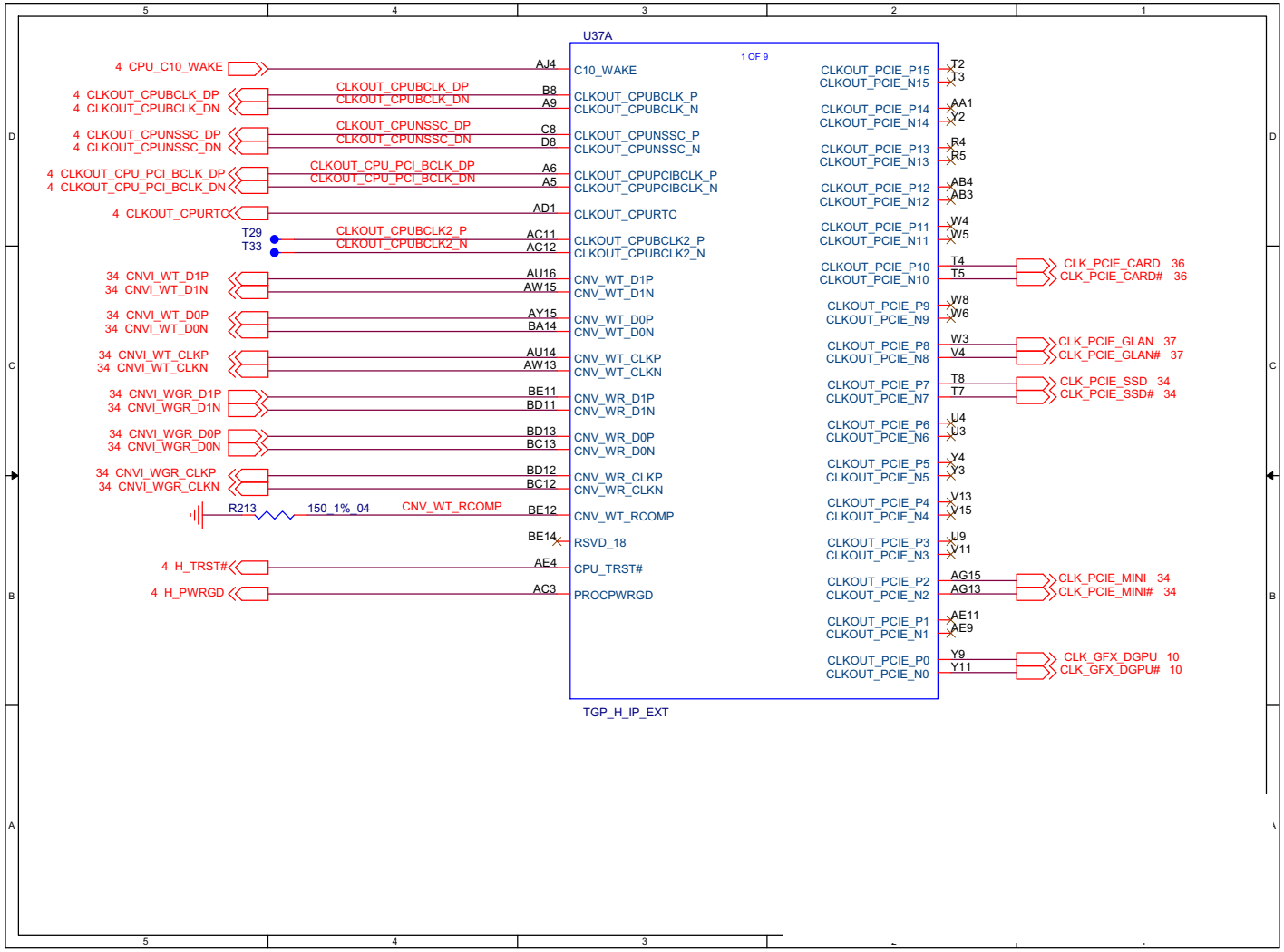

Sheet 30 of 62
PCH 5/7

PCH 6/7

Sheet 31 of 62
PCH 6/7

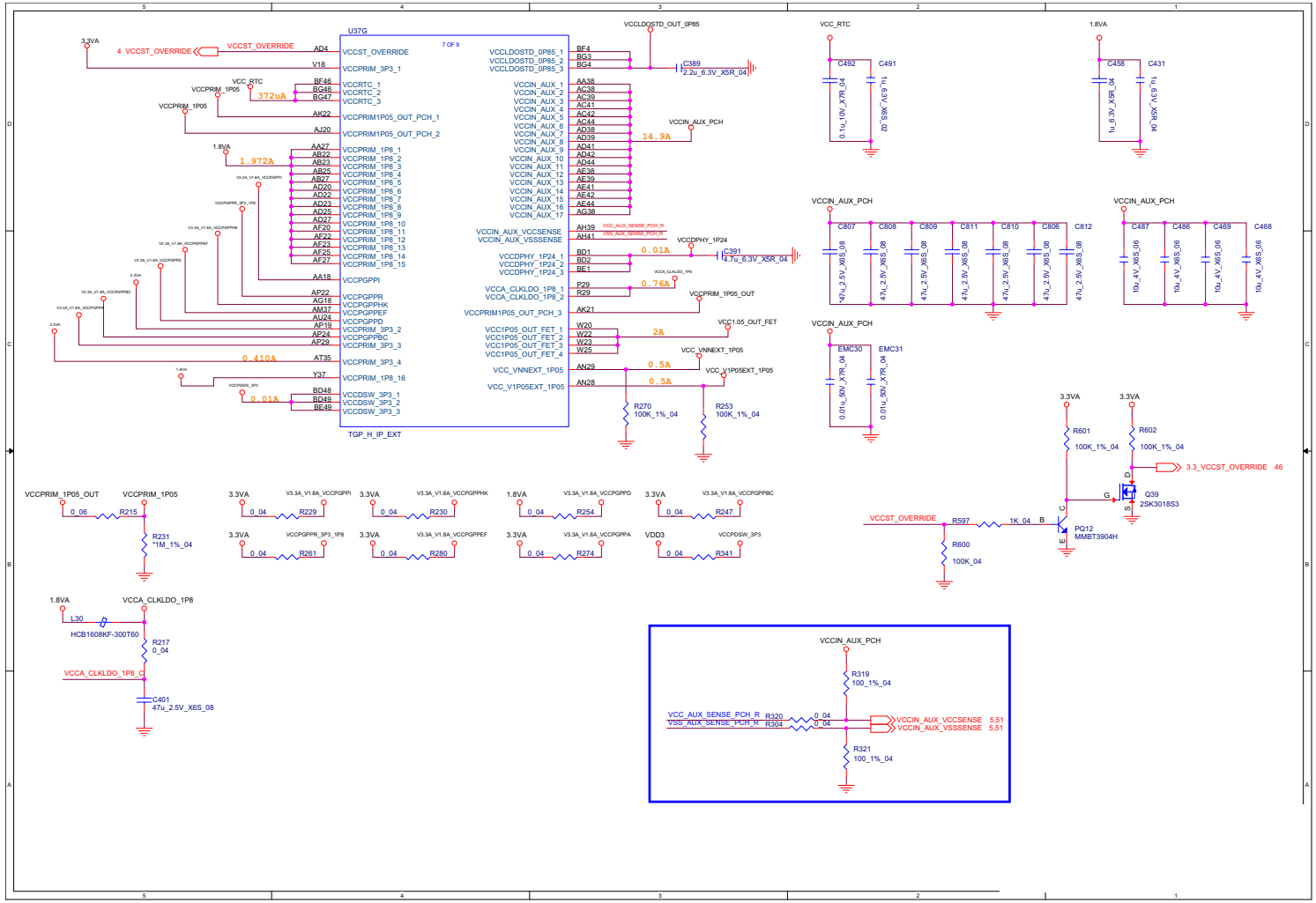

PCH 7/7

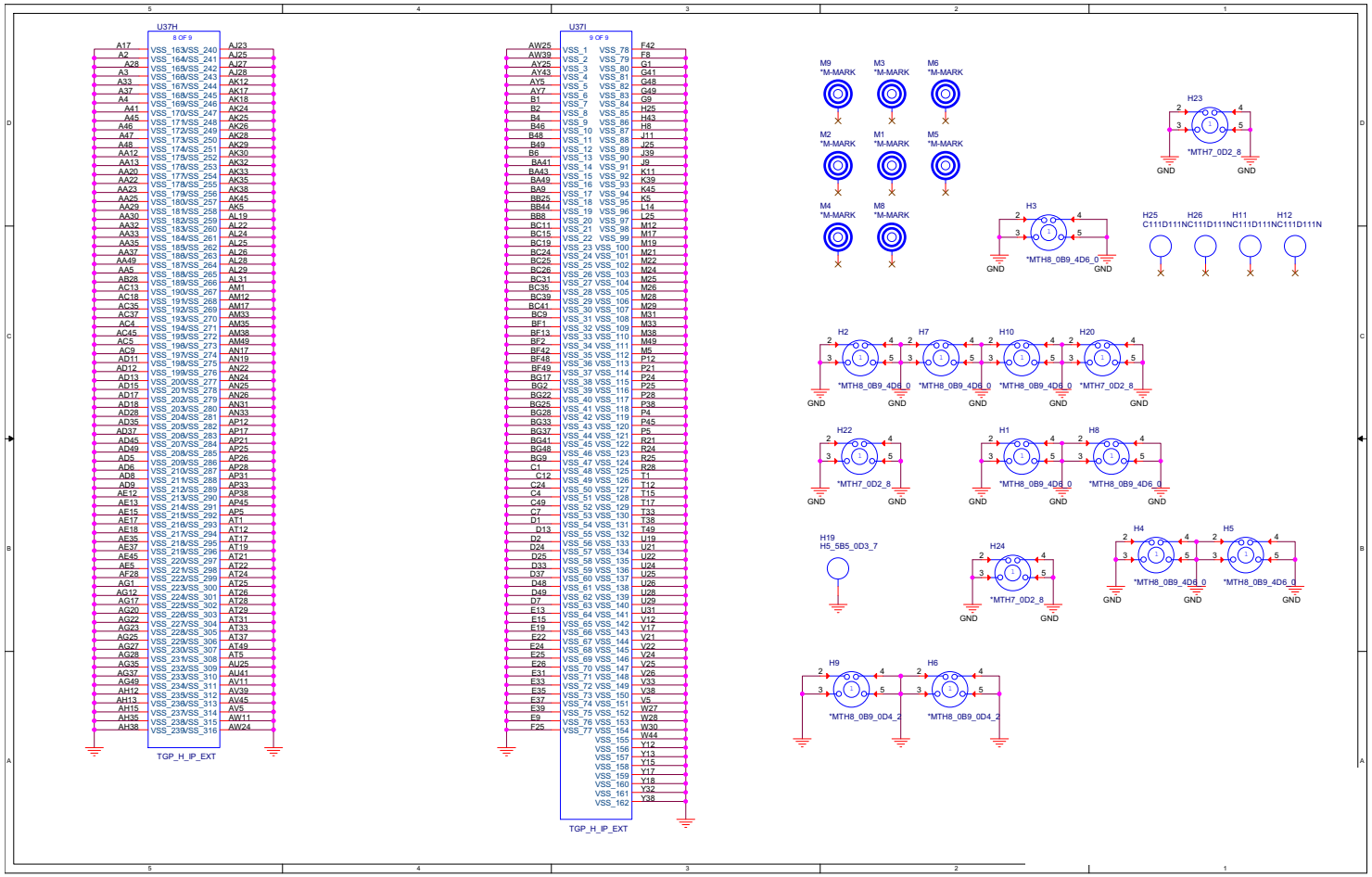

Sheet 32 of 62
PCH 7/7

Audio Codec

Sheet 33 of 62
Audio Codec

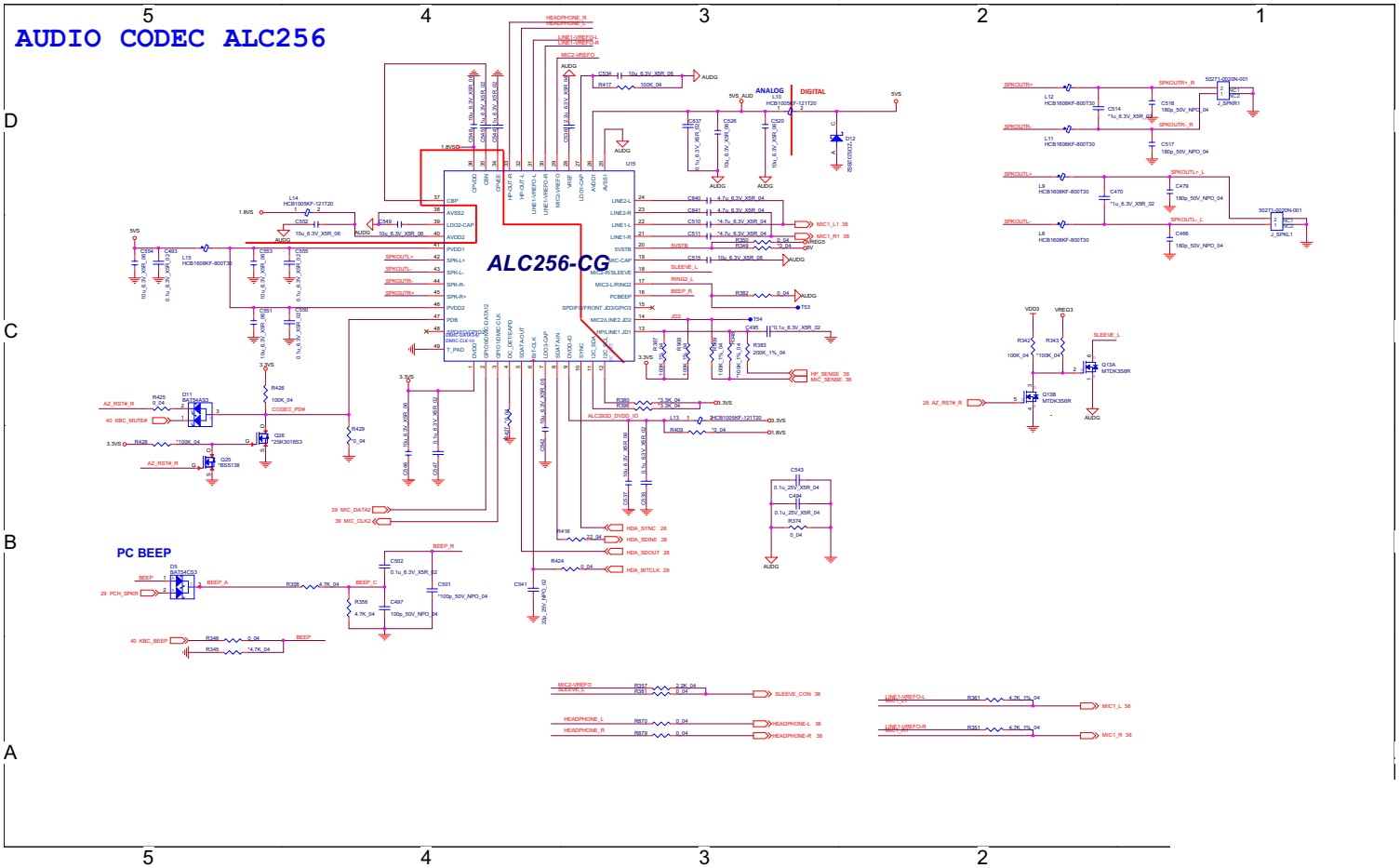

M.2 WLAN+BT, PCIE 4X SSD

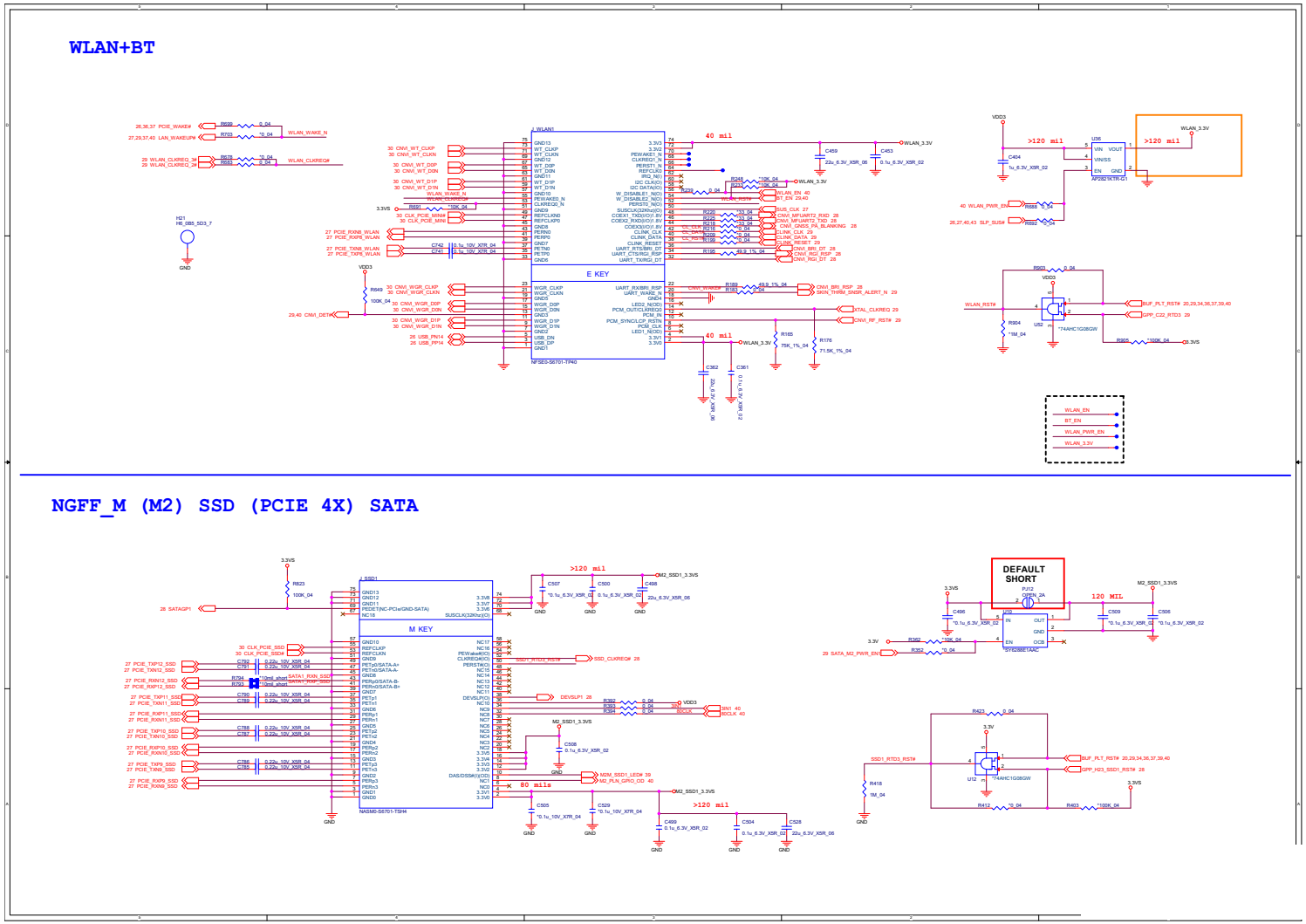

Sheet 34 of 62
M.2 WLAN+BT,
PCIE 4X SSD

Type-C & A

Sheet 35 of 62
Type-C & A

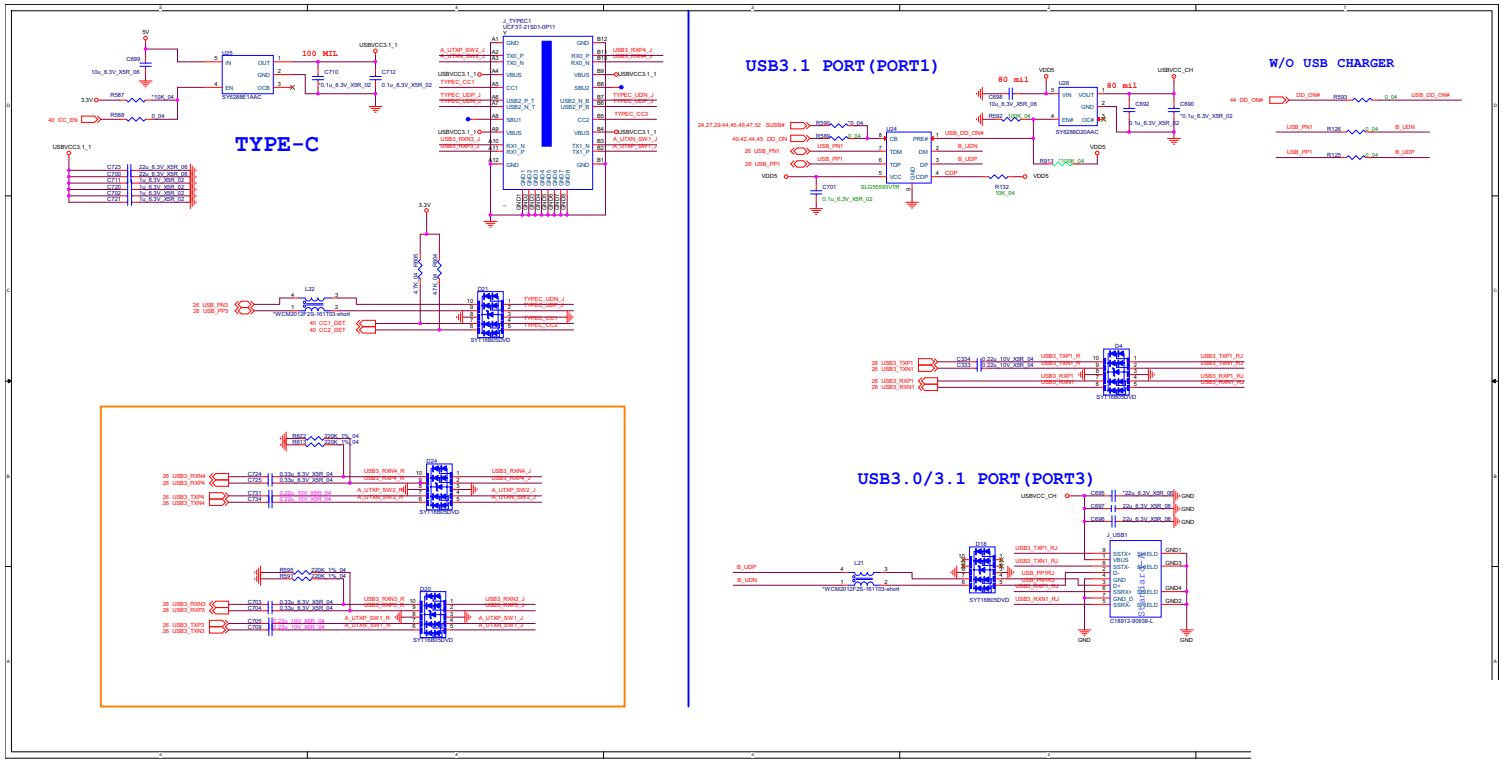

Card Reader RTS5227S RTD3

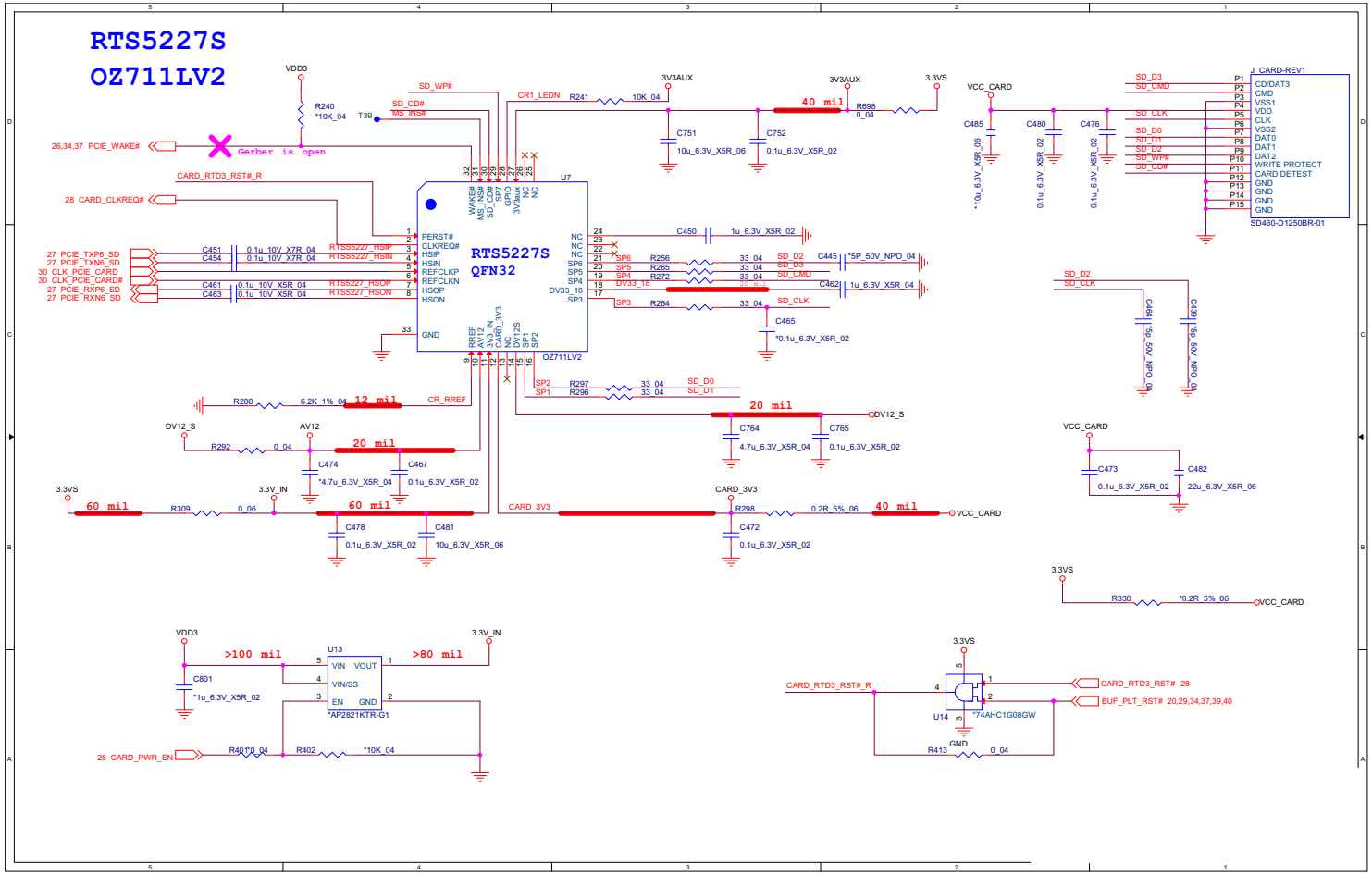

Sheet 36 of 62
Card Reader
RTS5227S RTD3

LAN RTL8111H RTD3

Sheet 37 of 62
LAN RTL8111H
RTD3

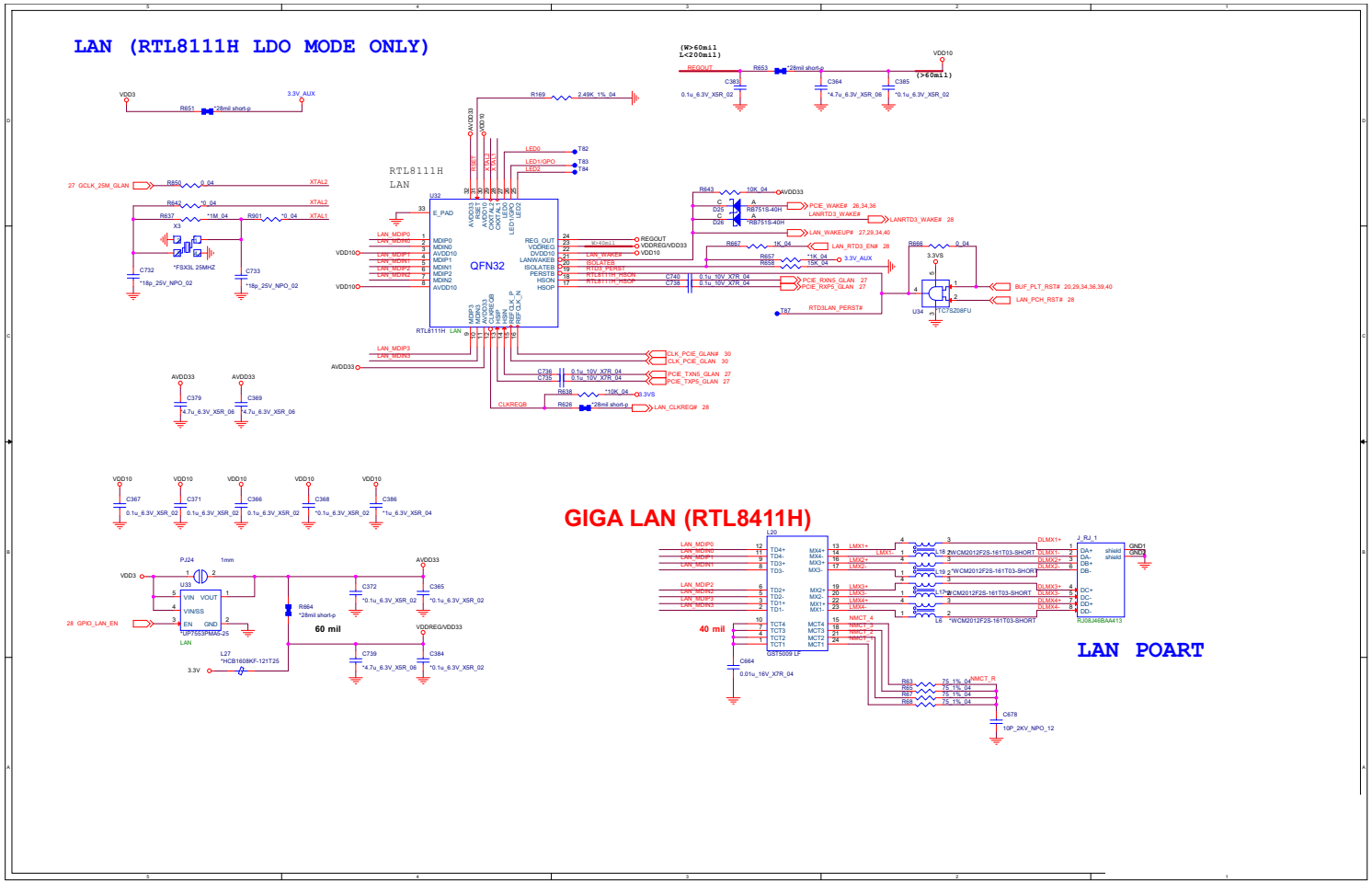

HDD, Click TP, Audio

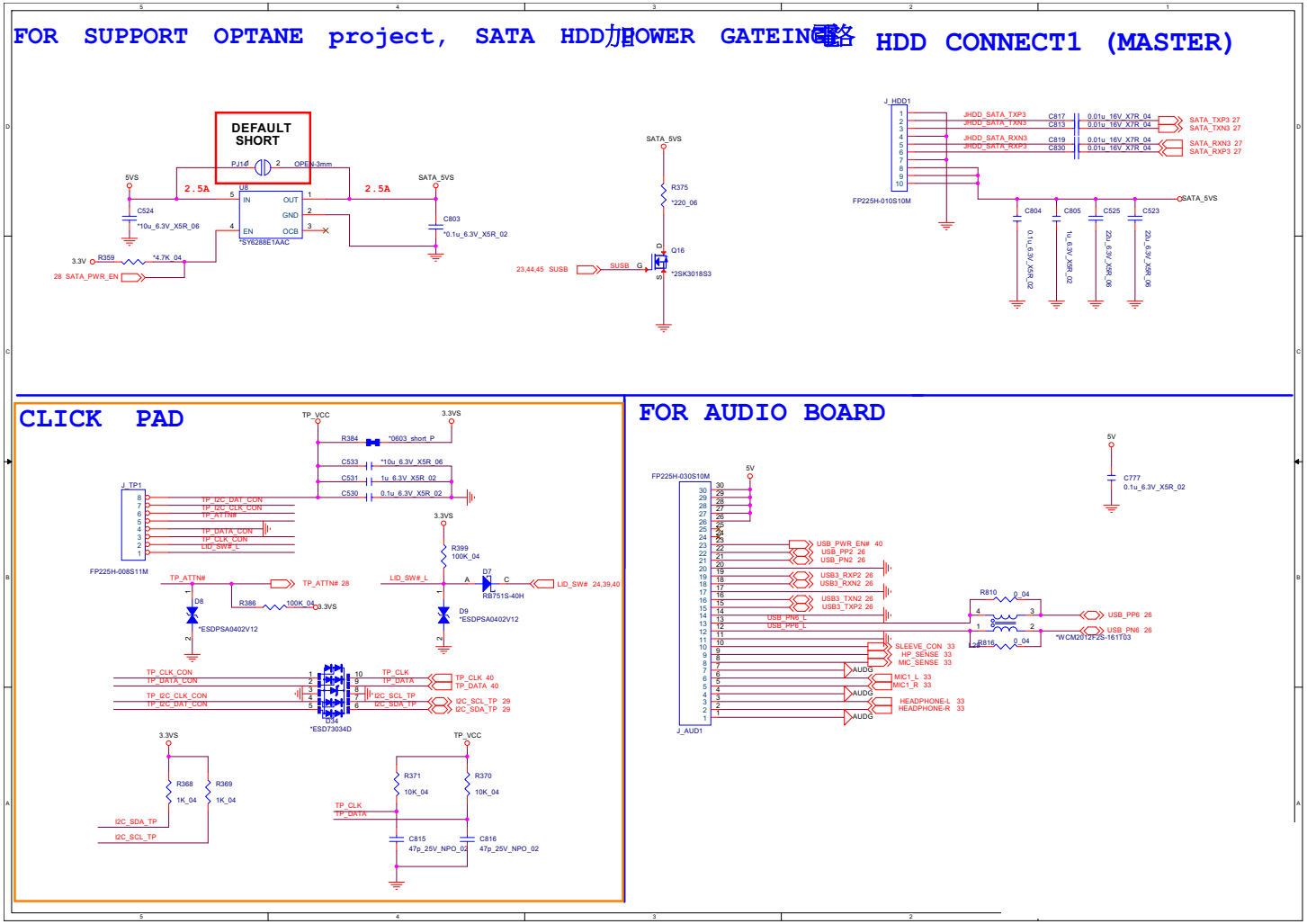

Sheet 38 of 62
HDD, Click TP, Audio

LED, CCD, TPM, Power SW Bd.

Sheet 39 of 62
LED, CCD, TPM, Power SW Bd.

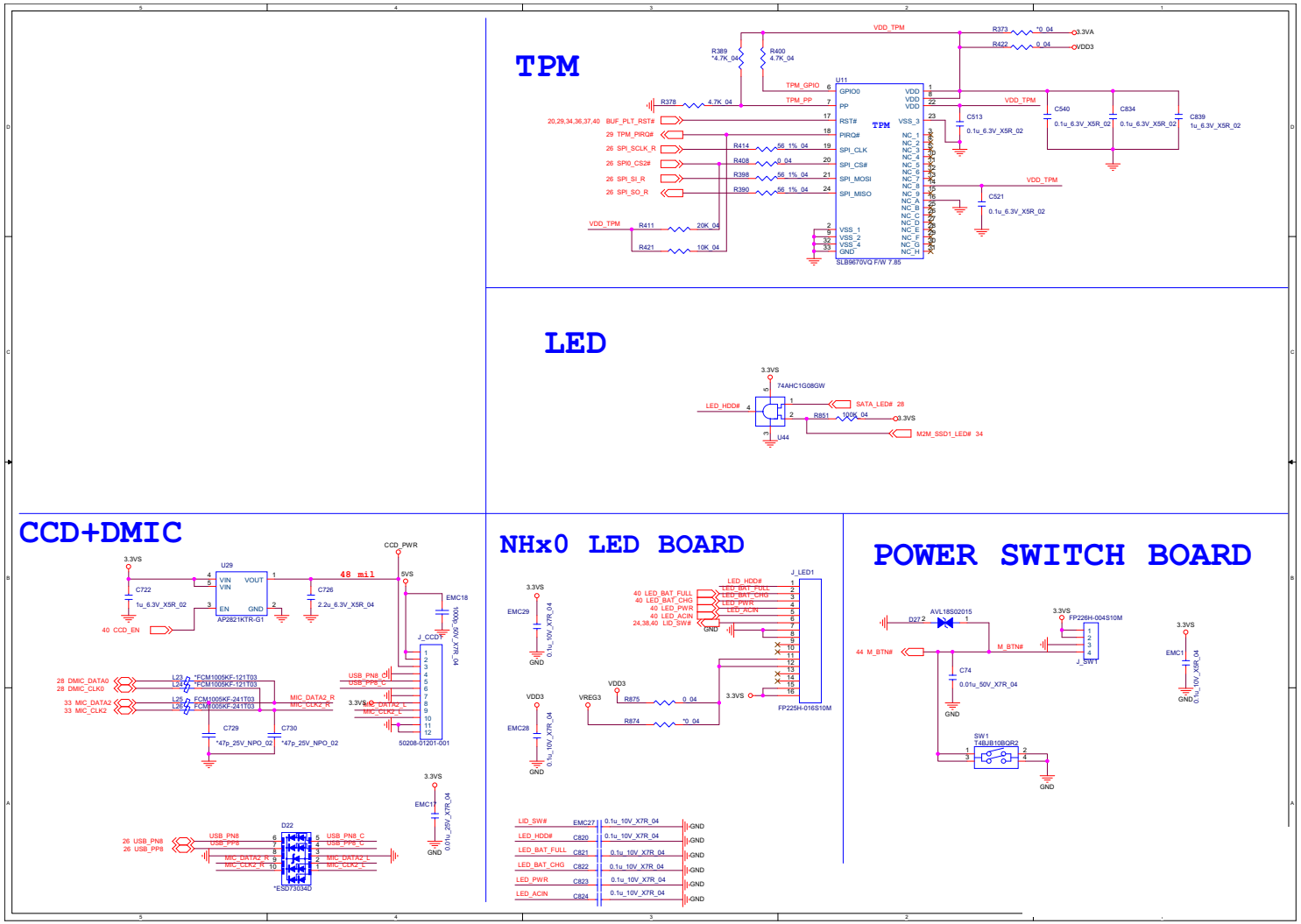

KBC-ITE IT5570

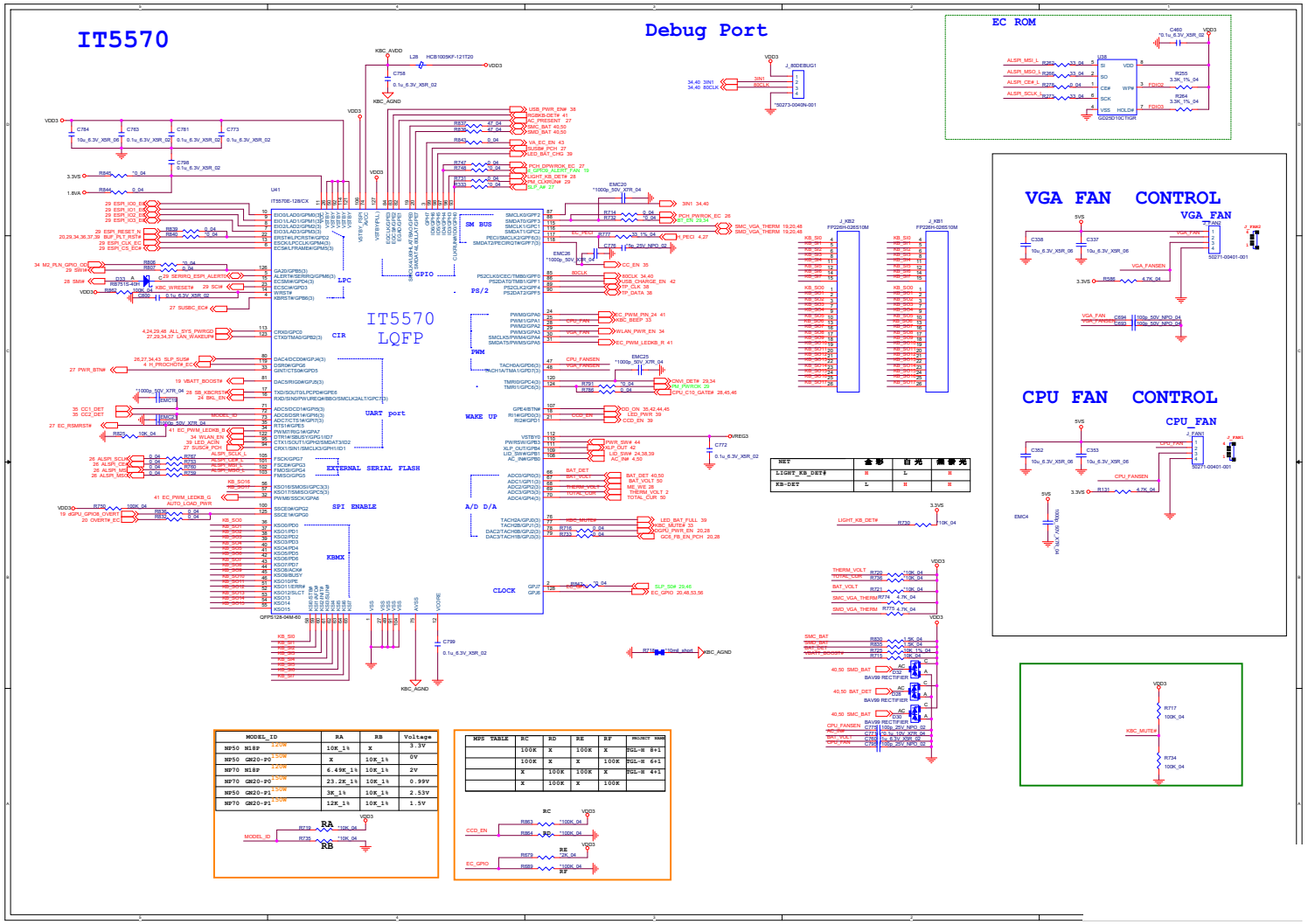

Sheet 40 of 62
KBC-ITE IT5570

RGB KB

Sheet 41 of 62
RGB KB

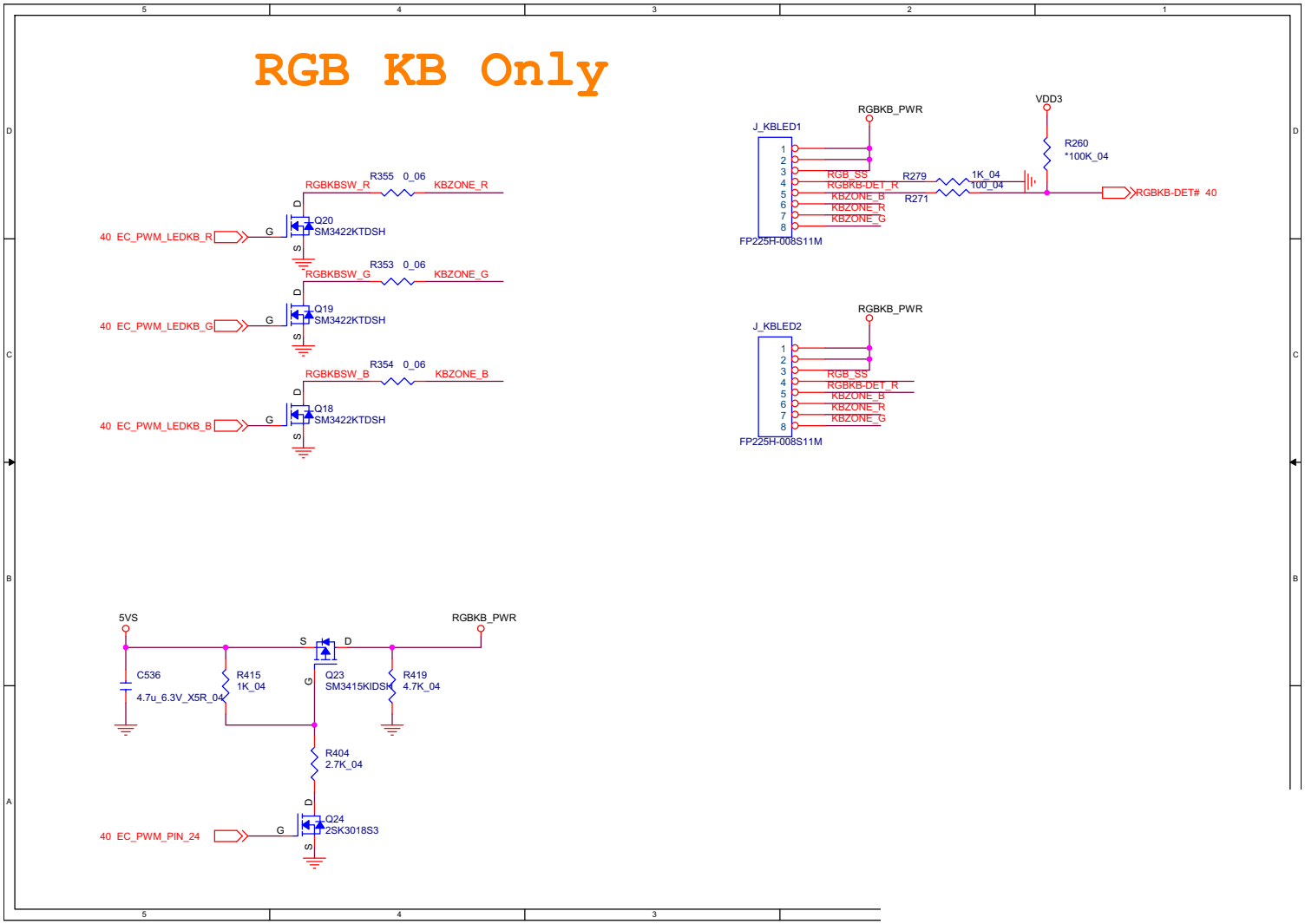

VDD3, VDD5

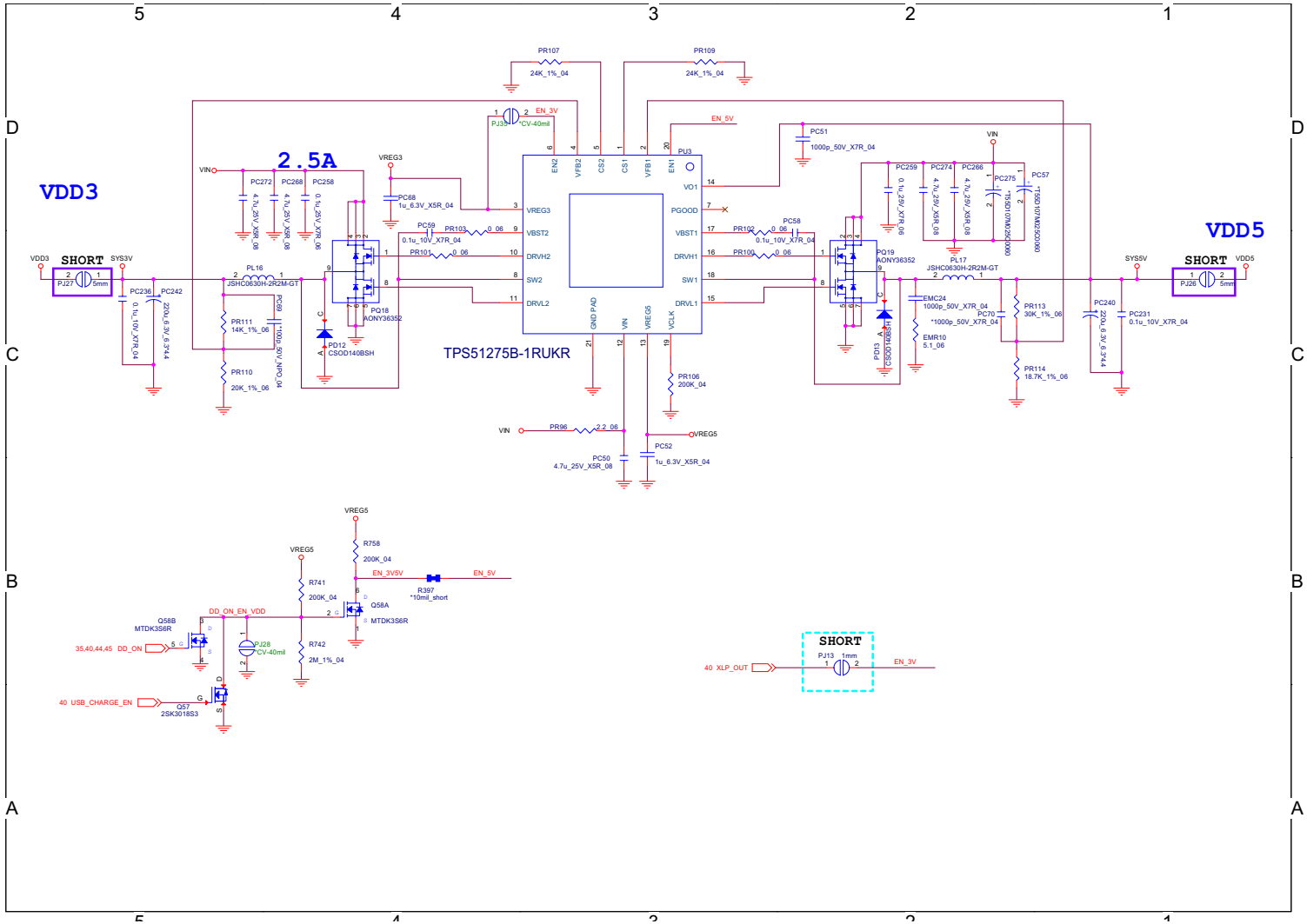

Sheet 42 of 62
VDD3, VDD5

1V8_RUN/AON, NV3V3, 3.3VA

Sheet 43 of 62
1V8_RUN/AON, NV3V3, 3.3VA

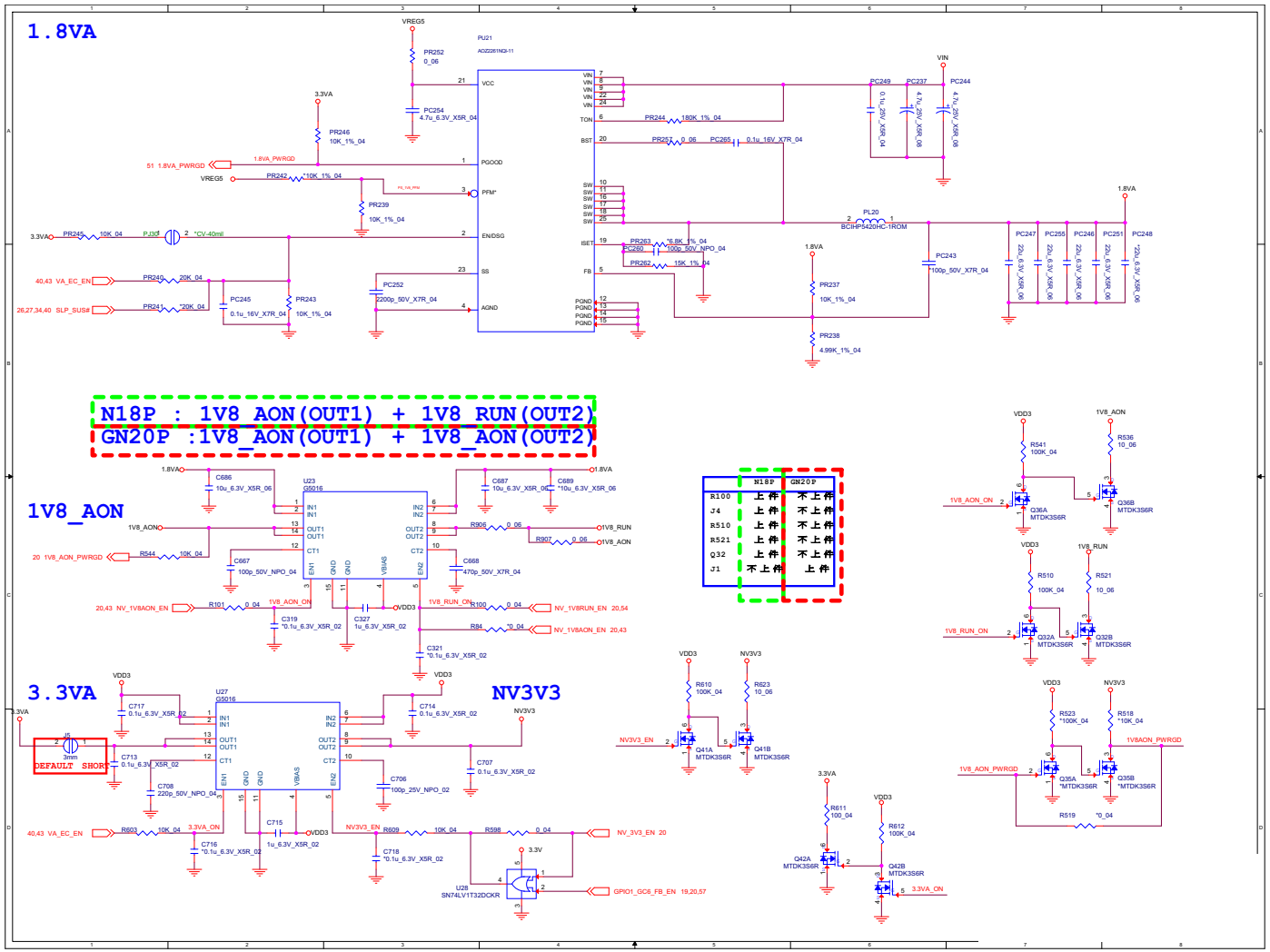

3V, 5V, 3VS, 5VS

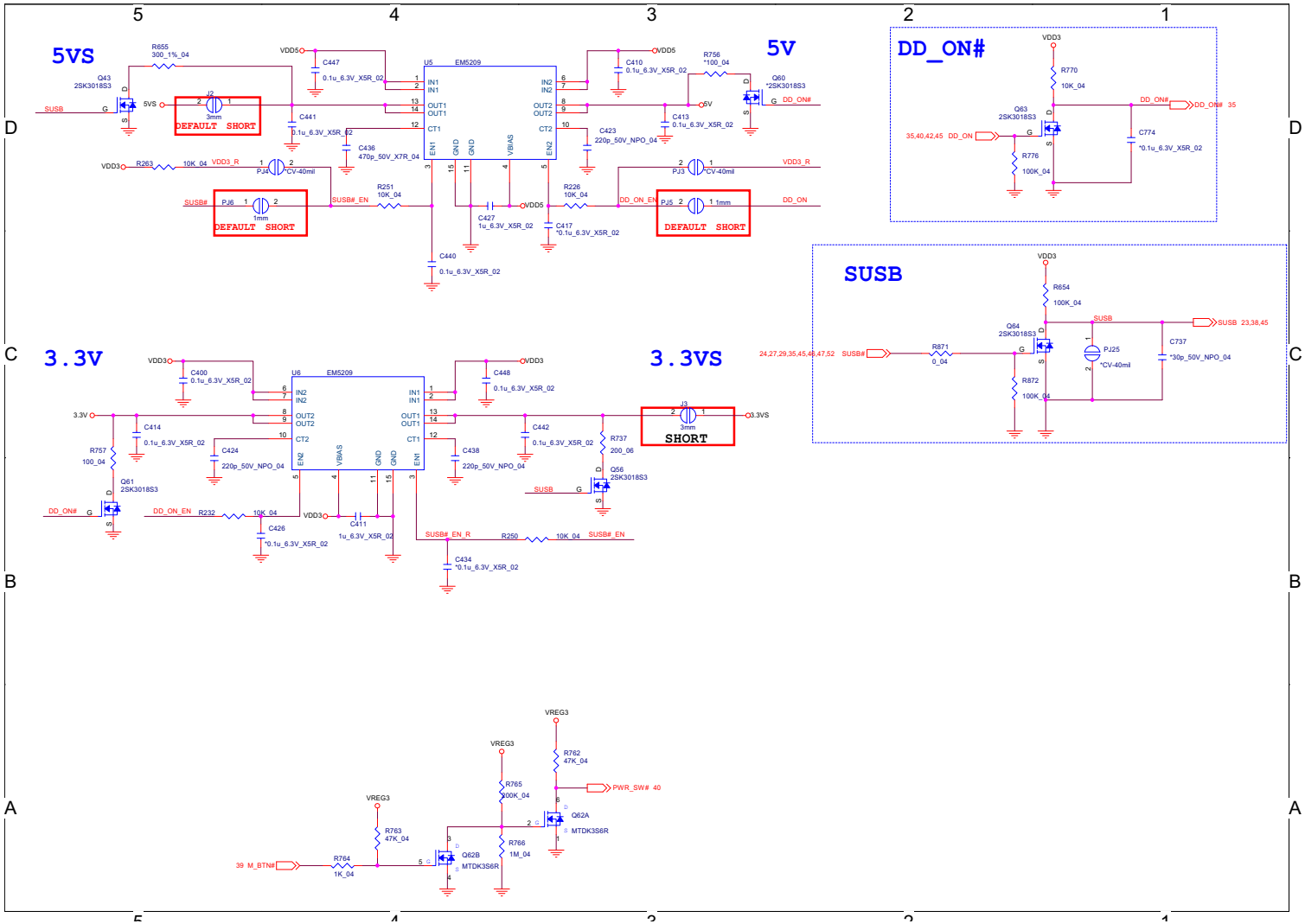

Sheet 44 of 62
3V, 5V, 3VS, 5VS

1.8V, 1.8VS, 1.8VA, C10

Sheet 45 of 62
1.8V, 1.8VS, 1.8VA_C10

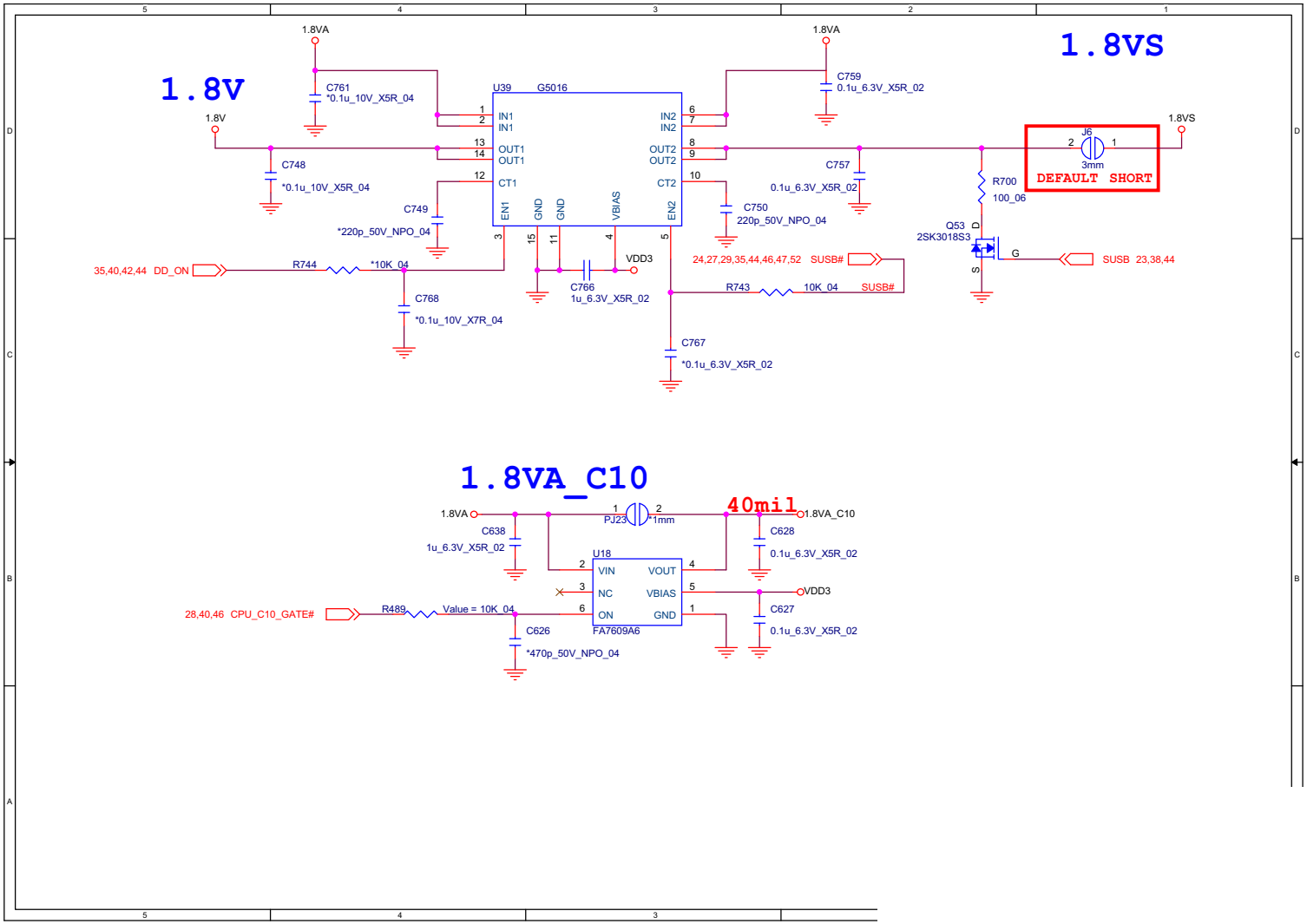

VCCST, VCCSTG

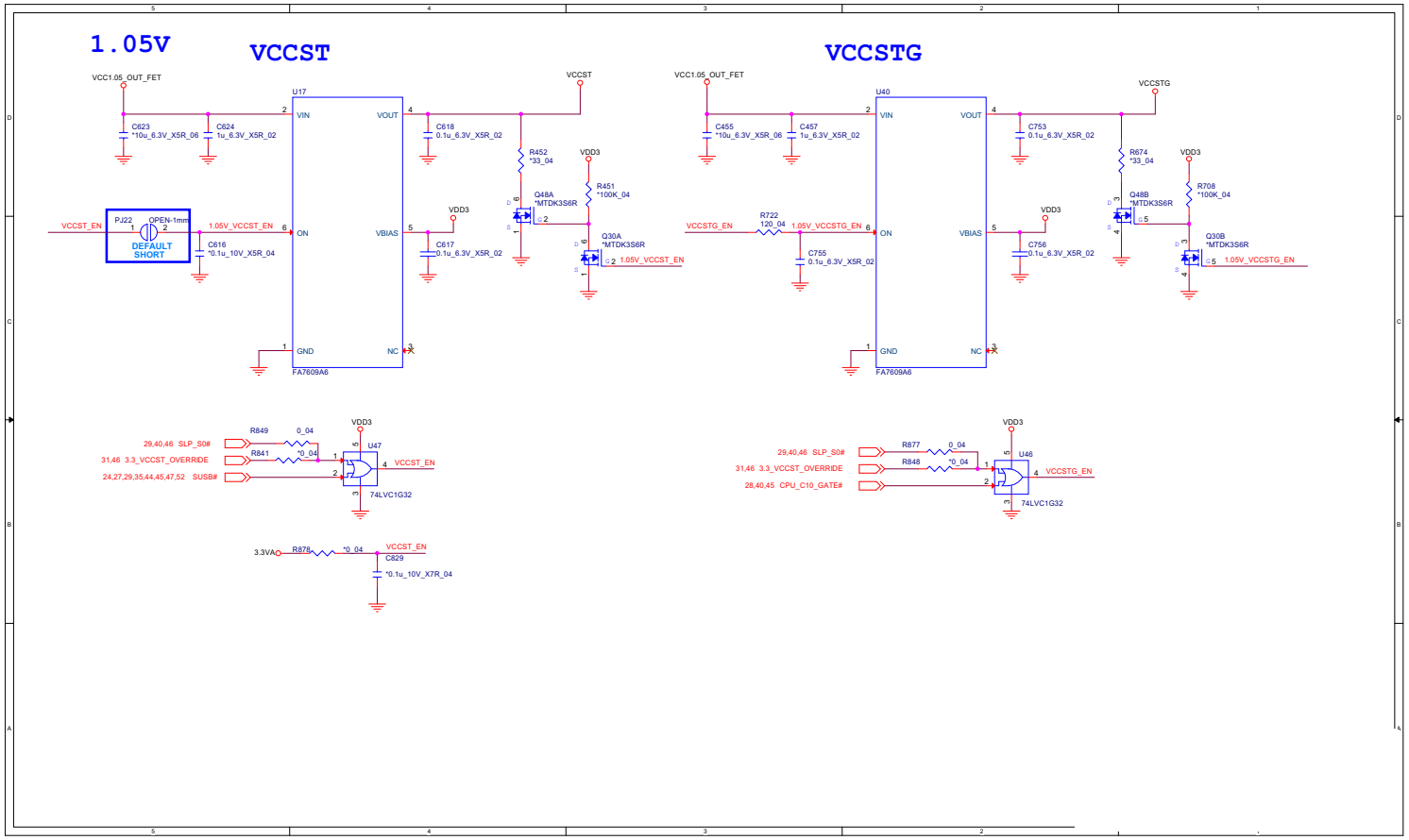

Sheet 46 of 62
VCCST, VCCSTG

VNN / V1.05

Sheet 47 of 62
VNN / V1.05

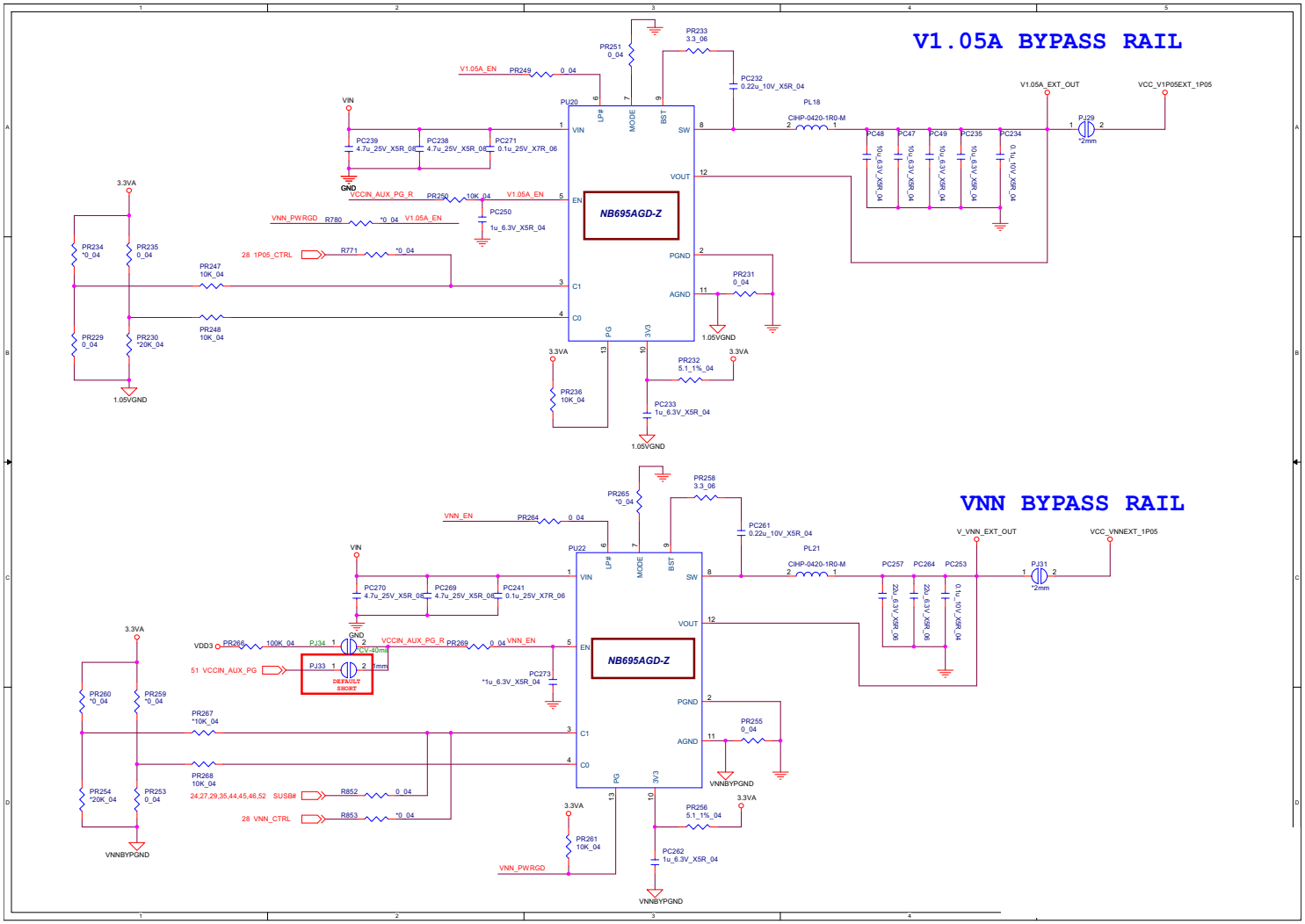

VCCIN

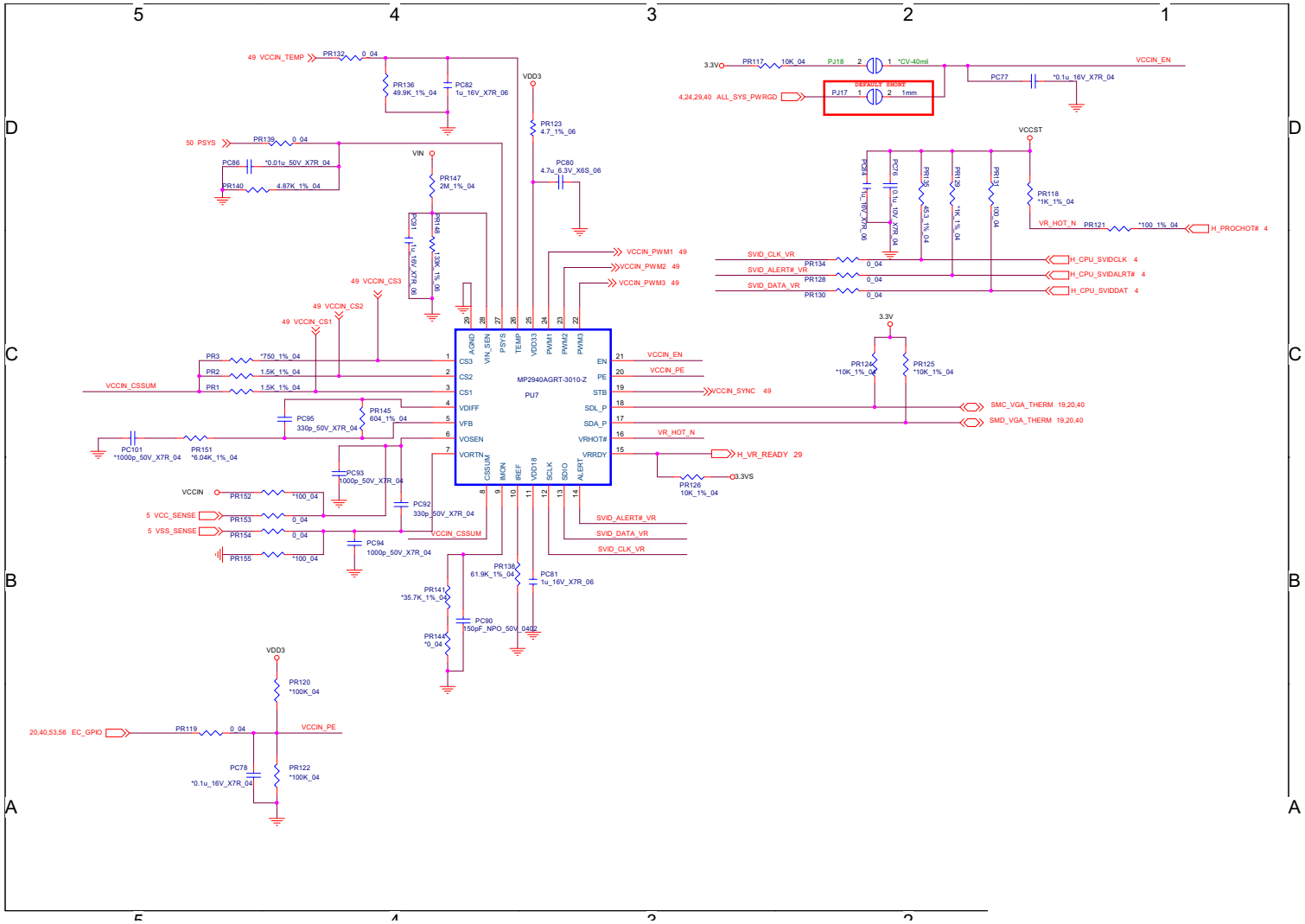

Sheet 48 of 62
VCCIN

VCCIN Output

Sheet 49 of 62
VCCIN Output

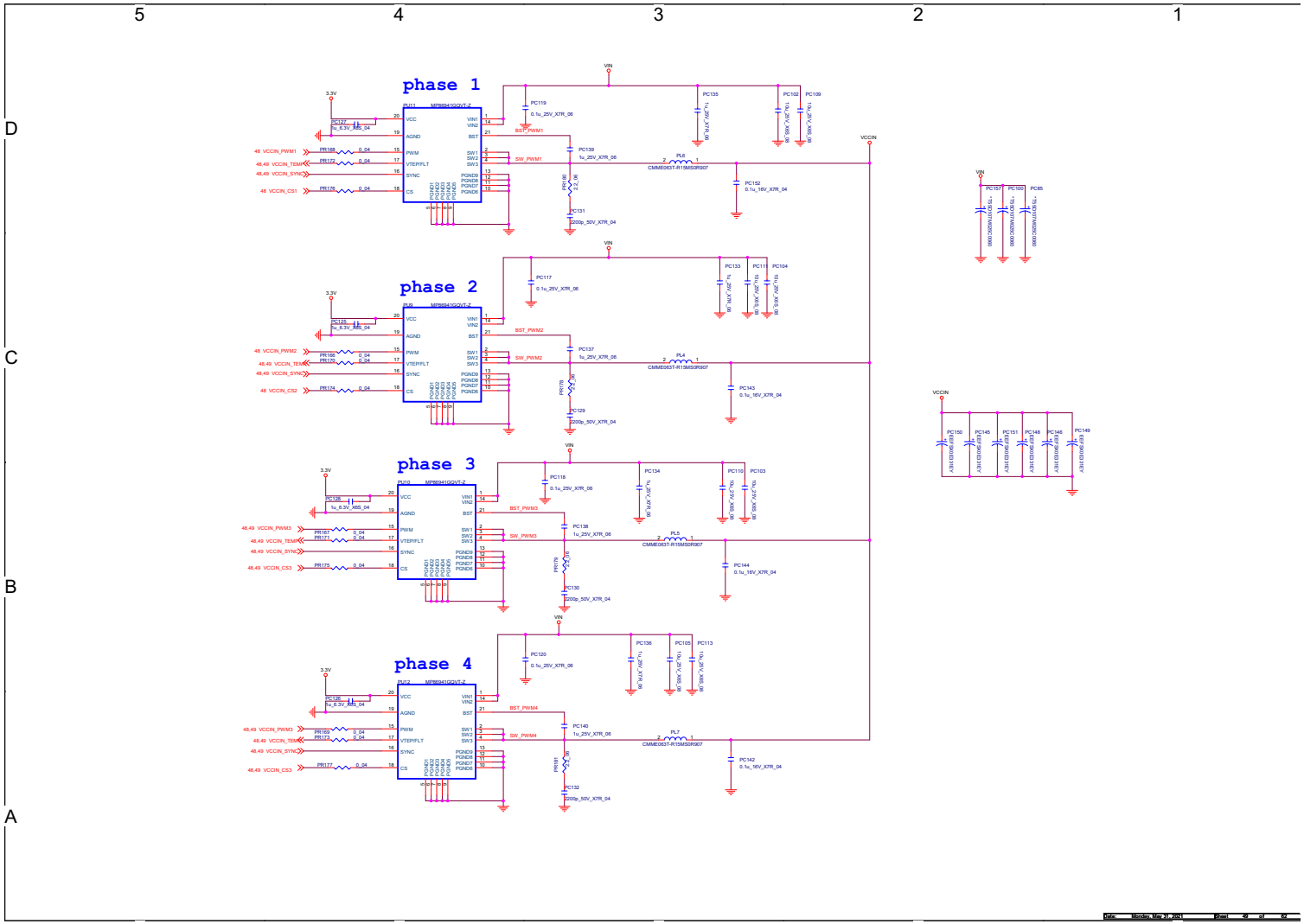

AC_In, Charger

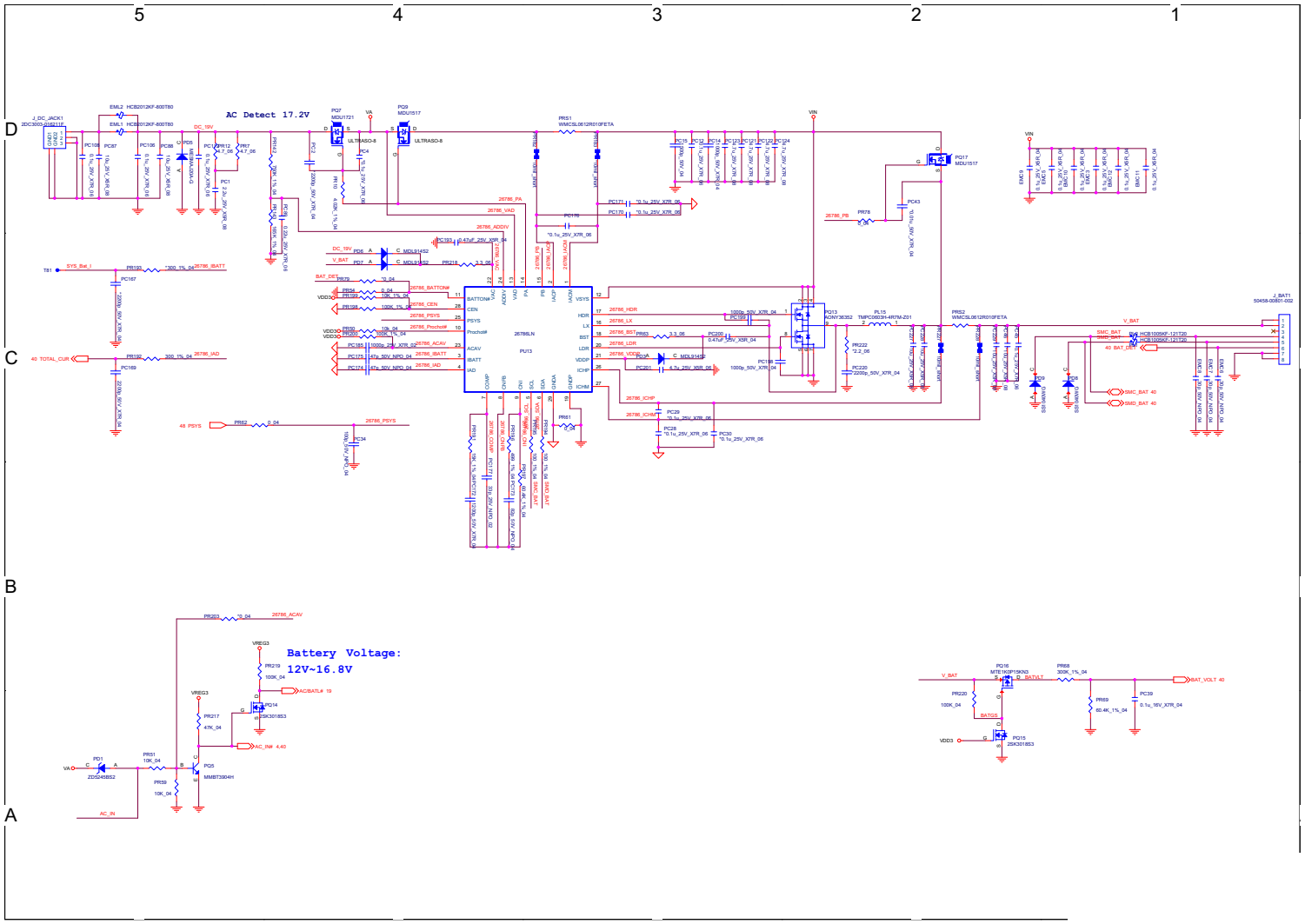

Sheet 50 of 62
AC_In, Charger

VCCIN AUX

Sheet 51 of 62
VCCIN AUX

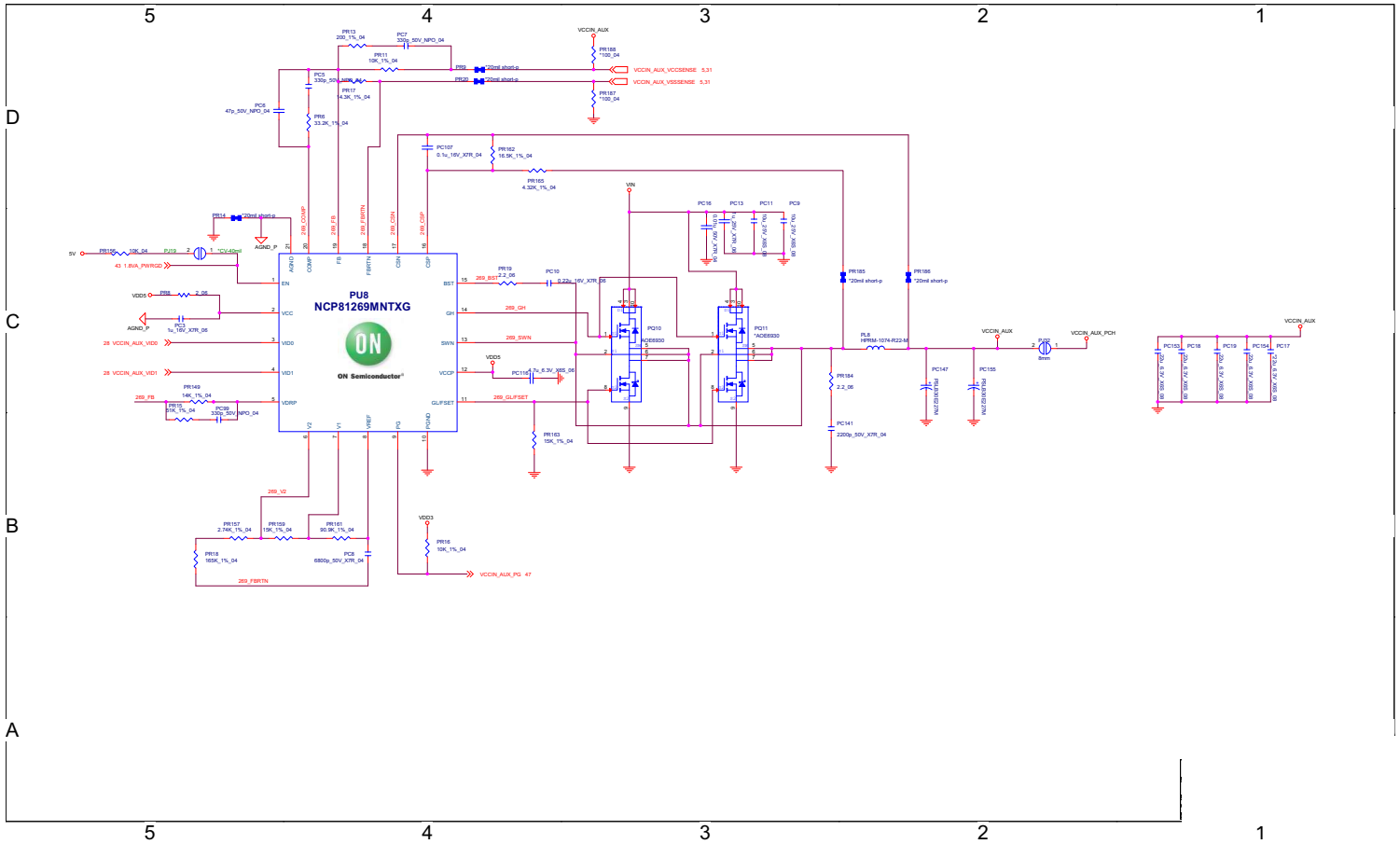

DDR 1.2V / 0.6VS, 2.5V

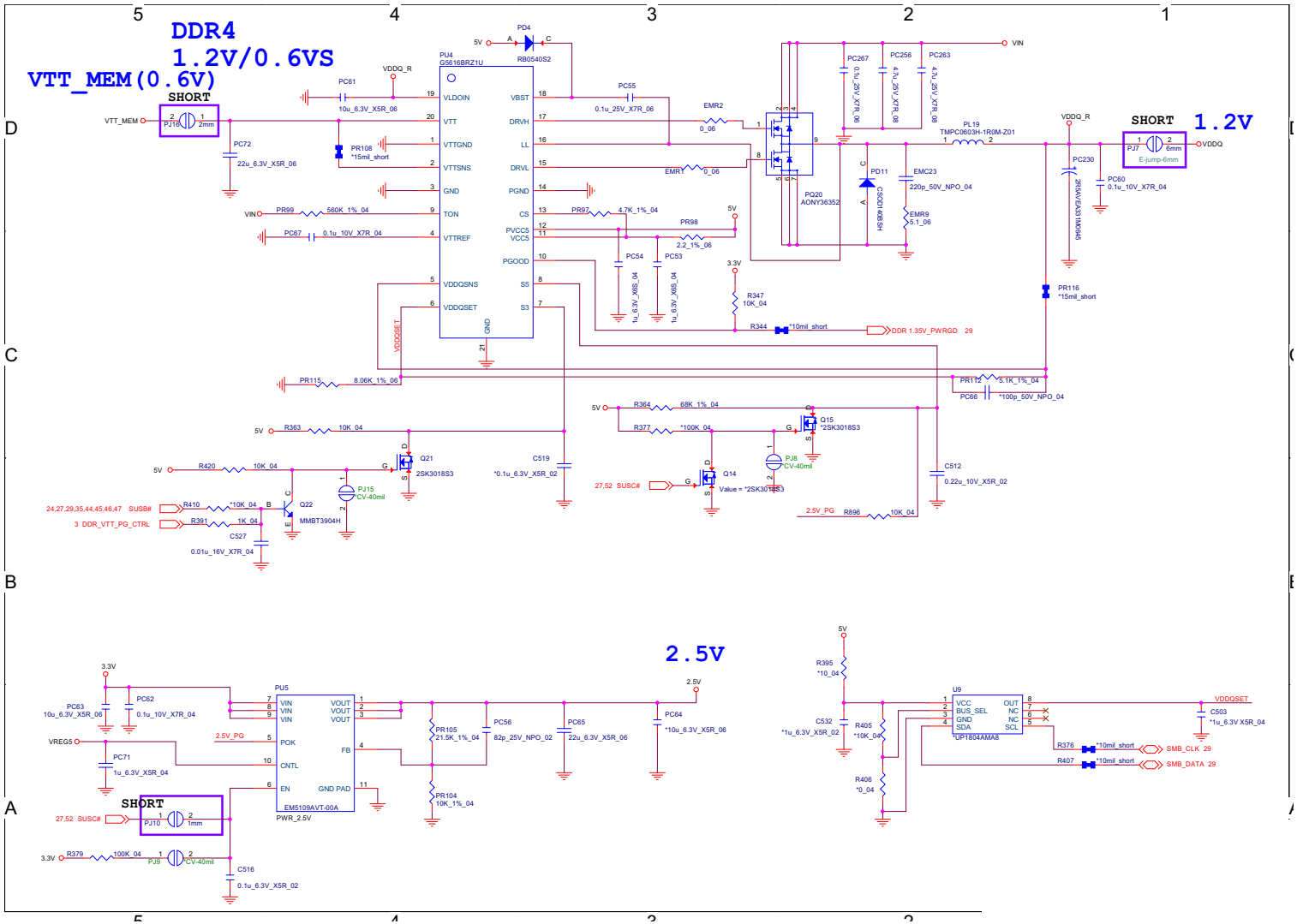

Sheet 52 of 62
DDR 1.2V / 0.6VS, 2.5V

NVVDD1

Sheet 53 of 62
NVVDD1

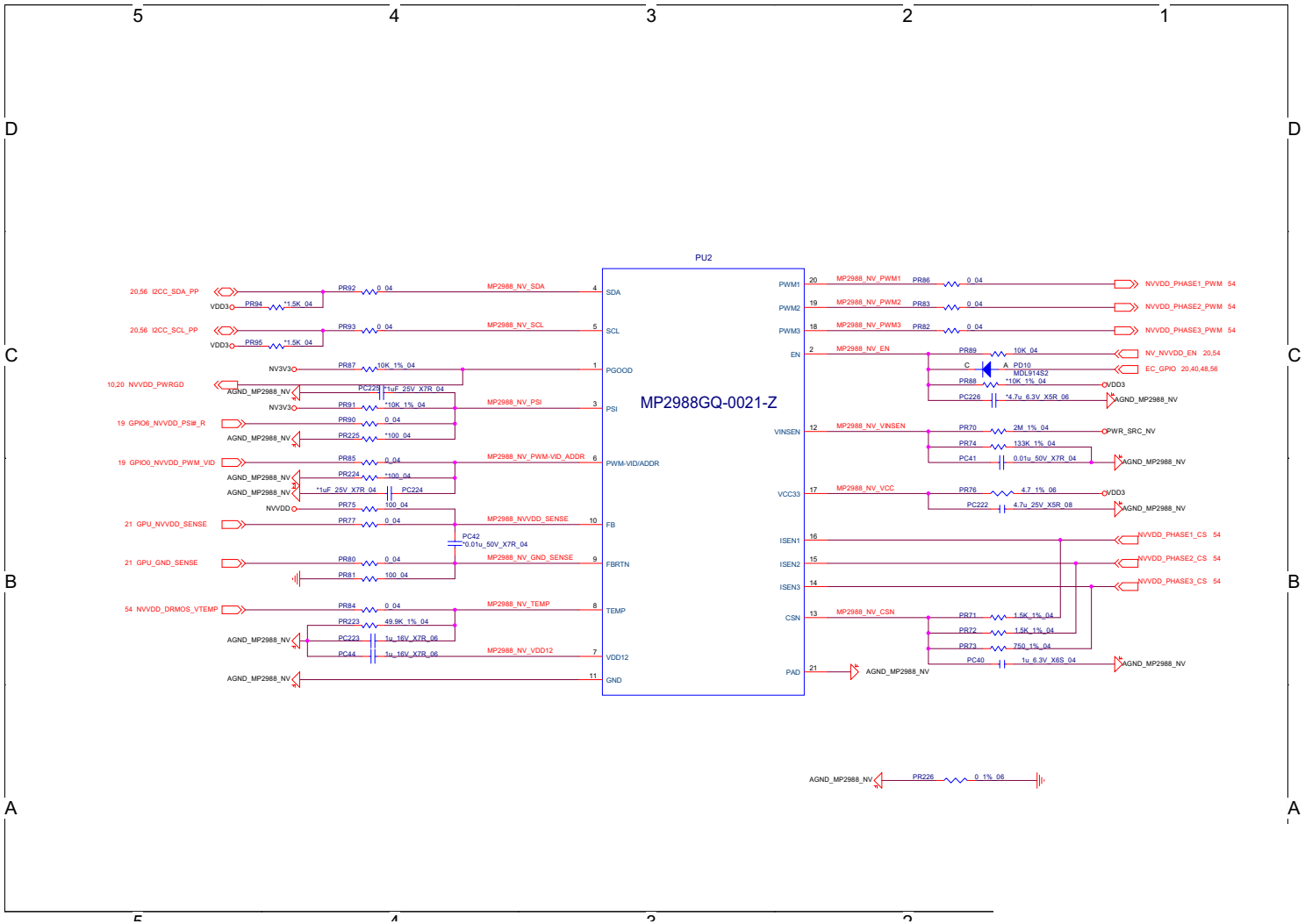

NVVDD2

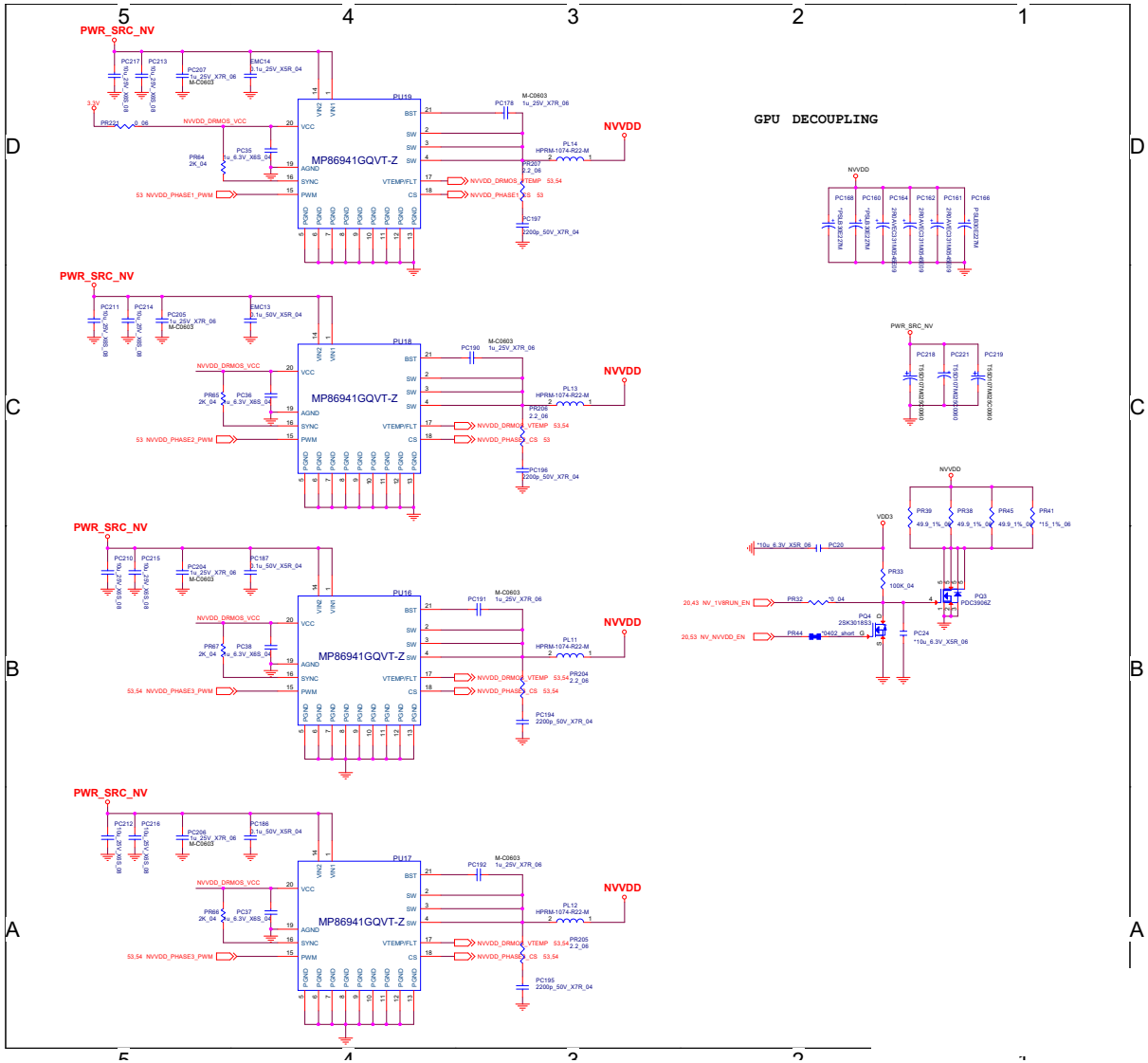

Sheet 54 of 62
NVVDD2

PEX_VDD

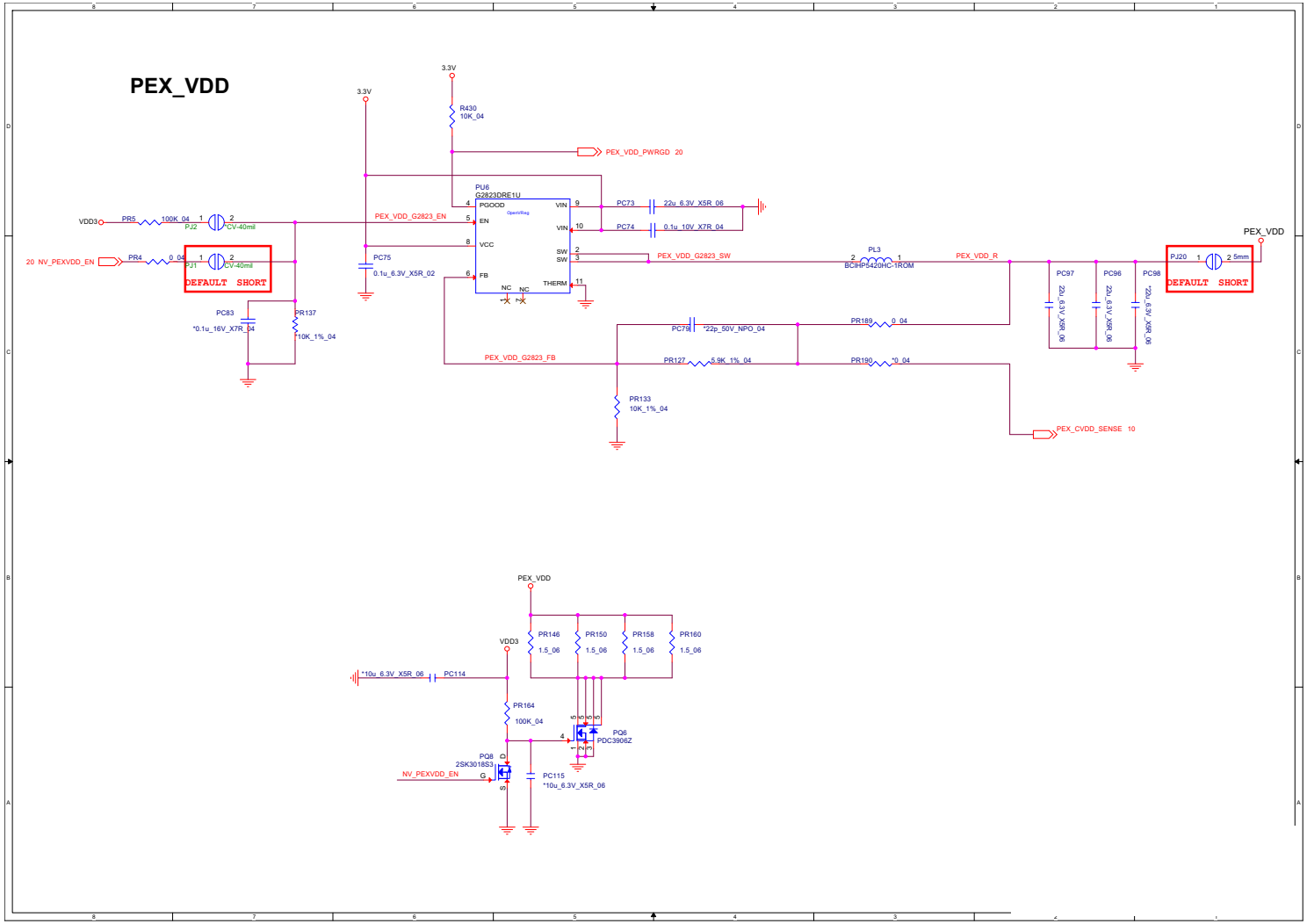

Sheet 55 of 62
PEX_VDD

FBVDDQ

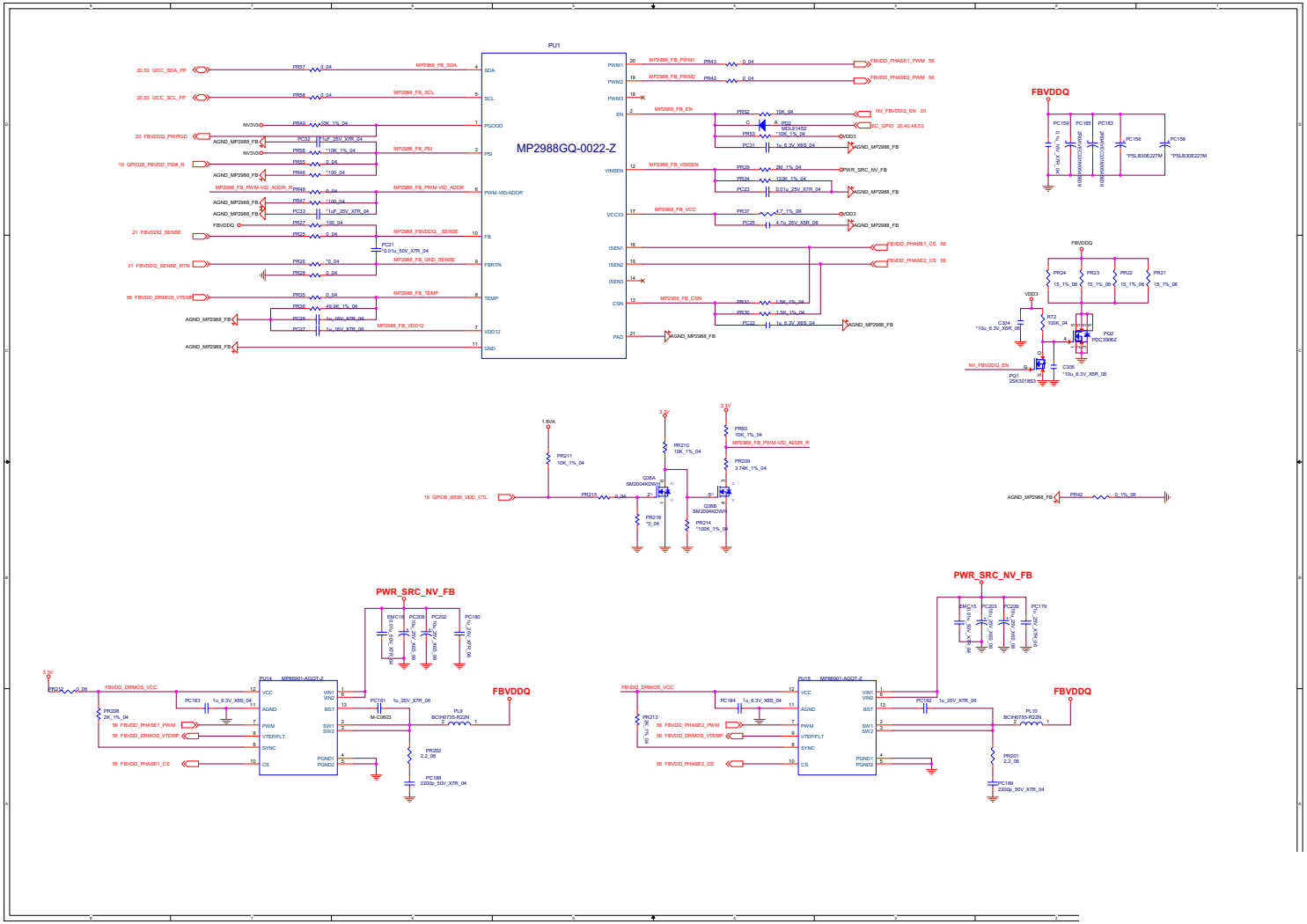

Sheet 56 of 62
FBVDDQ

OVRM

Sheet 57 of 62
OVRM

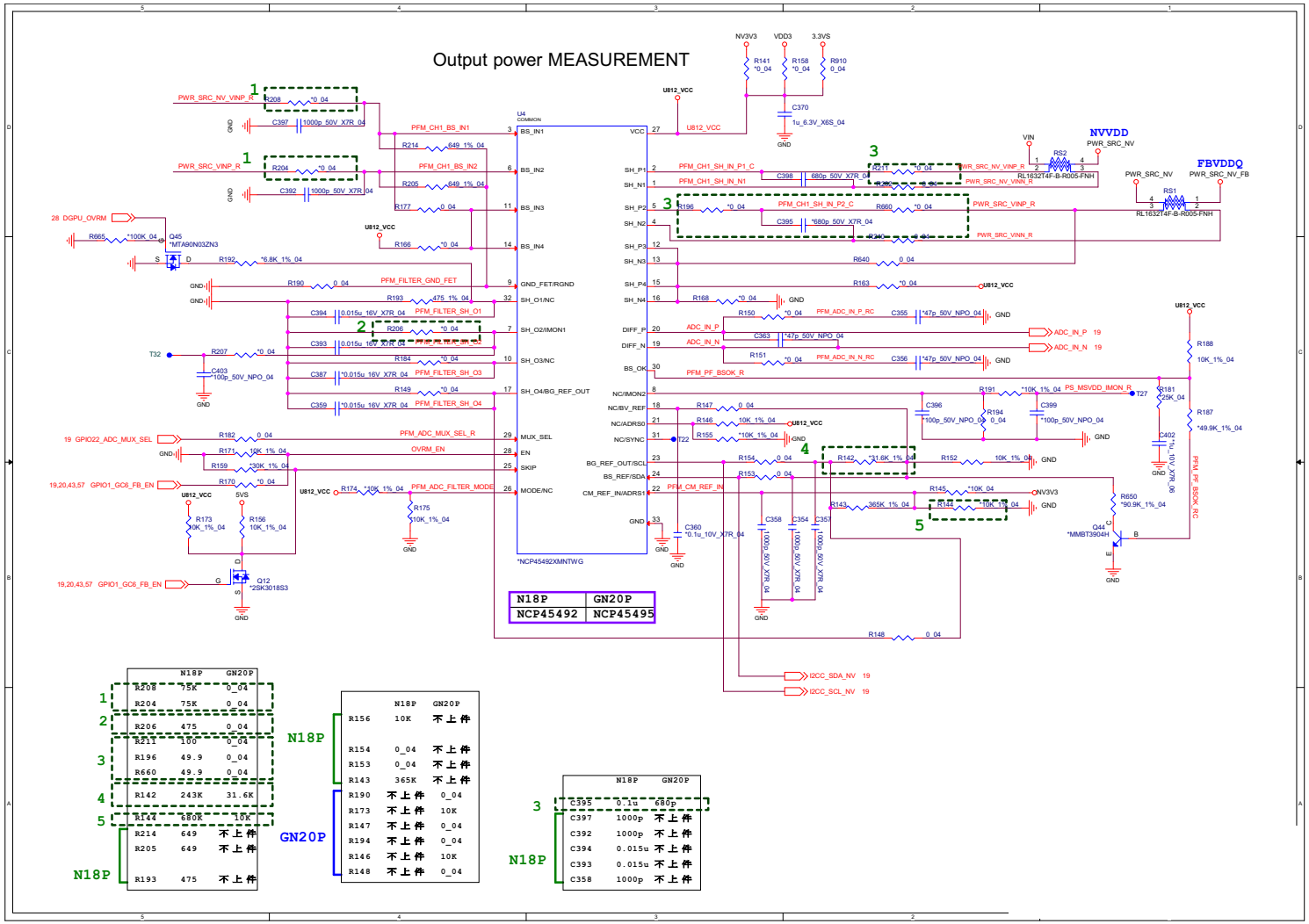

	N18P	GN20P
R208	75K	0_04
R204	75K	0_04
R206	475	0_04
R211	100	0_04
R196	49.9	0_04
R660	49.9	0_04
R142	243K	31.6K
R144	680K	10K
R214	649	不上件
R205	649	不上件
R193	475	不上件

	N18P	GN20P
R156	10K	不上件
R154	0_04	不上件
R153	0_04	不上件
R143	365K	不上件
R190	不上件	0_04
R173	不上件	10K
R147	不上件	0_04
R194	不上件	0_04
R146	不上件	10K
R148	不上件	0_04

	N18P	GN20P
C395	0.1u	680p
C397	1000p	不上件
C392	1000p	不上件
C394	0.015u	不上件
C393	0.015u	不上件
C358	1000p	不上件

Audio Board + Redriver

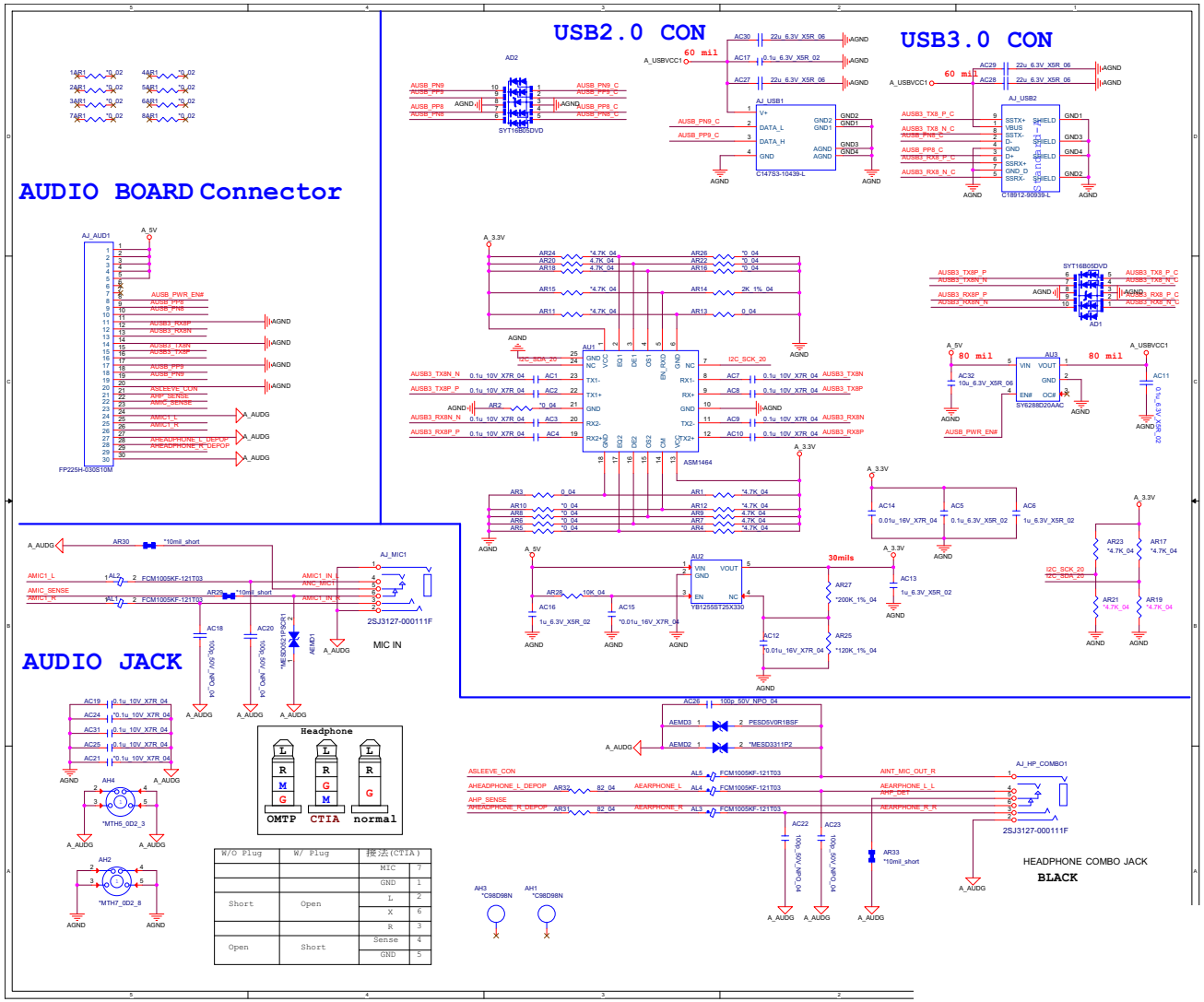

Sheet 58 of 62
Audio Board + Redriver

LED Board

Sheet 59 of 62
LED Board

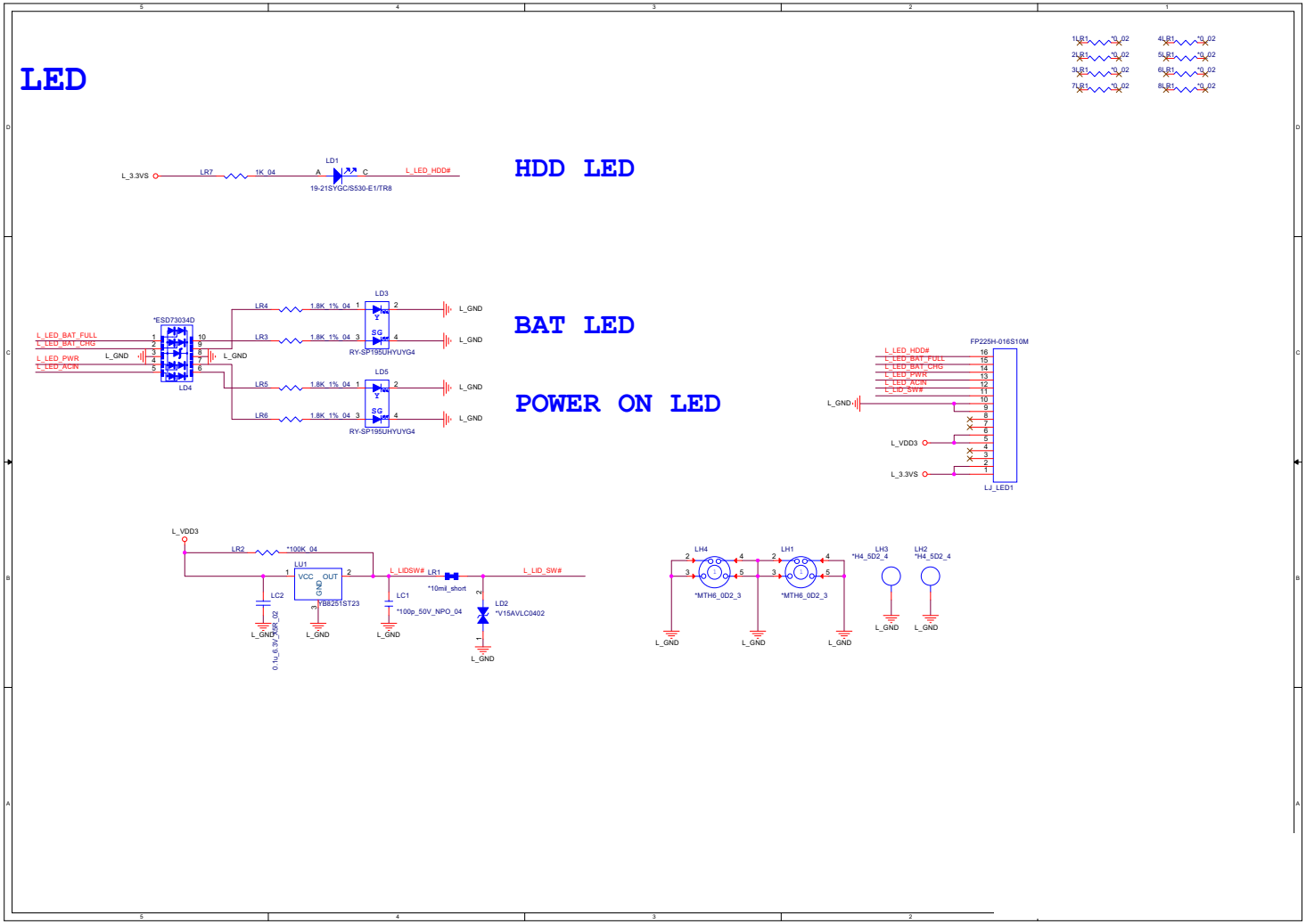

Power SW Board

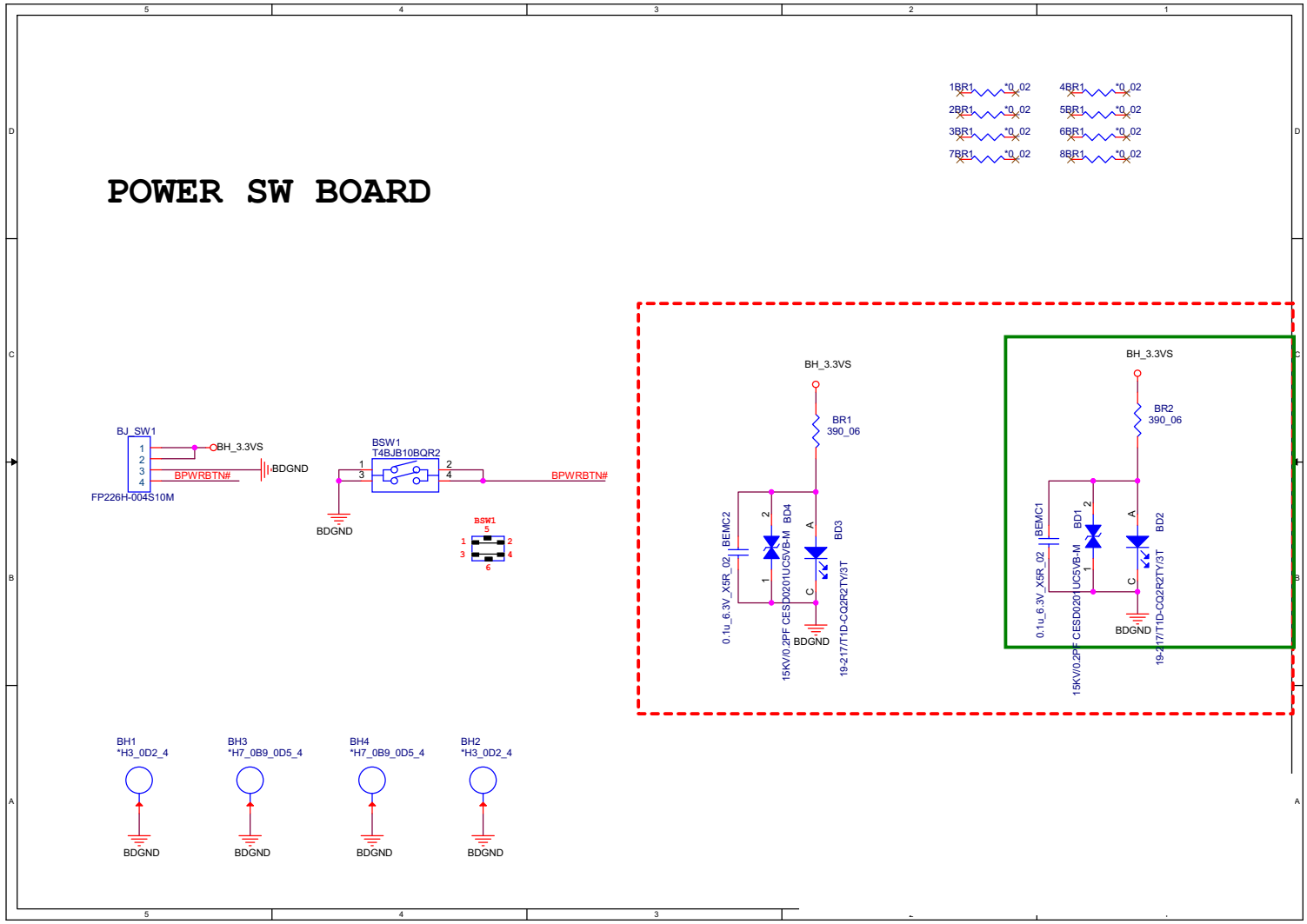

Sheet 60 of 62
Power SW Board

17” LED Board

Sheet 61 of 62
17” LED Board

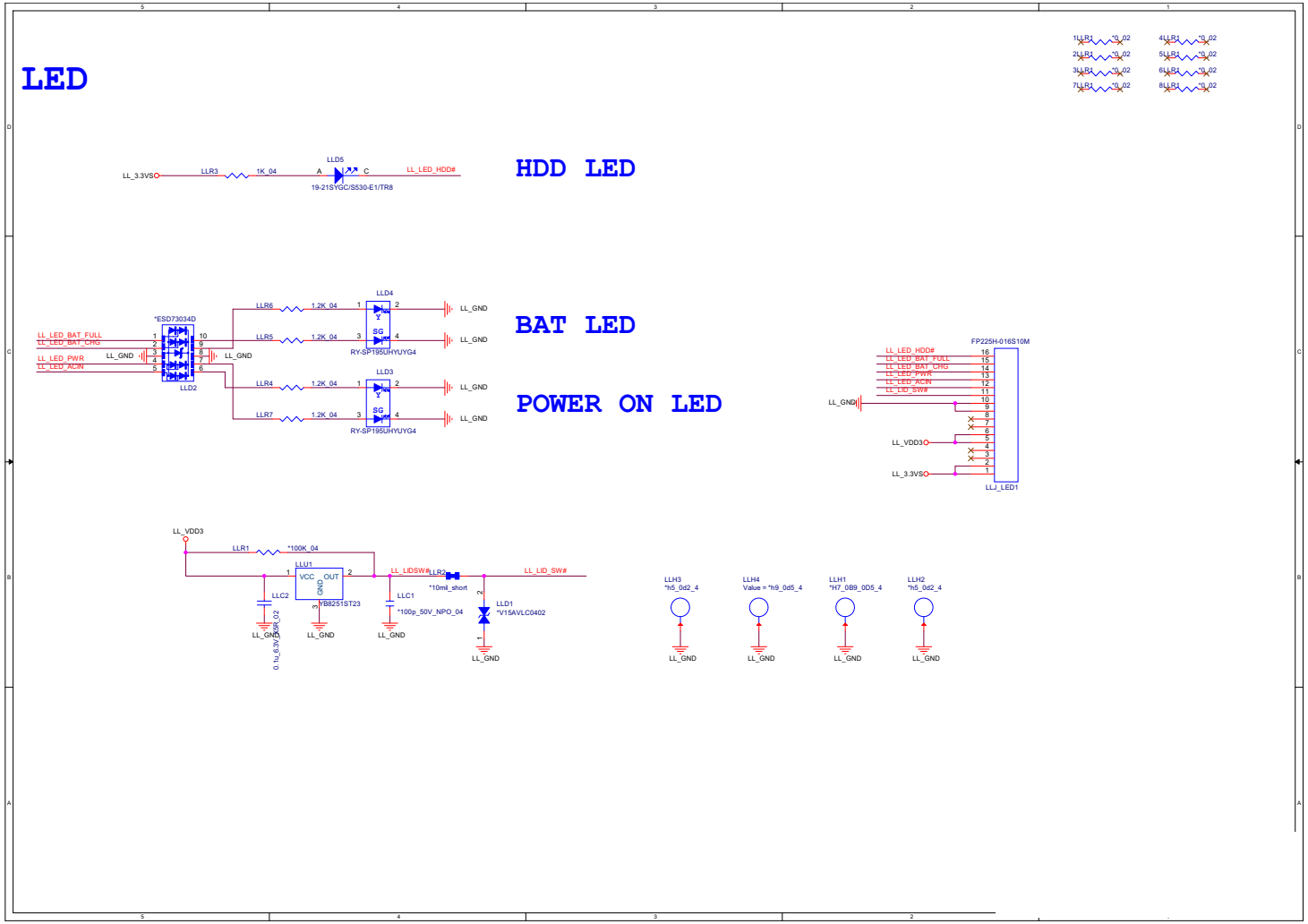

Power Sequence

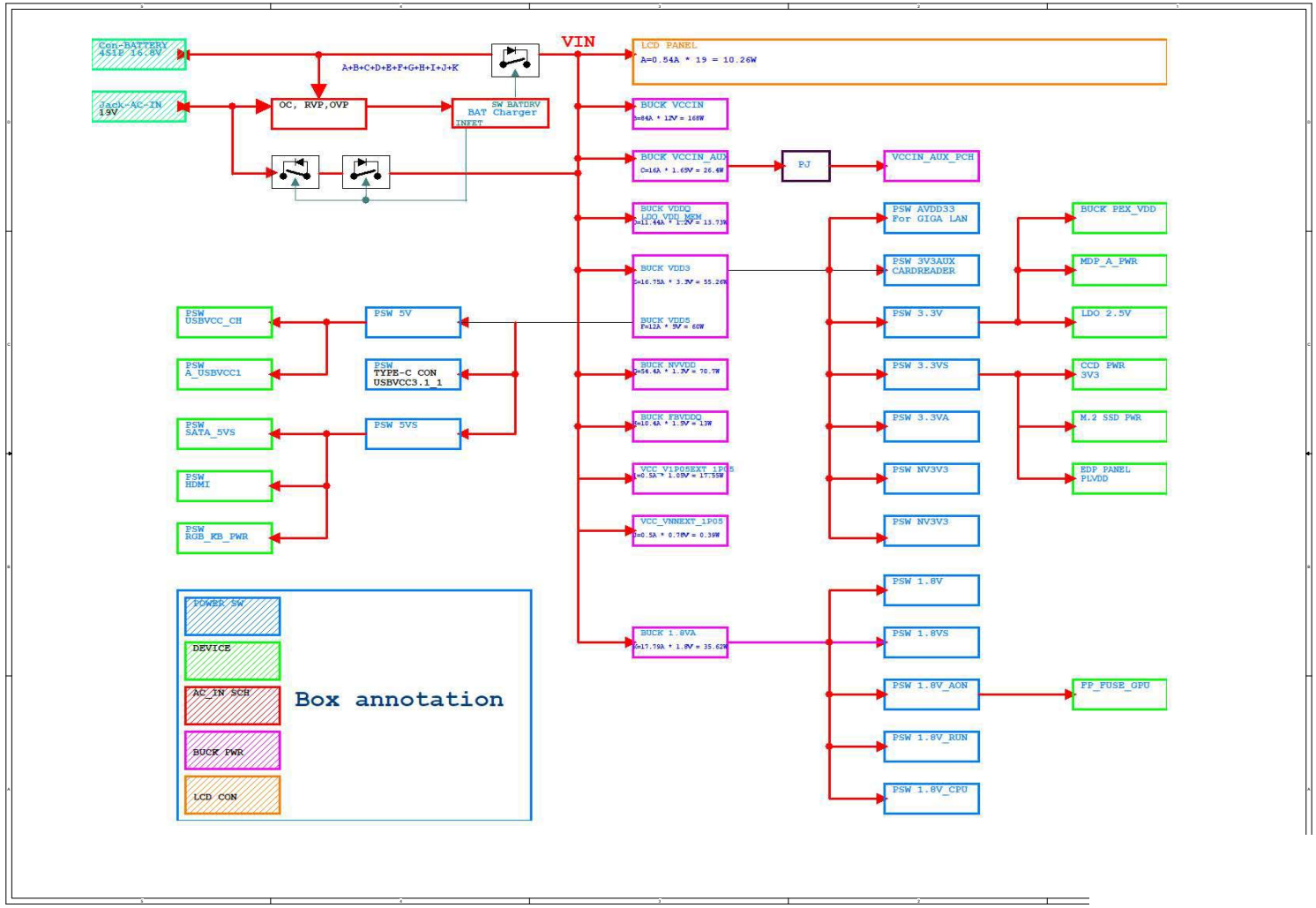

Sheet 62 of 62
Power Sequence