SERVICE MANUAL

NP50HP / NP55HP-HM

notebook

Notebook Computer

NP50HP / NP55HP-HM

Service Manual

Notice

The company reserves the right to revise this publication or to change its contents without notice. Information contained herein is for reference only and does not constitute a commitment on the part of the manufacturer or any subsequent vendor. They assume no responsibility or liability for any errors or inaccuracies that may appear in this publication nor are they in anyway responsible for any loss or damage resulting from the use (or misuse) of this publication.

This publication and any accompanying software may not, in whole or in part, be reproduced, translated, transmitted or reduced to any machine readable form without prior consent from the vendor, manufacturer or creators of this publication, except for copies kept by the user for backup purposes.

Brand and product names mentioned in this publication may or may not be copyrights and/or registered trademarks of their respective companies. They are mentioned for identification purposes only and are not intended as an endorsement of that product or its manufacturer.

Version 1.0
June 2021

Trademarks

Intel and Intel Core are trademarks of Intel Corporation.
Windows® is a registered trademark of Microsoft Corporation.
Other brand and product names are trademarks and /or registered trademarks of their respective companies.

HDMI™
HIGH-DEFINITION MULTIMEDIA INTERFACE

About this Manual

This manual is intended for service personnel who have completed sufficient training to undertake the maintenance and inspection of personal computers.

It is organized to allow you to look up basic information for servicing and/or upgrading components of the ***NP50HP / NP55HP-HM*** series notebook PC.

The following information is included:

Chapter 1, Introduction, provides general information about the location of system elements and their specifications.
Chapter 2, Disassembly, provides step-by-step instructions for disassembling parts and subsystems and how to upgrade elements of the system.

Appendix A, Part Lists
Appendix B, Schematic Diagrams

IMPORTANT SAFETY INSTRUCTIONS

Follow basic safety precautions, including those listed below, to reduce the risk of fire, electric shock and injury to persons when using any electrical equipment:

1. Do not use this product near water, for example near a bath tub, wash bowl, kitchen sink or laundry tub, in a wet basement or near a swimming pool.
2. Avoid using a telephone (other than a cordless type) during an electrical storm. There may be a remote risk of electrical shock from lightning.
3. Do not use the telephone to report a gas leak in the vicinity of the leak.
4. Use only the power cord and batteries indicated in this manual. Do not dispose of batteries in a fire. They may explode. Check with local codes for possible special disposal instructions.
5. This product is intended to be supplied by a Listed Power Unit as follows:

- AC Input of 100 - 240V, 50 - 60Hz, DC Output of 19.5V, 9.23A (**180** Watts) minimum AC/DC Adapter.

FCC Statement

This device complies with Part 15 of the FCC Rules. Operation is subject to the following two conditions:
This device may not cause harmful interference.
This device must accept any interference received, including interference that may cause undesired operation.

Instructions for Care and Operation

The notebook computer is quite rugged, but it can be damaged. To prevent this, follow these suggestions:

1. **Don't drop it, or expose it to shock.** If the computer falls, the case and the components could be damaged.

Do not expose the computer to any shock or vibration. 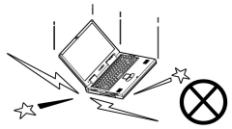	*Do not place it on an unstable surface.* 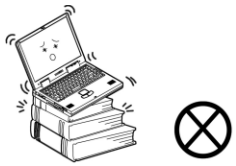	*Do not place anything heavy on the computer.* 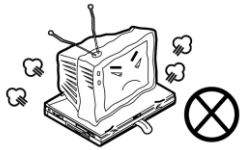

2. **Keep it dry, and don't overheat it.** Keep the computer and power supply away from any kind of heating element. This is an electrical appliance. If water or any other liquid gets into it, the computer could be badly damaged.

Do not expose it to excessive heat or direct sunlight. 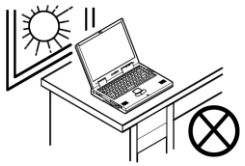	*Do not leave it in a place where foreign matter or moisture may affect the system.*	*Don't use or store the computer in a humid environment.* 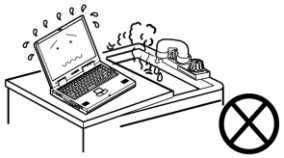	*Do not place the computer on any surface which will block the vents.* 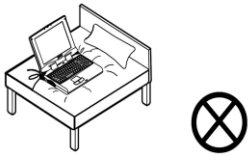

3. **Follow the proper working procedures for the computer**. Shut the computer down properly and don't forget to save your work. Remember to periodically save your data as data may be lost if the battery is depleted.

Do not turn off the power until you properly shut down all programs. 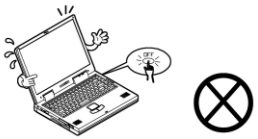	*Do not turn off any peripheral devices when the computer is on.* 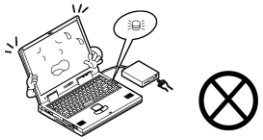	*Do not disassemble the computer by yourself.*	*Perform routine maintenance on your computer.*

4. **Avoid interference.** Keep the computer away from high capacity transformers, electric motors, and other strong magnetic fields. These can hinder proper performance and damage your data.
5. **Take care when using peripheral devices**.

Use only approved brands of peripherals. 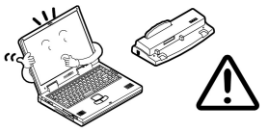	*Unplug the power cord before attaching peripheral devices.* 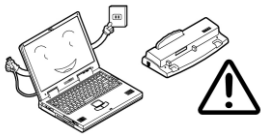

Power Safety

The computer has specific power requirements:

- Only use a power adapter approved for use with this computer.
- Your AC adapter may be designed for international travel but it still requires a steady, uninterrupted power supply. If you are unsure of your local power specifications, consult your service representative or local power company.
- The power adapter may have either a 2-prong or a 3-prong grounded plug. The third prong is an important safety feature; do not defeat its purpose. If you do not have access to a compatible outlet, have a qualified electrician install one.
- When you want to unplug the power cord, be sure to disconnect it by the plug head, not by its wire.
- Make sure the socket and any extension cord(s) you use can support the total current load of all the connected devices.
- Before cleaning the computer, make sure it is disconnected from any external power supplies.

Power Safety Warning

Before you undertake any upgrade procedures, make sure that you have turned off the power, and disconnected all peripherals and cables (including telephone lines and power cord). It is advisable to also remove your battery in order to prevent accidentally turning the machine on.

Do not plug in the power cord if you are wet.	*Do not use the power cord if it is broken.* 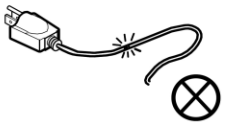	*Do not place heavy objects on the power cord.* 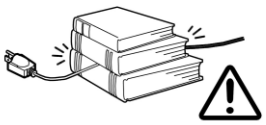

Battery Precautions

- Only use batteries designed for this computer. The wrong battery type may explode, leak or damage the computer.
- Do not continue to use a battery that has been dropped, or that appears damaged (e.g. bent or twisted) in any way. Even if the computer continues to work with a damaged battery in place, it may cause circuit damage, which may possibly result in fire.
- Recharge the batteries using the notebook's system. Incorrect recharging may make the battery explode.
- Do not try to repair a battery pack. Refer any battery pack repair or replacement to your service representative or qualified service personnel.
- Keep children away from, and promptly dispose of a damaged battery. Always dispose of batteries carefully. Batteries may explode or leak if exposed to fire, or improperly handled or discarded.
- Keep the battery away from metal appliances.
- Affix tape to the battery contacts before disposing of the battery.
- Do not touch the battery contacts with your hands or metal objects.

Battery Guidelines

The following can also apply to any backup batteries you may have.

- If you do not use the battery for an extended period, then remove the battery from the computer for storage.
- Before removing the battery for storage charge it to 60% - 70%.
- Check stored batteries at least every 3 months and charge them to 60% - 70%.

Battery Disposal

The product that you have purchased contains a rechargeable battery. The battery is recyclable. At the end of its useful life, under various state and local laws, it may be illegal to dispose of this battery into the municipal waste stream. Check with your local solid waste officials for details in your area for recycling options or proper disposal.

Caution

Danger of explosion if battery is incorrectly replaced. Replace only with the same or equivalent type recommended by the manufacturer. Discard used battery according to the manufacturer's instructions.

Battery Level

Click the battery icon in the taskbar to see the current battery level and charge status. A battery that drops below a level of 10% will not allow the computer to boot up. Make sure that any battery that drops below 10% is recharged within one week.

Related Documents

You may also need to consult the following manual for additional information:

User's Manual on CD/DVD

This describes the notebook PC's features and the procedures for operating the computer and its ROM-based setup program. It also describes the installation and operation of the utility programs provided with the notebook PC.

System Startup

1. Remove all packing materials.
2. Place the computer on a stable surface.
3. Securely attach any peripherals you want to use with the computer (e.g. keyboard and mouse) to their ports.
4. **When first setting up the computer use the following procedure** (as to safeguard the computer during shipping, the battery will be locked to not power the system until first connected to the AC/DC adapter and initially set up as below):
   - Attach the AC/DC adapter cord to the DC-In jack on the rear of the computer, then plug the AC power cord into an outlet, and connect the AC power cord to the AC/DC adapter. The battery will now be unlocked.
5. Use one hand to raise the lid/LCD to a comfortable viewing angle (do not exceed 130 degrees); use the other hand (as illustrated in Figure 1) to support the base of the computer (**Note**: **Never** lift the computer by the lid/LCD).
6. Press the power button to turn the computer "on".

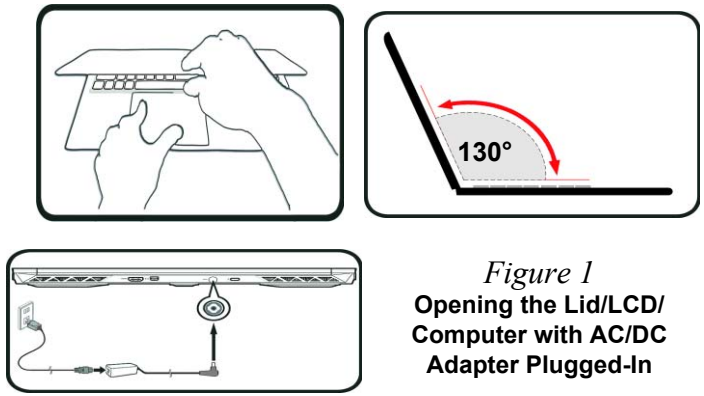

Figure 1
Opening the Lid/LCD/ Computer with AC/DC Adapter Plugged-In

Shut Down

Note that you should always shut your computer down by choosing the **Shut down** command in ***Windows*** (see below). This will help prevent hard disk or system problems.

1. Click the Start Menu icon .
2. Click the **Power** item .
3. Choose **Shut Down** from the menu.

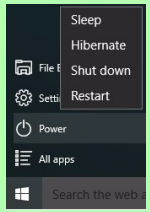

Contents

Introduction 1-1

Overview 1-1
Specifications 1-2
External Locator - Top View with LCD Panel Open 1-4
External Locator - Front & Right Side Views 1-5
External Locator - Left Side & Rear View 1-6
External Locator - Bottom View 1-7
Mainboard Overview - Top (Key Parts) 1-8
Mainboard Overview - Bottom (Key Parts) 1-9
Mainboard Overview - Top (Connectors) 1-10
Mainboard Overview - Bottom (Connectors) 1-11

Disassembly 2-1

Overview 2-1
Maintenance Tools 2-2
Connections 2-2
Maintenance Precautions 2-3
Disassembly Steps 2-4
Removing the Battery 2-5
Removing the Keyboard 2-7
Removing the M.2 SSD Module 2-8
Removing the System Memory (RAM) 2-10
Removing the Wireless LAN Module 2-11
Wireless LAN, Combo Module Cables 2-12

Part Lists A-1

Part List Illustration Location A-2
Top (NP50HP) A-3
Top (NP55HP-HM) A-4
Bottom A-5
Main Board A-6
LCD (NP50HP) A-7
LCD (NP55HP-HM) A-8

Schematic Diagrams.....B-1

System Block Diagram B-2
Processor 1/6 .....B-3
Processor 2/6 .....B-4
Processor 3/6 .....B-5
Processor 4/6 .....B-6
Processor 5/6 .....B-7
Processor 6/6 .....B-8
DDR4 CHA SO-DIMM_0 .....B-9
DDR4 CHB SO-DIMM_0 .....B-10
VGA PCI-E Interface B-11
Frame Buffer Partition A/B B-12
Frame Buffer A B-13
Frame Buffer A B-14
Frame Buffer B B-15
Frame Buffer B B-16
Frame Buffer Partition B-17
Frame Buffer C B-18
Frame Buffer C B-19
GPU GND B-20
GPU NVVDD, FBVDDQ B-21
GPU Decoupling - NVVDD B-22
GPU Decoupling - FBVDDQ B-23
Misc - GPIO, I2C, ROM B-24
IFP I/O Interface B-25
Straps and XTAL B-26
NVIDIA Power Sequence B-27
OVR-M B-28

mDP B-29
Panel, Inverter B-30
HDMI B-31
PCH 1/8 ..... B-32
PCH 2/8 ..... B-33
PCH 3/8 ..... B-34
PCH 4/8 ..... B-35
PCH 5/8 ..... B-36
PCH 6/8 ..... B-37
PCH 7/8 ..... B-38
PCH 8/8 ..... B-39
Retimer 1/2 ..... B-40
Retimer 2/2 ..... B-41
PD65993, Type-C B-42
Audio Codec B-43
M.2 WLAN+BT, PCIE 4X SSD B-44
M.2 PCIE 4X SSD B-45
Type-C & A B-46
LAN RTL8111H B-47
Card Reader B-48
HDD, Click TP, Audio B-49
LED, CCD, TPM, Power SW Bd. B-50
KBC-ITE IT5570 ..... B-51
RGB KB B-52
5V, 5VS, 3.3V, 3.3VS B-53
VCCST, VCCSTG, VCCSFR B-54
VDD3, VDD5 ..... B-55
DDR 1.2V / 0.6VS, 2.5V B-56
VCCIN B-57
VCCIN Output B-58
VNN / V1.05A B-59
VCCIN AUX B-60
Charger B-61
NVVDD1 ..... B-62
NVVDD2 ..... B-63
PEX_VDD B-64
FBVDDQ B-65
1V8_AON, NV3V3, 3.3VA B-66
Audio Board + Redriver B-67
LED Board B-68
Power SW Board B-69
Power Sequence B-70

Chapter 1: Introduction

Overview

This manual covers the information you need to service or upgrade the ***NP50HP / NP55HP-HM*** series notebook computer. Information about operating the computer (e.g. getting started, and the *Setup* utility) is in the *User's Manual*. Information about dri-vers (e.g. VGA & audio) is also found in the *User's Manual*. The manual is shipped with the computer.

Operating systems (e.g. *Windows 10,* etc.) have their own manuals as do application softwares (e.g. word processing and database programs). If you have questions about those programs, you should consult those manuals.

The ***NP50HP / NP55HP-HM*** series notebook is designed to be upgradeable. See ***Disassembly on page 2 - 1*** for a detailed description of the upgrade procedures for each specific component. Please take note of the warning and safety information indicated by the "🔔" symbol.

The balance of this chapter reviews the computer's technical specifications and features.

Specifications

Latest Specification Information

The specifications listed here are correct at the time of sending them to the press. Certain items (particularly processor types/speeds) may be changed, delayed or updated due to the manufacturer's release schedule. Check with your service center for more details.

CPU Speed & Computer in DC Mode

Note that when the computer is in DC mode (powered by the battery only) the CPU may not run at full speed. This is a design feature implemented in order to protect the battery.

Processor Options

i7-11800H (2.30GHz), TDP 45W
i7-11600H (2.90GHz), TDP 45W
i5-11400H (2.70GHz), TDP 45W
i5-11260H (2.60GHz), TDP 45W

Core Logic

Mobile Intel® HM570 Express Chipset

LCD Options

LCD, 15.6" (39.62cm), 16:9, FHD (1920x1080)

BIOS

INSYDE BIOS (256Mb SPI Flash ROM)

Memory

Dual Channel DDR4
Two 260 Pin SO-DIMM Sockets
Supporting up to **3200MHz DDR4** Memory
Memory Expandable up to **64GB**
Compatible with 8GB,16GB or 32GB Modules

(The real memory operating frequency depends on the FSB of the processor.)

Storage

Two M.2 SSDs:
One M.2 PCIe **Gen4 x4** Solid State Drive (SSD)*
One M.2 **SATA/PCIe Gen3 x4** Solid State Drive (SSD)*
*Supporting RAID Level 0/1 with two PCIe SSDs (**PCIe Gen3 x4**)

Security

Security (Kensington® Type) Lock Slot
BIOS Password
Intel® PTT for Systems Without TPM Hardware
(**Factory Option**) TPM 2.0

Video Adapter Options

Microsoft Hybrid Graphics Mode
Supports up to 4 Active Displays

Intel Integrated GPU

Intel® UHD Graphics
Dynamic Frequency
Intel Dynamic Video Memory Technology
Microsoft DirectX®12 Compatible

NVIDIA® Discrete GPU

NVIDIA® GeForce RTX3060
6GB GDDR5 Video RAM
Microsoft DirectX®12 Compatible
Supports PCIe x4

Pointing Device

Built-In Touchpad (with Microsoft PTP Multi Gesture & Scrolling Functionality)

Keyboard

Full-size **Multi-Color** LED Keyboard (with Numeric Keypad)

Audio

High Definition Audio Compliant Interface
Sound Blaster Cinema 6
Built-In Array Microphone
Two Speakers

Communication

Built-In 10/100/1000Mb Base-TX Ethernet LAN

1.0M HD Webcam

WLAN/ Bluetooth M.2 Modules:

(**Factory Option**) Intel® Dual Band Wi-Fi 6 AX200, 2x2 AX Wireless LAN + Bluetooth

(**Factory Option**) Intel® Dual Band Wi-Fi 6 AX201, 2x2 AX Wireless LAN + Bluetooth

(**Factory Option**) Intel® Dual Band Wi-Fi 5 Wireless-AC 9462, 1x1 AC Wireless LAN + Bluetooth

Card Reader

MicroSD Card Reader

M.2 Slots

Slot 1 for **Combo WLAN and Bluetooth** Module

Slot 2 for **SATA** or **PCIe Gen3 x4 SSD**

Slot 3 for **PCIe Gen4 x4 SSD**

Interface

One USB 2.0 Port

One USB 3.2 Gen 1 Type-A Port

One USB 3.2 Gen 2 Type-C Port*

**The maximum amount of current supplied by USB Type-C ports is 500mA (USB 2.0)/900mA (USB3.2).*

One Thunderbolt 4**

***The power output of the Thunderbolt 4 port is 5V/3A in AC mode or 5V/1.5A in DC mode.*

One Mini DisplayPort 1.4

One HDMI-Out Port

One Microphone-In Jack

One 2- In-1 Audio Jack (Headphone / Microphone)

One RJ-45 LAN Jack

One DC-In Jack

Environmental Spec

Temperature

Operating: 5°C - 35°C

Non-Operating: -20°C - 60°C

Relative Humidity

Operating: 20% - 80%

Non-Operating: 10% - 90%

Power

Embedded 4 Cell Polymer Battery Pack, 49WH

Full Range AC/DC Adapter

AC Input: 100 - 240V, 50 - 60Hz

DC Output: 19.5V, 9.23A (**180W**)

Dimensions & Weight

359.5mm (w) * 238mm (d) * 23.9mm (h)

1.99kg (Barebone with 49WH Battery)

External Locator - Top View with LCD Panel Open

Figure 1
Top View

1. Webcam
2. *Camera LED
   When the PC camera is in use, the LED will be illuminated.
3. Built-In Array Microphone
4. Display
5. Power Button
6. Vent
7. Keyboard
8. Touchpad & Buttons

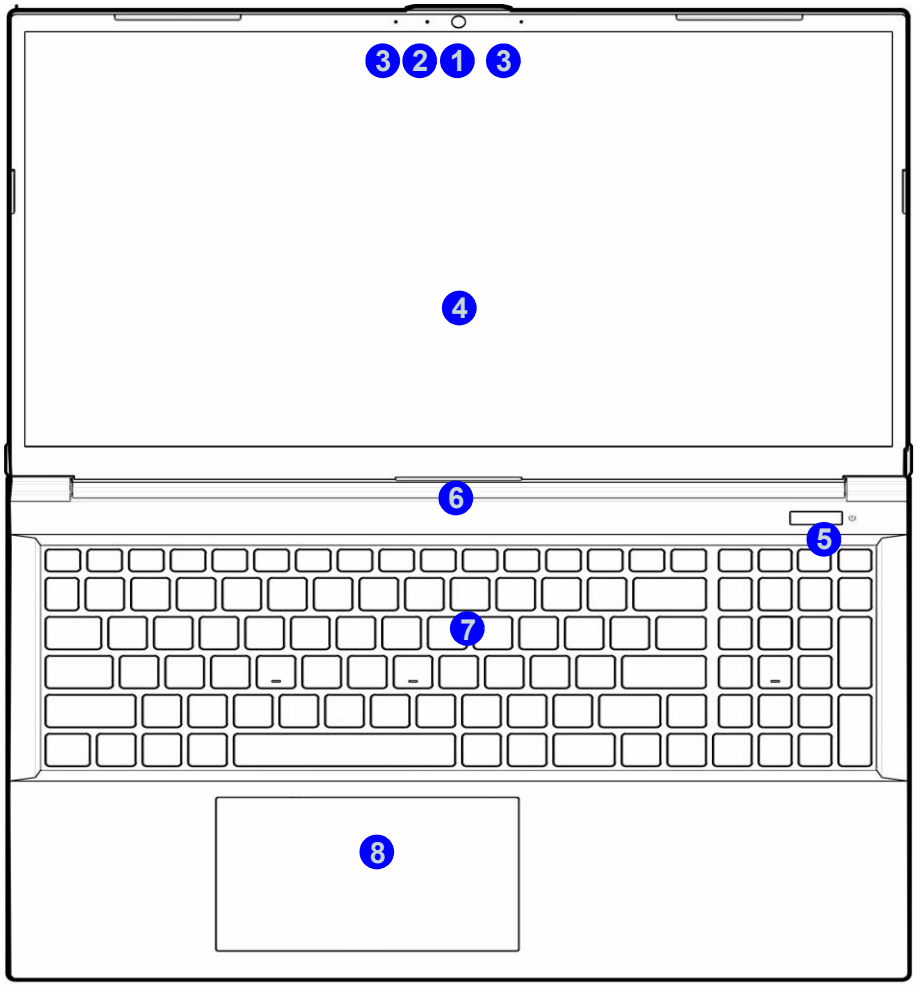

External Locator - Front & Right Side Views

FRONT VIEW

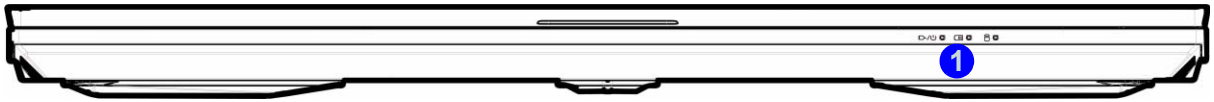

Figure 2
Front View

1. LED Indicators

RIGHT SIDE VIEW

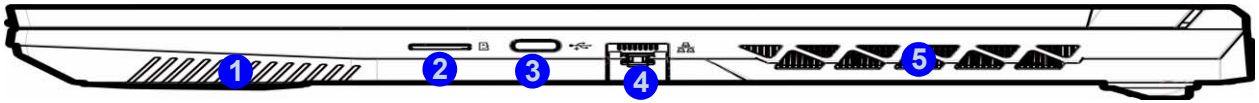

Figure 3
Right Side View

1. Speaker
2. MicroSD Card Reader
3. USB 3.2 Gen 2 Type-C Port
4. RJ-45 LAN Jack
5. Vent

External Locator - Left Side & Rear View

Figure 4
Left Side View

1. Security Lock Slot
2. Vent
3. USB 3.2 Gen 1 Type-A Ports
4. USB 2.0 Port
5. Microphone-In Jack
6. 2-In-1 Audio Jack (Headphone and Microphone)
7. Speaker

LEFT SIDE VIEW

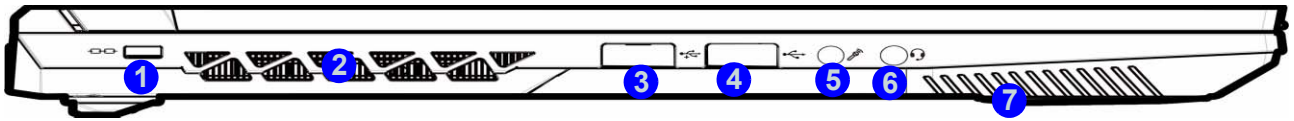

Figure 5
Rear View

1. Vent
2. HDMI-Out Port
3. Mini DisplayPort 1.4
4. DC-In Jack
5. Thunderbolt 4 Port

REAR VIEW

External Locator - Bottom View

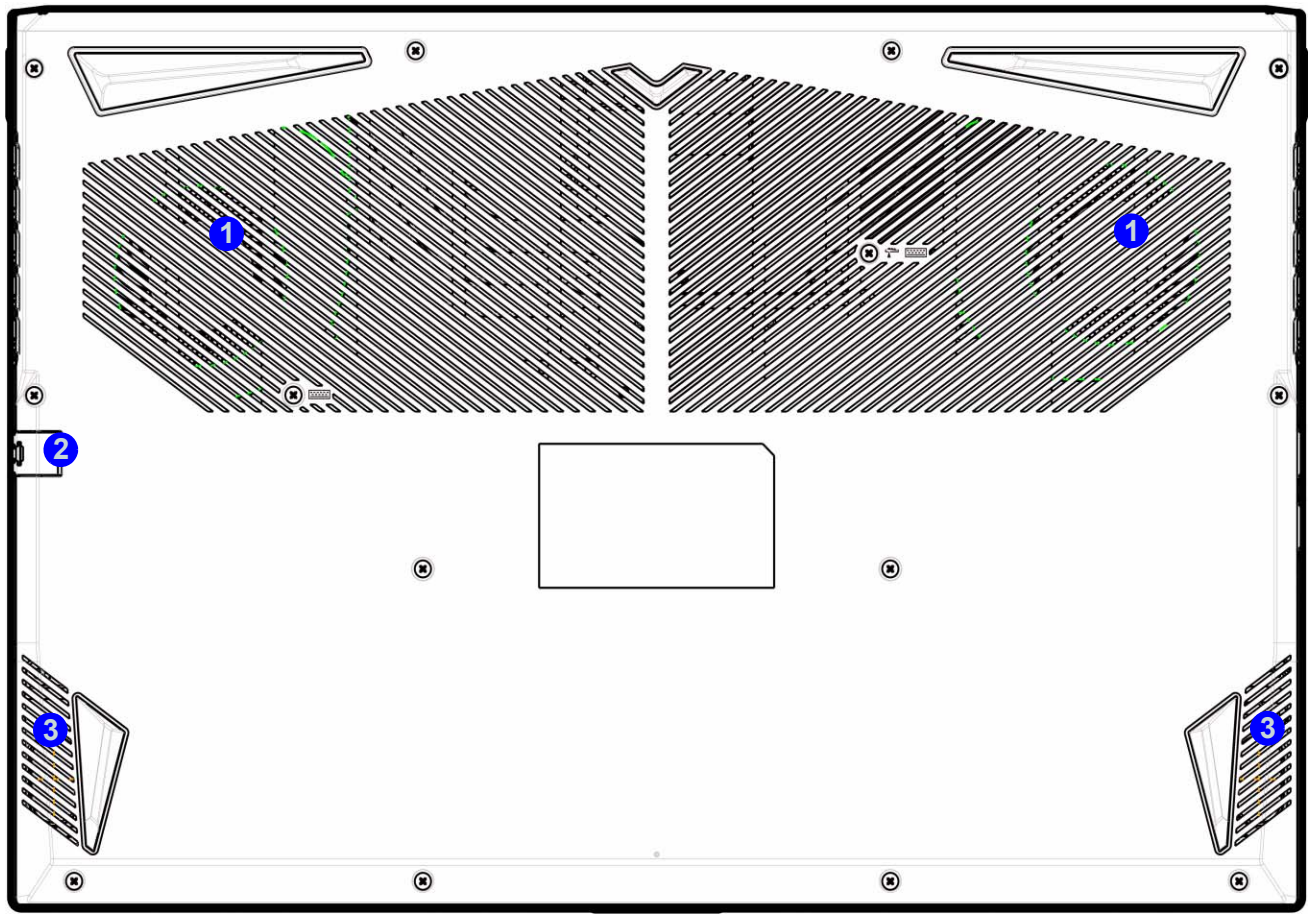

Figure 6
Bottom View

1. Vent
2. RJ-45 LAN Jack
3. Speakers

Overheating

To prevent your computer from overheating, make sure nothing blocks any vent while the computer is in use.

Figure 7
Mainboard Top Key Parts

Mainboard Overview - Top (Key Parts)

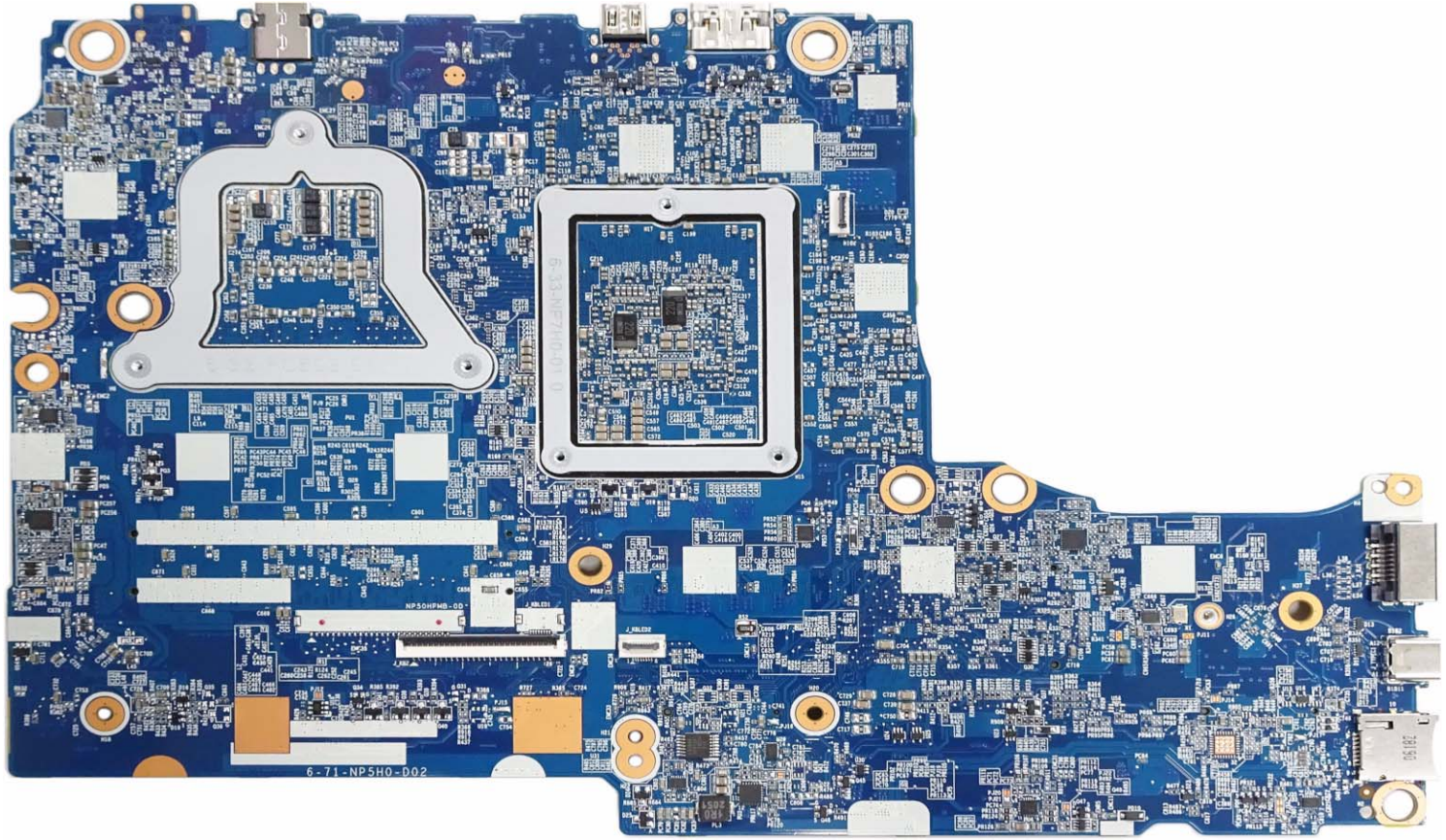

Mainboard Overview - Bottom (Key Parts)

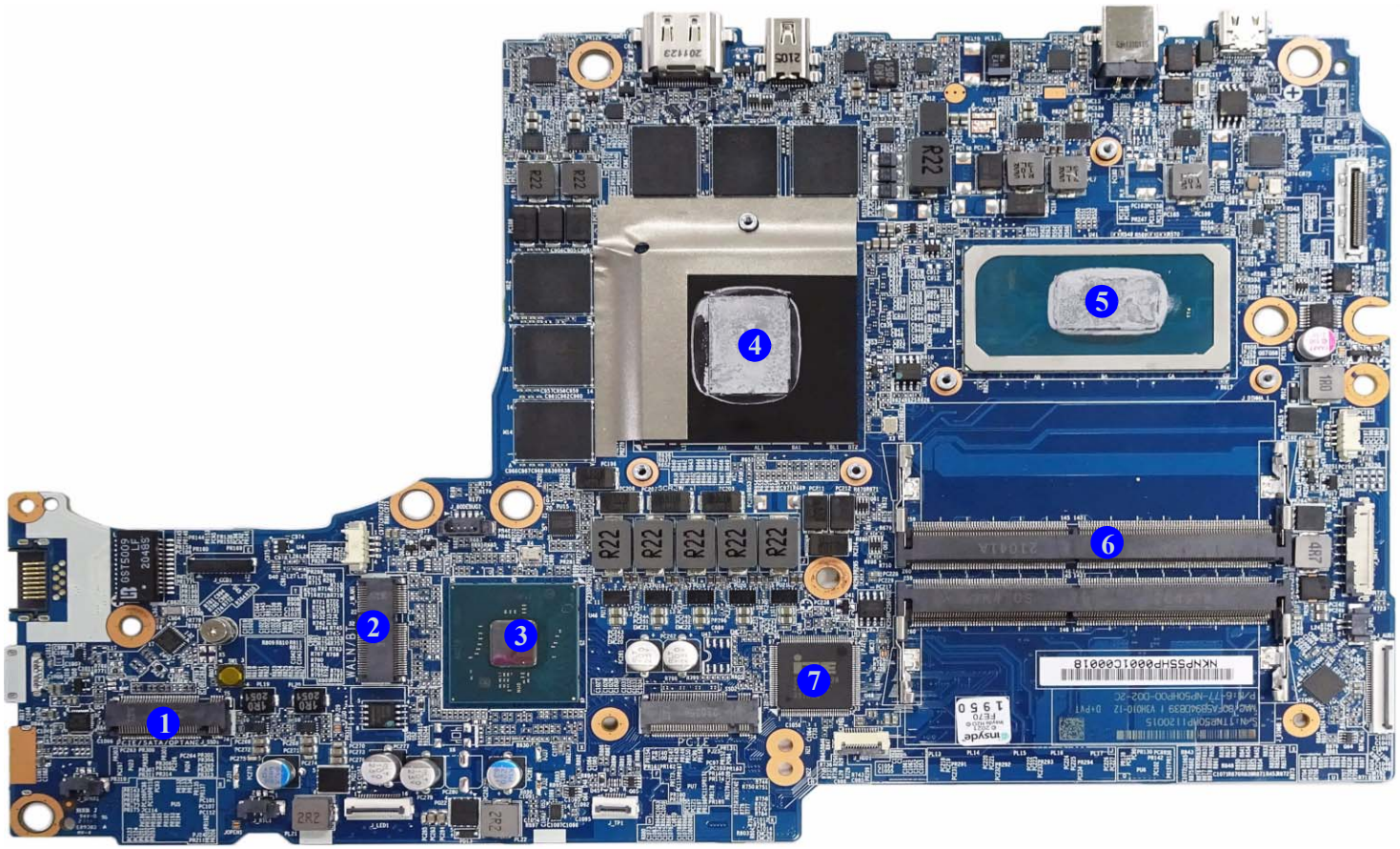

Figure 8
Mainboard Bottom Key Parts

1. Mini-Card Connector (M.2 SSD Module)
2. Mini-Card Connector (WLAN Module)
3. PCH
4. GPU
5. CPU
6. Memory Slots DDR4 SO-DIMM
7. KBC-ITE IT5570

Mainboard Overview - Top (Connectors)

Figure 9
Mainboard Top Connectors

1. DC-In Jack
2. Mini Display Port
3. HDMI Port
4. Keyboard Cable Connector
5. LED KB Connector
6. MicroSD Card Reader
7. USB 3.2 Gen 2 Type-C Port
8. RJ-45 LAN Jack

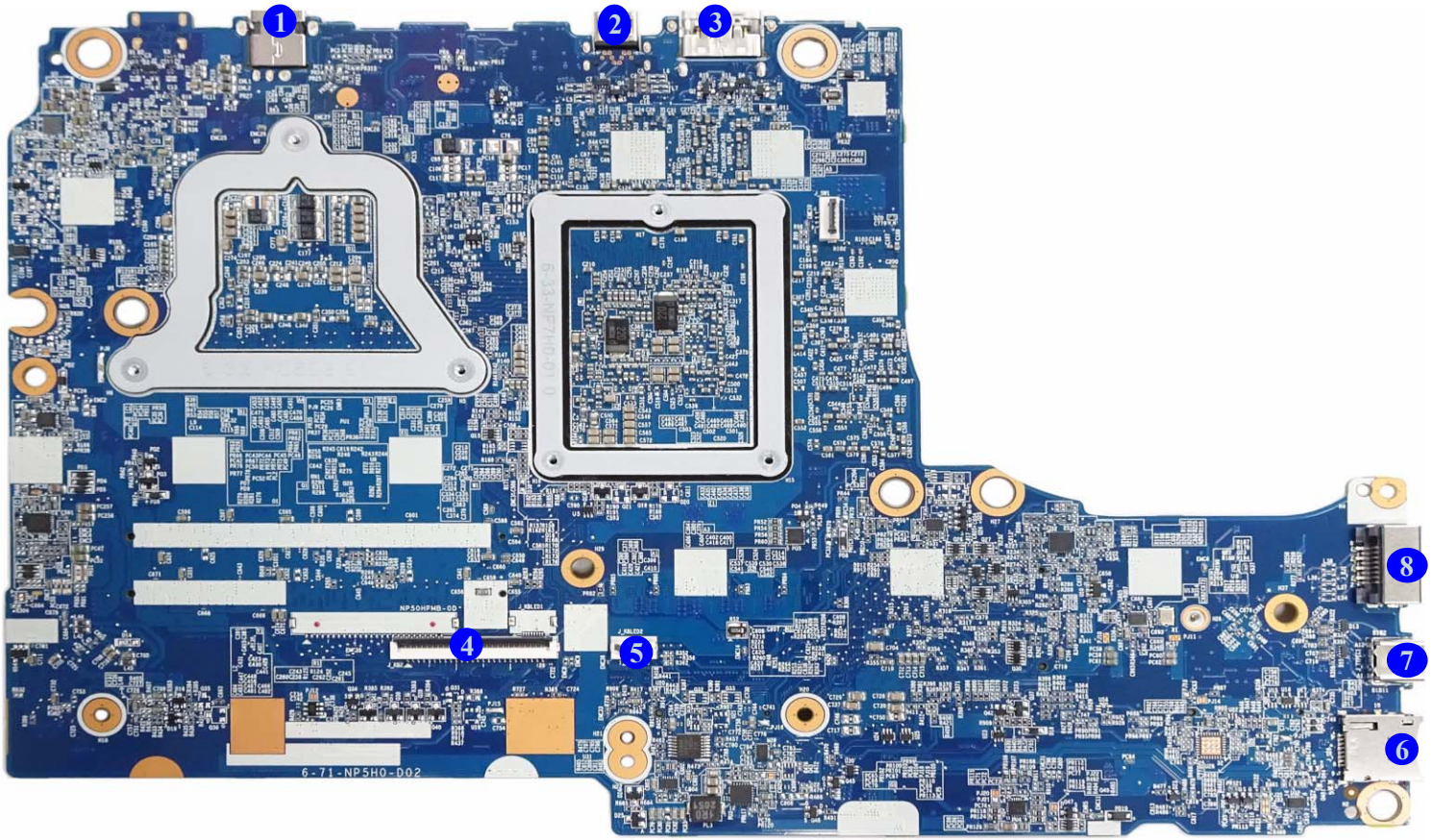

Mainboard Overview - Bottom (Connectors)

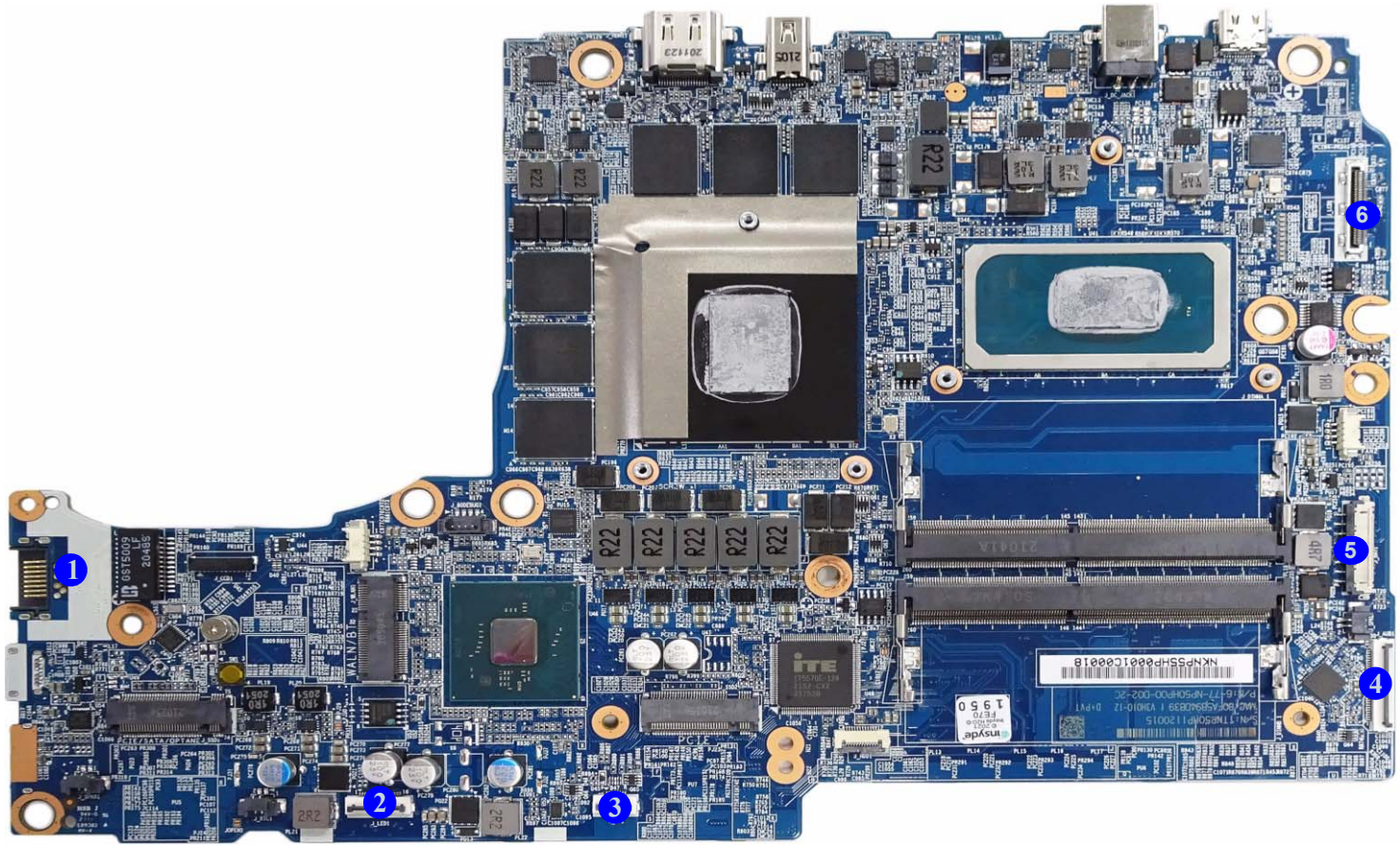

Figure 10
Mainboard Bottom Connectors

1. RJ-45 LAN Jack
2. LED Connector
3. Clickpad Cable Connector
4. Audio Connector
5. Battery Connector
6. LCD Connector

Chapter 2: Disassembly

Overview

This chapter provides step-by-step instructions for disassembling the ***NP50HP / NP55HP-HM*** series notebook's parts and subsystems. When it comes to reassembly, reverse the procedures (unless otherwise indicated).

We suggest you completely review any procedure before you take the computer apart.

Procedures such as upgrading/replacing the RAM, optical device and hard disk are included in the User's Manual but are repeated here for your convenience.

To make the disassembly process easier each section may have a box in the page margin. Information contained under the figure # will give a synopsis of the sequence of procedures involved in the disassembly procedure. A box with a lists the relevant parts you will have after the disassembly process is complete. **Note**: The parts listed will be for the disassembly procedure listed ONLY, and not any previous disassembly step(s) required. Refer to the part list for the previous disassembly procedure. The amount of screws you should be left with will be listed here also.

A box with a will also provide any possible helpful information. A box with a contains warnings.

An example of these types of boxes are shown in the sidebar.

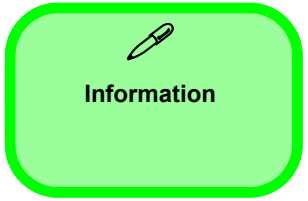

NOTE: All disassembly procedures assume that the system is turned **OFF**, and disconnected from any power supply (the battery is removed too).

Maintenance Tools

The following tools are recommended when working on the notebook PC:

- M3 Philips-head screwdriver
- M2.5 Philips-head screwdriver (magnetized)
- M2 Philips-head screwdriver
- Small flat-head screwdriver
- Pair of needle-nose pliers
- Anti-static wrist-strap

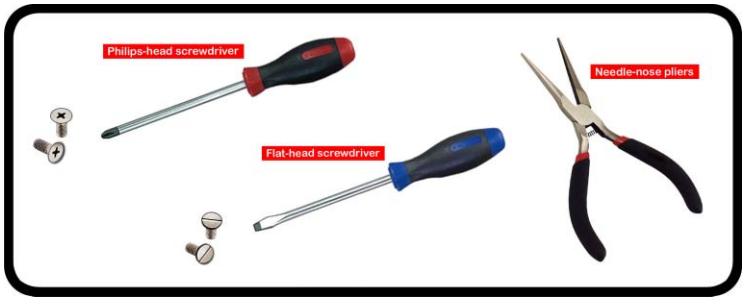

Connections

Connections within the computer are one of four types:

Locking collar sockets for ribbon connectors	To release these connectors, use a small flat-head screwdriver to gently pry the locking collar away from its base. When replacing the connection, make sure the connector is oriented in the same way. The pin1 side is usually not indicated.
Pressure sockets for multi-wire connectors	To release this connector type, grasp it at its head and gently rock it from side to side as you pull it out. Do not pull on the wires themselves. When replacing the connection, do not try to force it. The socket only fits one way.
Pressure sockets for ribbon connectors	To release these connectors, use a small pair of needle-nose pliers to gently lift the connector away from its socket. When replacing the connection, make sure the connector is oriented in the same way. The pin1 side is usually not indicated.
Board-to-board or multi-pin sockets	To separate the boards, gently rock them from side to side as you pull them apart. If the connection is very tight, use a small flat-head screwdriver - use just enough force to start.

Maintenance Precautions

The following precautions are a reminder. To avoid personal injury or damage to the computer while performing a removal and/or replacement job, take the following precautions:

1. **Don't drop it**. Perform your repairs and/or upgrades on a stable surface. If the computer falls, the case and other components could be damaged.
2. **Don't overheat it**. Note the proximity of any heating elements. Keep the computer out of direct sunlight.
3. **Avoid interference**. Note the proximity of any high capacity transformers, electric motors, and other strong magnetic fields. These can hinder proper performance and damage components and/or data. You should also monitor the position of magnetized tools (i.e. screwdrivers).
4. **Keep it dry**. This is an electrical appliance. If water or any other liquid gets into it, the computer could be badly damaged.
5. **Be careful with power**. Avoid accidental shocks, discharges or explosions.
   •Before removing or servicing any part from the computer, turn the computer off and detach any power supplies.
   •When you want to unplug the power cord or any cable/wire, be sure to disconnect it by the plug head. Do not pull on the wire.
6. **Peripherals** – Turn off and detach any peripherals.
7. **Beware of static discharge**. ICs, such as the CPU and main support chips, are vulnerable to static electricity. Before handling any part in the computer, discharge any static electricity inside the computer. When handling a printed circuit board, do not use gloves or other materials which allow static electricity buildup. We suggest that you use an anti-static wrist strap instead.
8. **Beware of corrosion**. As you perform your job, avoid touching any connector leads. Even the cleanest hands produce oils which can attract corrosive elements.
9. **Keep your work environment clean**. Tobacco smoke, dust or other air-born particulate matter is often attracted to charged surfaces, reducing performance.
10. **Keep track of the components**. When removing or replacing any part, be careful not to leave small parts, such as screws, loose inside the computer.

Power Safety Warning

Before you undertake any upgrade procedures, make sure that you have turned off the power, and disconnected all peripherals and cables (including telephone lines and power cord). It is advisable to also remove your battery in order to prevent accidentally turning the machine on.

Cleaning

Do not apply cleaner directly to the computer, use a soft clean cloth.
Do not use volatile (petroleum distillates) or abrasive cleaners on any part of the computer.
(For Computer Models Supplied with Light Blue Cleaning Cloth) Some computer models in this series come supplied with a light blue cleaning cloth. To clean the computer case with this cloth follow the instructions below.

- Power off the computer and peripherals.
- Disconnect the AC/DC adapter from the computer.
- Use a little water to dampen the cloth slightly.
- Clean the computer case with the cloth.
- Dry the computer with a dry cloth, or allow it time to dry before turning on.
- Reconnect the AC/DC adapter and turn the computer on.

Disassembly Steps

The following table lists the disassembly steps, and on which page to find the related information. **PLEASE PERFORM THE DISASSEMBLY STEPS IN THE ORDER INDICATED.**

To remove the Battery:

1. Remove the battery *page 2 - 5*

To remove the Keyboard:

1. Remove the battery *page 2 - 5*
2. Remove the keyboard *page 2 - 7*

To remove the M.2 SSD:

1. Remove the battery *page 2 - 5*
2. Remove the M.2 SSD-1 *page 2 - 8*
3. Remove the M.2 SSD-2 *page 2 - 8*

To remove the System Memory:

1. Remove the battery *page 2 - 5*
2. Remove the system memory *page 2 - 10*

To remove the Wireless LAN Module:

1. Remove the battery *page 2 - 5*
2. Remove the WLAN *page 2 - 11*

Removing the Battery

1. Turn **off** the computer, turn it over.
2. Remove screws 1 - 14 (*Figure 1a*).
3. Carefully lift the bottom case 15 up in the direction of the arrow at point 16 and remove it 17 (*Figure 1b*).

Figure 1
Battery Removal

a. Remove the screws.
b. Remove the bottom case.

a.

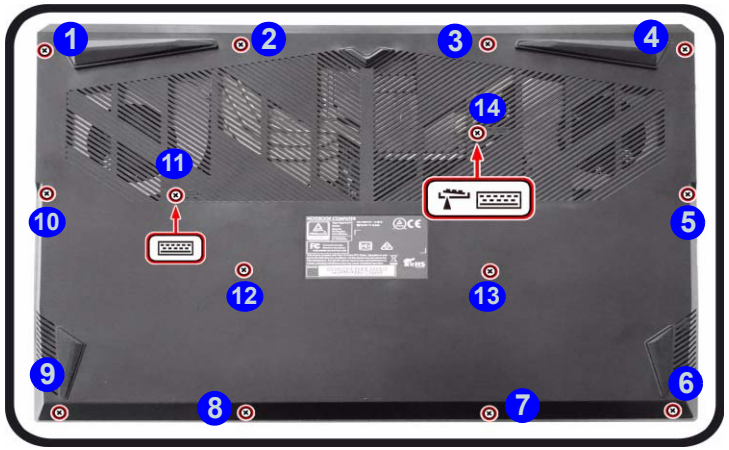

b.

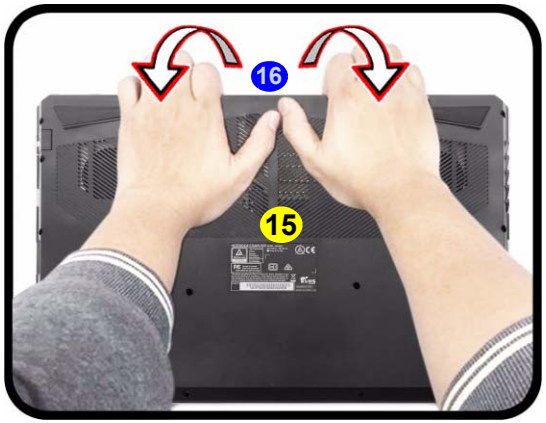

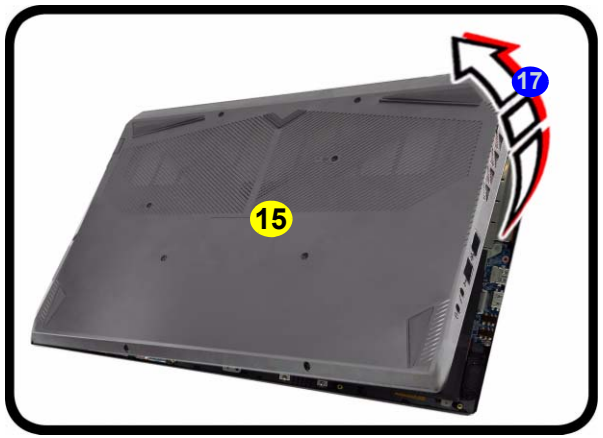

15. Bottom Case

- 14 Screws

Figure 2
Battery Removal (cont'd.)

d. Locate the battery.
e. Disconnect the cable and remove the screws.
f. Lift the battery off the computer.

4. The battery will be visible at point 18 on the computer (***Figure 2d***).
5. Carefully disconnect the cable 19, then remove screws 20 - 24 (***Figure 2e***).
6. Lift the battery 25 off the computer (***Figure 2f***).
7. Reverse the process to install a new battery (do not forget to replace all the screws and bottom cover).

d.

e.

f.

25. Battery

- 5 Screws

Removing the Keyboard

1. Turn **off** the computer, turn it over, remove the battery (*page 2 - 5*).
2. Remove screws 1 - 2 from the bottom of the computer.
3. Open it up with the LCD on a flat surface before pressing at point 3 to release the keyboard module (use the special eject stick 4 to do this) while releasing the keyboard in the direction of the arrow 5 as shown (*Figure 1a*).
4. Carefully lift the keyboard 6 up, being careful not to bend the keyboard ribbon cable 7. Disconnect the keyboard ribbon cable 7 from the locking collar socket by using a flat-head screwdriver to pry the locking collar pins 8 away from the base (*Figure 1b*).
5. Carefully lift the keyboard 6 off the computer (*Figure 1c*).

a.

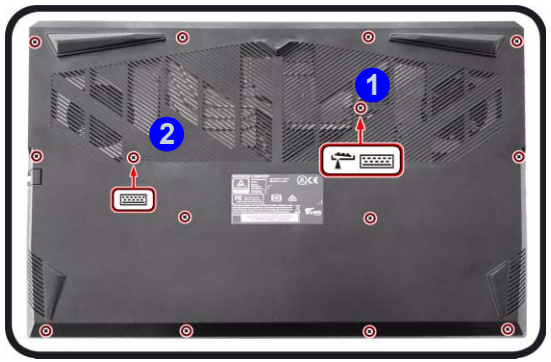

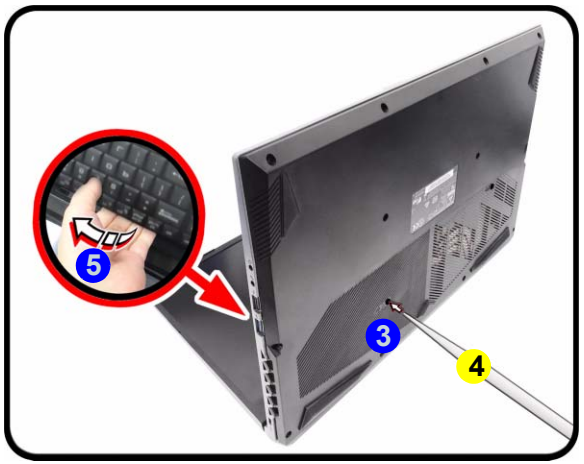

b.

c.

Figure 1
Keyboard Removal

a. Remove the screws from the bottom of the computer and then eject the keyboard using a special eject stick to push the keyboard out while releasing the keyboard as shown.
b. Lift the keyboard up and disconnect the keyboard ribbon cable from the locking collar socket.
c. Remove the keyboard.

Re-inserting the Keyboard

When re-inserting the keyboard firstly, align the keyboard tabs at the bottom of the keyboard with the slots in the case.

4. Eject Stick
6. Keyboard

- 2 Screws

Figure 2
M.2 SSD-1 Module Removal

a. Locate the M.2 SSD and remove the screw.
b. The M.2 SSD module will pop up.

Removing the M.2 SSD Module

M.2 SSD-1 Removal Procedure

1. Turn **off** the computer, turn it over, remove the battery (***page 2 - 5***).
2. The M.2 SSD module will be visible at point 1 on the mainboard. Remove the screw 2 (***Figure 2a***).
3. The M.2 SSD module 3 (***Figure 2b***) will pop-up, and you can remove it from the computer.
4. Reverse the process to install a new module (do not forget to replace the screws and make sure that the thermal pad 4 is attached).

a.

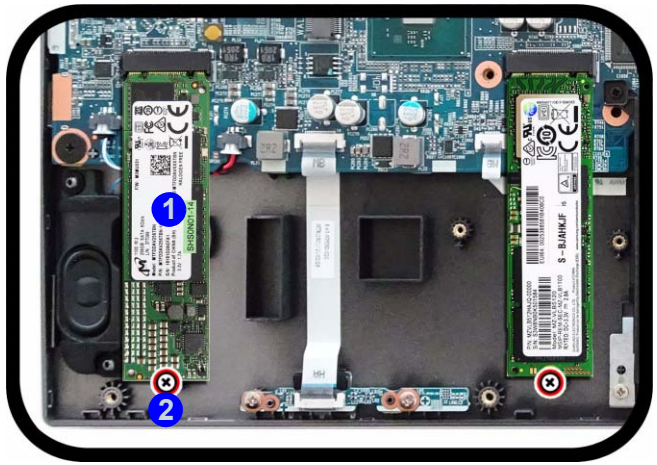

b.

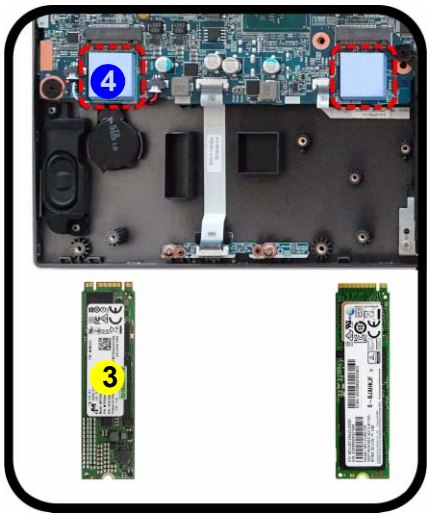

3.M2 SSD Module SATA/PCIE

- 1 Screw

M.2 SSD-2 Removal Procedure

1. Turn **off** the computer, turn it over, remove the battery (*page 2 - 5*).
2. The M.2 SSD module will be visible at point 1 on the mainboard. Remove the screw 2 (*Figure 3a*).
3. The M.2 SSD module 3 (*Figure 3b*) will pop-up, and you can remove it from the computer.
4. Reverse the process to install a new module (do not forget to replace the screws and make sure that the thermal pad 4 is attached).

Figure 3
M.2 SSD-2 Module Removal

a. Locate the M.2 SSD and remove the screw.
b. The M.2 SSD module will pop up.

a.

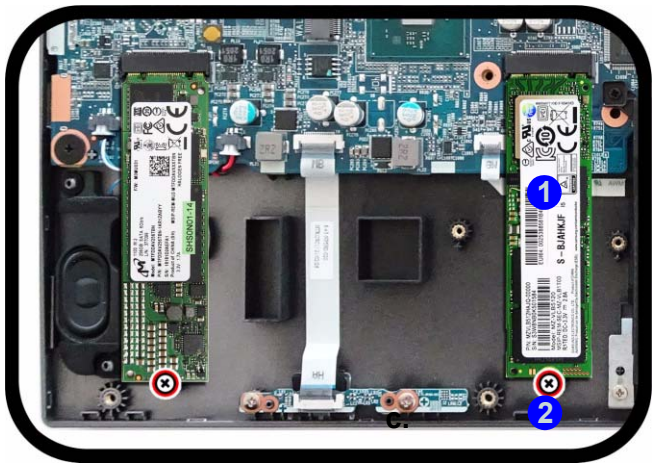

b.

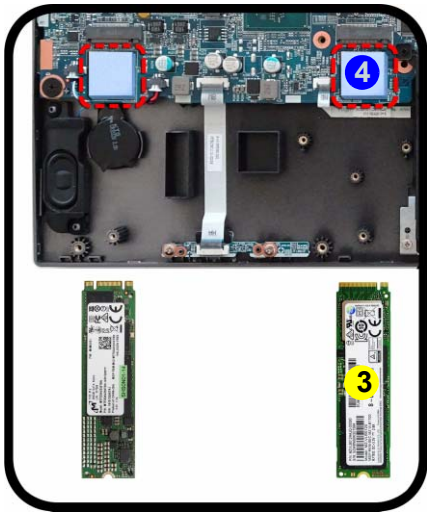

3.M2 SSD Module
PCIE only

- 1 Screw

Figure 4
RAM Module Removal

a. The RAM modules will be visible at point 1 on the mainboard.
b. Pull the release latches.
c. Remove the module.

Contact Warning

Be careful not to touch the metal pins on the module's connecting edge. Even the cleanest hands have oils which can attract particles, and degrade the module's performance.

4. RAM Module

Removing the System Memory (RAM)

The computer has four memory sockets for 260 pin Small Outline Dual In-line Memory Modules (SO-DIMM) supporting DDR4 Up to 3200 MHz. The main memory can be expanded up to 32GB. The total memory size is automatically detected by the POST routine once you turn on your computer.

Memory Upgrade Process

1. Turn **off** the computer, turn it over, remove the battery (***page 2 - 5***).
2. The RAM-2 modules will be visible at point 1 on the mainboard (***Figure 4a***).
3. Gently pull the two release latches (2 & 3) on the sides of the memory socket in the direction indicated by the arrows (***Figure 4b***). The RAM module 4 will pop-up (***Figure 4c***), and you can then remove it.
4. Pull the latches to release the second module if necessary.
5. Insert a new module holding it at about a 30° angle and fit the connectors firmly into the memory slot.
6. The module will only fit one way as defined by its pin alignment. Make sure the module is seated as far into the slot as it will go. DO NOT FORCE IT; it should fit without much pressure.
7. Press the module in and down towards the mainboard until the slot levers click into place to secure the module.
8. Replace the bottom cover and the screws (see ***page 2 - 5***).
9. Restart the computer to allow the BIOS to register the new memory configuration as it starts up.

a.

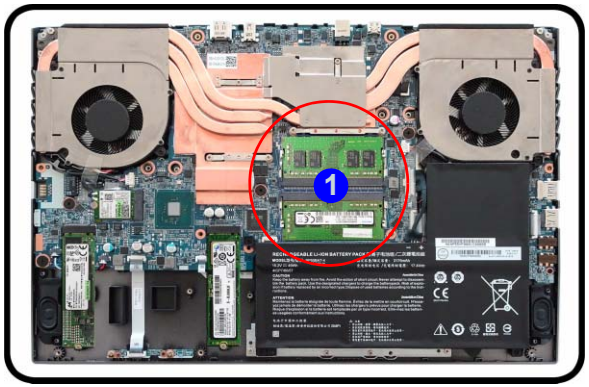

b.

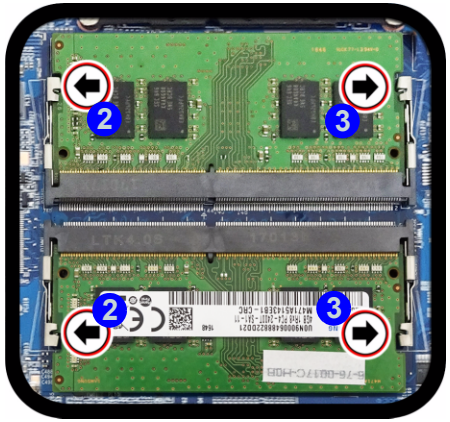

c.

Removing the Wireless LAN Module

1. Turn **off** the computer, turn it over, remove the battery (*page 2 - 5*).
2. The Wireless LAN module will be visible at point 1 on the mainboard (*Figure 5a*).
3. Carefully disconnect the cables 2 & 3, and then remove the screw 4 (*Figure 5b*)
4. The Wireless LAN module 5 (*Figure 5c*) will pop-up, and you can remove it from the computer.

a.

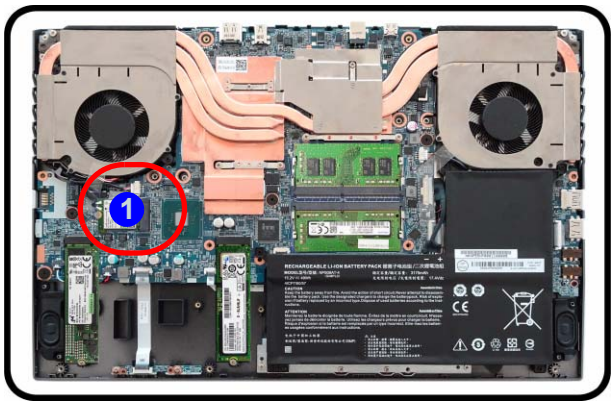

b.

c.

Figure 5
Wireless LAN Module Removal

a. Locate the WLAN.
b. Disconnect the cables and remove the screw.
c. The WLAN module will pop up.

Note: Make sure you reconnect the antenna cable to the "1 + 2" socket (*Figure 5b*).

5.Wireless LAN Module

- 1 Screw

Wireless LAN, Combo Module Cables

Note that the cables for connecting to the antennae on WLAN, WLAN & Bluetooth Combo, and LTE modules are not labelled. The cables/covers (each cable will have either a black or transparent cable cover) are color coded for identification as outlined in the table below.

Module Type	Antenna Type	Cable Color	Cable Cover Type
WLAN/WLAN & Bluetooth Combo	WL 1	Black	Transparent
	WL 2	Black	White

Cable 1 is usually connected to antenna 1 on the module, and cable 2 to antenna 2.

Appendix A:Part Lists

This appendix breaks down the ***NP50HP / NP55HP-HM*** series notebook's construction into a series of illustrations. The component part numbers are indicated in the tables opposite the drawings.

Note: This section indicates the *manufacturer's* part numbers. Your organization may use a different system, so be sure to cross-check any relevant documentation.

Note: Some assemblies may have parts in common (especially screws). However, the part lists DO NOT indicate the total number of duplicated parts used.

Note: Be sure to check any update notices. The parts shown in these illustrations are appropriate for the system at the time of publication. Over the product life, some parts may be improved or re-configured, resulting in *new* part numbers.

Part List Illustration Location

The following table indicates where to find the appropriate part list illustration.

Table A - 1
Part List Illustration Location

Part	NP50HP	NP55HP-HM
Top	*page A - 3*	*page A - 4*
Bottom	*page A - 5*	
Main Board	*page A - 6*	
LCD	*page A - 7*	*page A - 8*

Top (NP50HP)

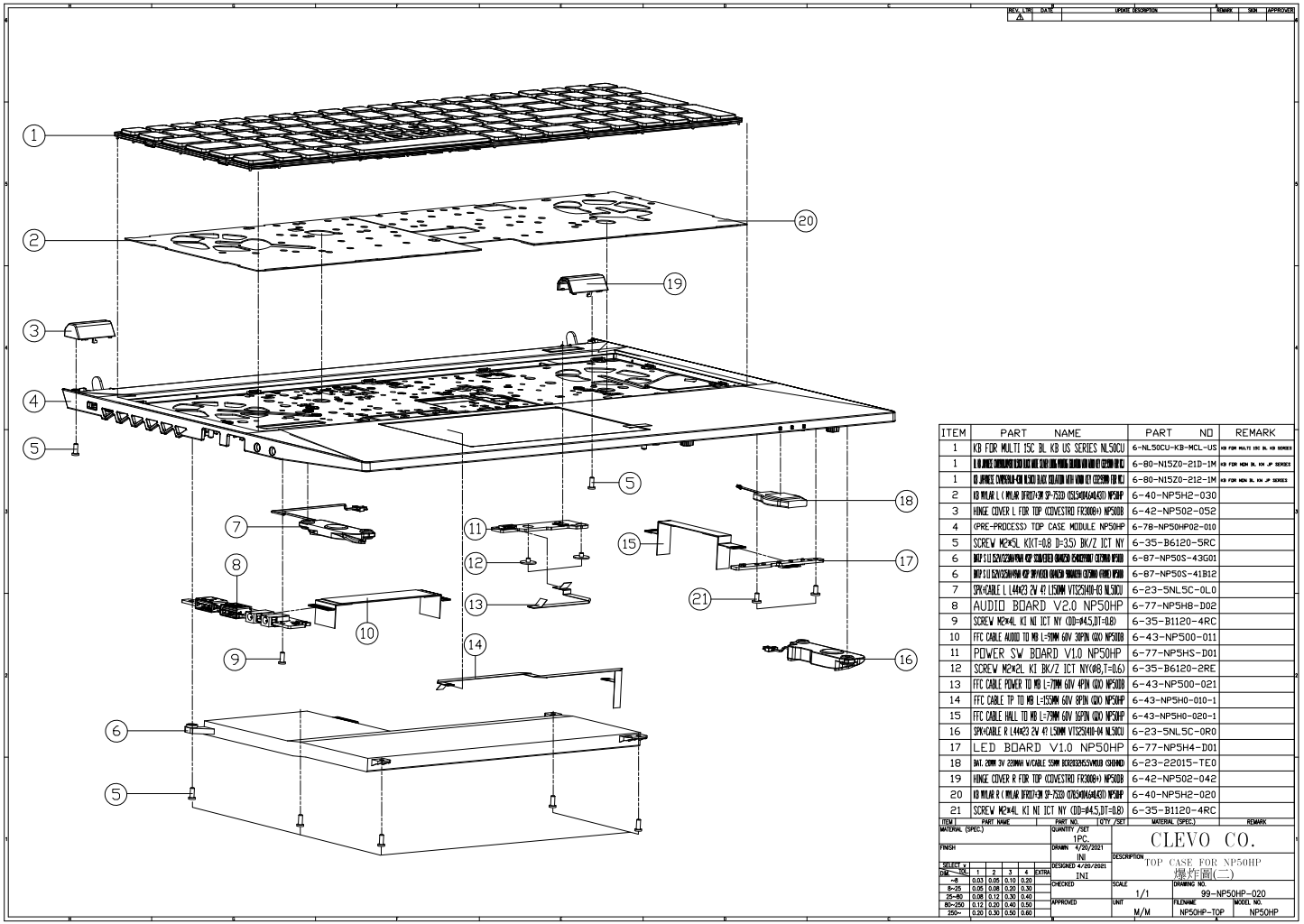

ITEM	PART NAME	PART NO	REMARK
1	KB FOR MULTI 15C BL KB US SERIES NL50CU	6-NL50CU-KB-MCL-US	KB FOR MULTI 15C BL KB SERIES
1	KB JAPANESE OVERLAY-CUR NL50CU BLACK COLLATION WITH WIND CUT CCCFB90 FOR NL	6-80-N15Z0-21D-1M	KB FOR MDN BL KN JP SERIES
1	KB JAPANESE OVERLAY-CUR NL50CU BLACK COLLATION WITH WIND CUT CCCFB90 FOR NL	6-80-N15Z0-212-1M	KB FOR MDN BL KN JP SERIES
2	KB MYLAR L (MYLAR DFR07+3M SP-7530 (0515404&404530) NP50HP	6-40-NP5H2-030	
3	HINGE COVER L FOR TOP (CONVESTRO FR3008+) NP50HB	6-42-NP502-052	
4	(PRE-PROCESS) TOP CASE MODULE NP50HP	6-78-NP50HP02-010	
5	SCREW M2*5L K1(T=0.8 D=3.5) BK/Z ICT NY	6-35-B6120-5RC	
6	MAP S U 52V/223A/PVM 42P 30W/VEEN 0A4C30 E2402PVM1 (3)7.0MM NP50HB	6-87-NP50S-43G01	
6	MAP S U 52V/223A/PVM 42P 30W/VEEN 0A4C30 T0A4C30 (3)7.0MM (FAN) NP50HB	6-87-NP50S-41B12	
7	SPK+CABLE L L44423 2V 4? L50MM VT5254U0-03 NL50CU	6-23-5NL5C-0L0	
8	AUDIO BOARD V2.0 NP50HP	6-77-NP5H8-D02	
9	SCREW M2*4L K1 NI ICT NY (DD=#4.5,DT=0.8)	6-35-B1120-4RC	
10	FFC CABLE AUDIO TO MB L=90MM 60V 30PIN (0D) NP50HB	6-43-NP500-011	
11	POWER SW BOARD V1.0 NP50HP	6-77-NP5HS-D01	
12	SCREW M2*2L K1 BK/Z ICT NY(#8,T=0.6)	6-35-B6120-2RE	
13	FFC CABLE POWER TO MB L=70MM 60V 4PIN (0D) NP50HB	6-43-NP500-021	
14	FFC CABLE TP TO MB L=153MM 60V 8PIN (0D) NP50HP	6-43-NP5H0-010-1	
15	FFC CABLE HALL TO MB L=79MM 60V 16PIN (0D) NP50HP	6-43-NP5H0-020-1	
16	SPK+CABLE R L44423 2V 4? L50MM VT5254U0-04 NL50CU	6-23-5NL5C-0R0	
17	LED BOARD V1.0 NP50HP	6-77-NP5H4-D01	
18	BAT. 20MM 3V 220MAH W/CABLE 50MM BC0283655VM018 (3)40ND	6-23-22015-TE0	
19	HINGE COVER R FOR TOP (CONVESTRO FR3008+) NP50HB	6-42-NP502-042	
20	KB MYLAR R (MYLAR DFR07+3M SP-7530 (0715404&404530) NP50HP	6-40-NP5H2-020	
21	SCREW M2*4L K1 NI ICT NY (DD=#4.5,DT=0.8)	6-35-B1120-4RC	

ITEM	PART NAME	PART NO.	QTY /SET	MATERIAL (SPEC.)	REMARK

MATERIAL (SPEC.) | QUANTITY /SET 1PC. | CLEVO CO.
FINISH | DRAWN 4/20/2021 INI | DESCRIPTION TOP CASE FOR NP50HP 爆炸圖(二)
DESIGNED 4/20/2021 TN1 | CHECKED | SCALE 1/1 | DRAWING NO. 99-NP50HP-020
APPROVED | UNIT M/M | FILENAME NP50HP-TOP | MODEL NO. NP50HP

SELECT *	1	2	3	4	EXTRA
DIM. NO.					
-8	0.03	0.05	0.10	0.20	
8-25	0.05	0.08	0.20	0.30	
25-80	0.08	0.12	0.30	0.40	
80-250	0.12	0.20	0.40	0.50	
250-	0.20	0.30	0.50	0.60	

Figure A - 1
Top (NP50HP)

Top (NP55HP-HM)

Figure A - 2
Top (NP55HP-HM)

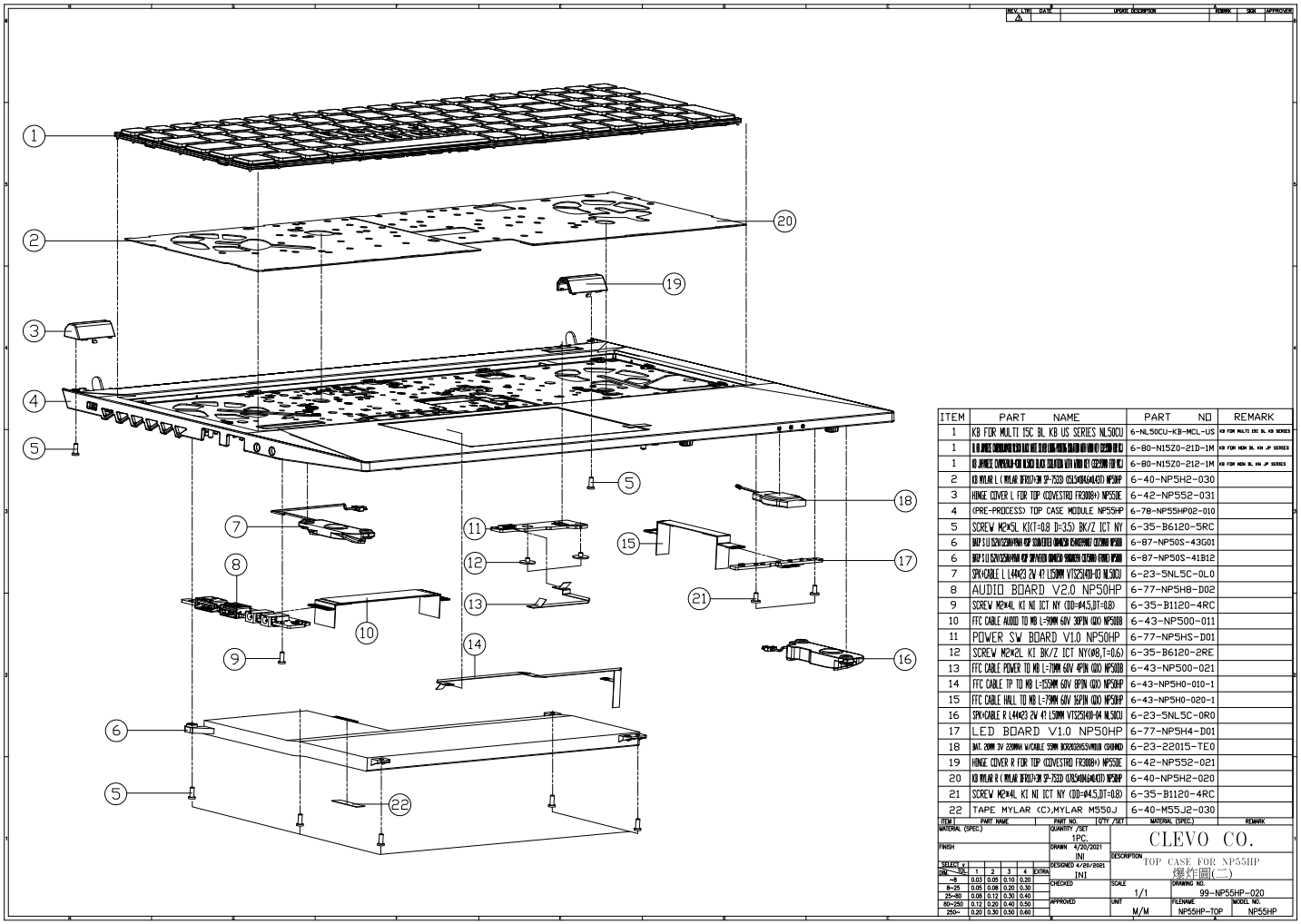

ITEM	PART NAME	PART NO	REMARK
1	KB FOR MULTI ISC BL KB US SERIES NL50CU	6-NL50CU-KB-MCL-US	KB FOR MULTI ISC BL KB SERIES
1	KB JAPANESE CHIYOKODA-KOM NCSCU BLACK SUBLETTER WITH WIND KEY (SEPERM FOR NL)	6-80-N15Z0-21D-1M	KB FOR NCM BL KIN JP SERIES
1	KB JAPANESE CHIYOKODA-KOM NCSCU BLACK SUBLETTER WITH WIND KEY (SEPERM FOR NL)	6-80-N15Z0-212-1M	KB FOR NCM BL KIN JP SERIES
2	KB MYLAR L (MYLAR DF812+2M SP-75ZD (C25J40A64A43T) NP50HP	6-40-NP5H2-030	
3	HINGE COVER L FOR TOP (COVESTRO FK3008+) NP55HE	6-42-NP552-031	
4	(PRE-PROCESS) TOP CASE MODULE NP55HP	6-78-NP55HP02-010	
5	SCREW M2*5L K1(T=0.8 D=3.5) BK/Z ICT NY	6-35-B6120-5RC	
6	MAP S U1 52V/225mA/9MA KOP SOMATECH (SANKEN SMA4029MA) (SEPERM NP50HP)	6-87-NP50S-43G01	
6	MAP S U1 52V/225mA/9MA KOP SOMATECH (SANKEN SMA4029MA) (SEPERM NP50HP)	6-87-NP50S-41B12	
7	SPK+CABLE L L44*23 2V 4? L150MM VT(C25J40)-EG NL50CU	6-23-5NL5C-0L0	
8	AUDIO BOARD V2.0 NP50HP	6-77-NP5H8-D02	
9	SCREW M2*4L K1 NI ICT NY (DD=#4.5,DT=0.8)	6-35-B1120-4RC	
10	FFC CABLE AUDIO TO MB L=90MM 60V 30PIN (20) NP50HP	6-43-NP500-011	
11	POWER SW BOARD V1.0 NP50HP	6-77-NP5HS-D01	
12	SCREW M2*2L K1 BK/Z ICT NY(#8,T=0.6)	6-35-B6120-2RE	
13	FFC CABLE POWER TO MB L=70MM 60V 4PIN (20) NP50HP	6-43-NP500-021	
14	FFC CABLE TP TO MB L=155MM 60V 8PIN (20) NP50HP	6-43-NP5H0-010-1	
15	FFC CABLE HALL TO MB L=79MM 60V 5PIN (20) NP50HP	6-43-NP5H0-020-1	
16	SPK+CABLE R L44*23 2V 4? L150MM VT(C25J40)-EH NL50CU	6-23-5NL5C-0R0	
17	LED BOARD V1.0 NP50HP	6-77-NP5H4-D01	
18	BAT. 20MM 2V 220MAH W/CABLE 55MM BC(R20)2855/MRUB (SBAND)	6-23-22015-TE0	
19	HINGE COVER R FOR TOP (COVESTRO FK3008+) NP55HE	6-42-NP552-021	
20	KB MYLAR R (MYLAR DF812+2M SP-75ZD (C25J40A64A43T) NP50HP	6-40-NP5H2-020	
21	SCREW M2*4L K1 NI ICT NY (DD=#4.5,DT=0.8)	6-35-B1120-4RC	
22	TAPE MYLAR (C),MYLAR M550J	6-40-M55J2-030	

ITEM	PART NAME	PART NO.	QTY /SET	MATERIAL (SPEC.)	REMARK

MATERIAL (SPEC.)
FINISH
QUANTITY /SET: 1PC
DRAWN: 4/20/2021 INI
DESIGNED: 4/28/2021 INI
CHECKED
APPROVED
CLEVO CO.
DESCRIPTION: TOP CASE FOR NP55HP 爆炸圖(二)
SCALE: 1/1
UNIT: M/M
DRAWING NO.: 99-NP55HP-020
FILENAME: NP55HP-TOP
MODEL NO.: NP55HP

SELECT DIM.	1	2	3	4	EXTRA
~8	0.03	0.05	0.10	0.20	
8~25	0.05	0.08	0.20	0.30	
25~80	0.08	0.12	0.30	0.40	
80~250	0.12	0.20	0.40	0.50	
250~	0.20	0.30	0.50	0.60	

Bottom

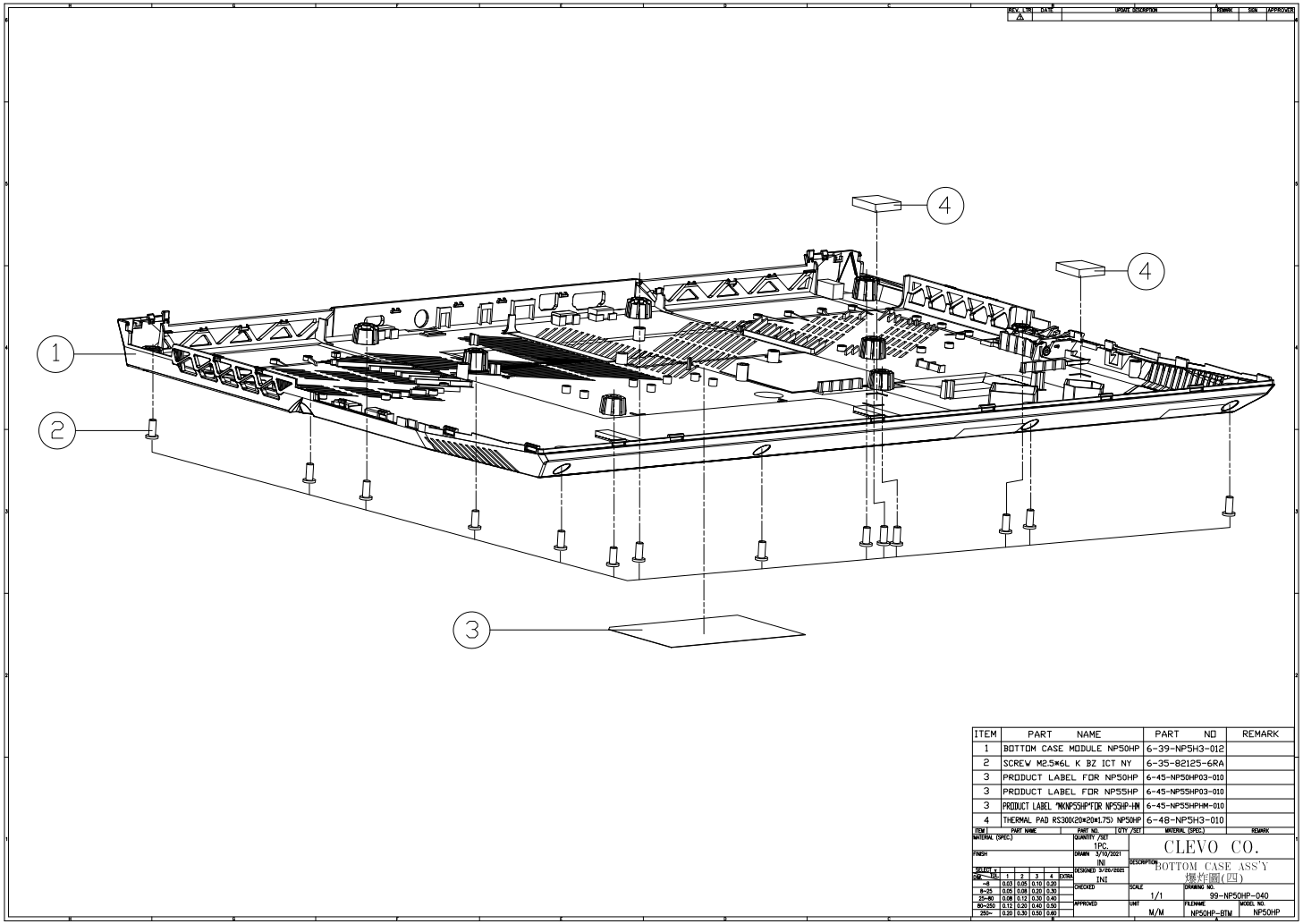

Figure A - 3
Bottom

Main Board

Figure A - 4
Main Board

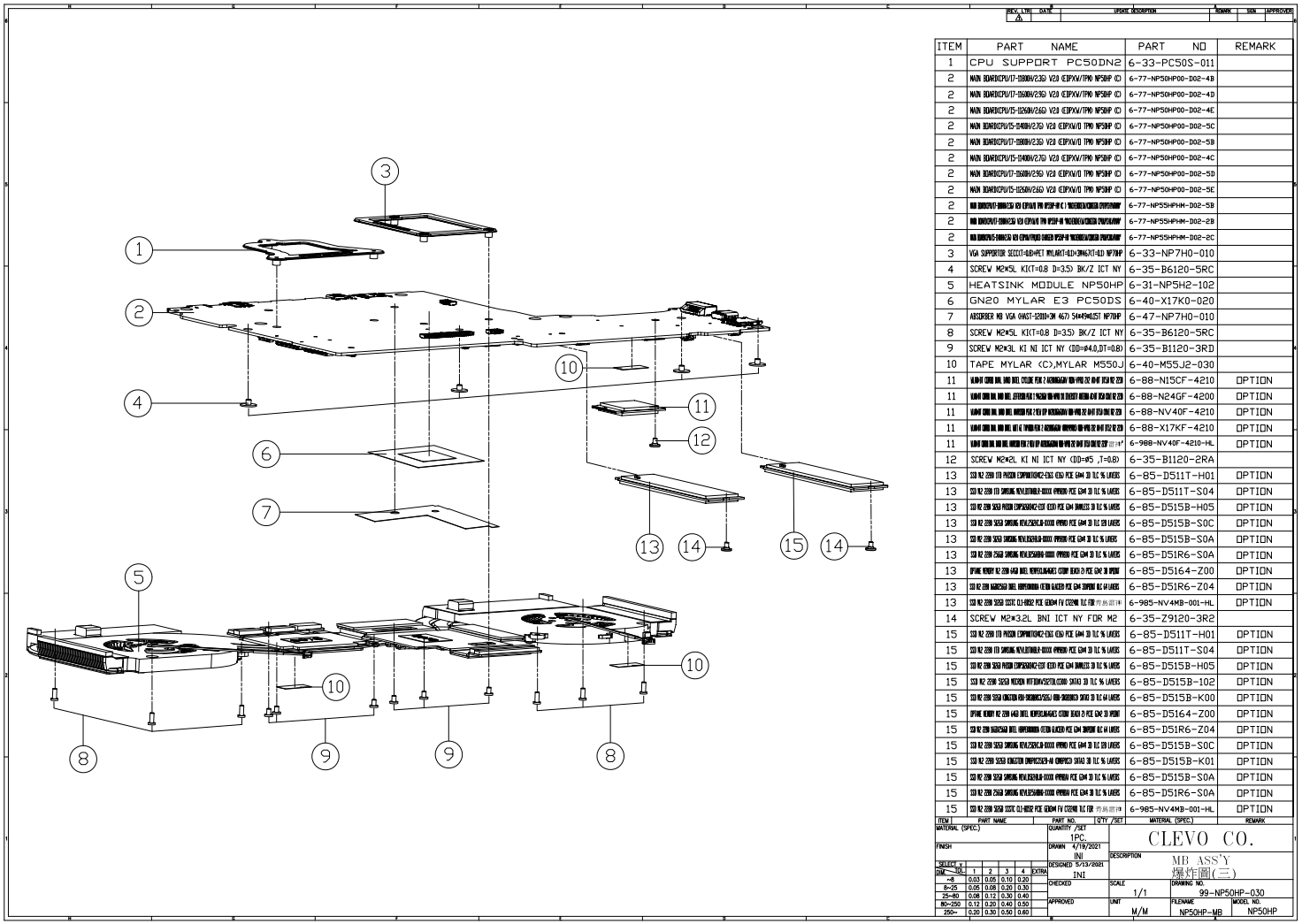

LCD (NP50HP)

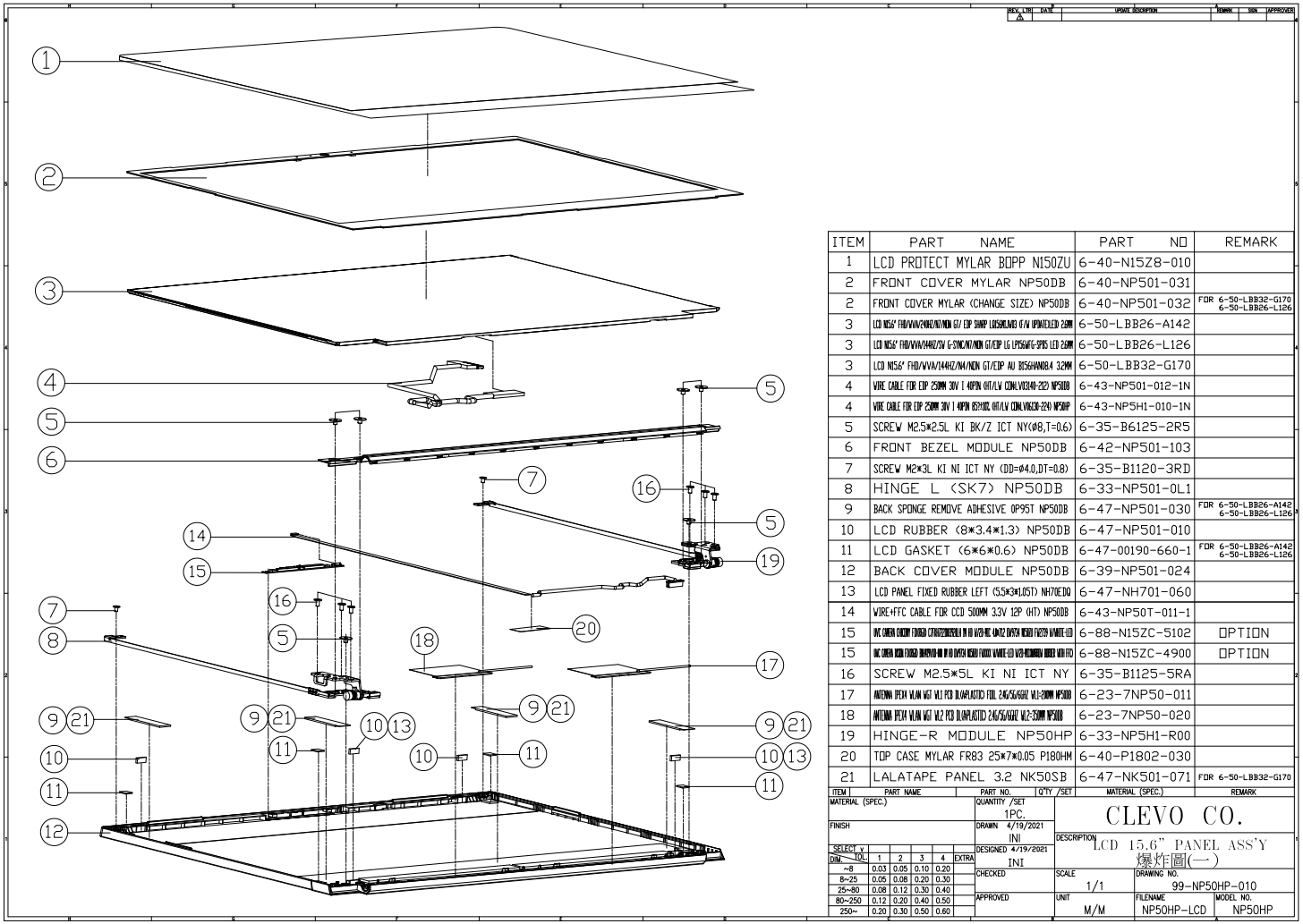

ITEM	PART NAME	PART NO	REMARK
1	LCD PROTECT MYLAR BOPP N150ZU	6-40-N15Z8-010	
2	FRONT COVER MYLAR NP50DB	6-40-NP501-031	
2	FRONT COVER MYLAR (CHANGE SIZE) NP50DB	6-40-NP501-032	FOR 6-50-LBB32-G170 6-50-LBB26-L126
3	LCD N156' FHD/WVA/240HZ/N7/NON GT/ EIP SHARP LQ156M1JW03 G/W UPWITCELED 28PIN	6-50-LBB26-A142	
3	LCD N156' FHD/WVA/144HZ/SV G-SYNC/N7/NON GT/EIP LG LP156WFG-SPB5 LED 28PIN	6-50-LBB26-L126	
3	LCD N156' FHD/WVA/144HZ/N4/NON GT/EIP AU B156HAN08.4 32PIN	6-50-LBB32-G170	
4	WIRE CABLE FOR EIP 250MM 30V 1 40PIN 0HT/L/V CONL V03140-2E2) NP50DB	6-43-NP501-012-1N	
4	WIRE CABLE FOR EIP 250MM 30V 1 40PIN (ESYHIZ 0HT/L/V CONL V06130-2E4) NP50HP	6-43-NP5H1-010-1N	
5	SCREW M2.5*2.5L KI BK/Z ICT NY(Ø8,T=0.6)	6-35-B6125-2R5	
6	FRONT BEZEL MODULE NP50DB	6-42-NP501-103	
7	SCREW M2*3L KI NI ICT NY (DD=Ø4.0,DT=0.8)	6-35-B1120-3RD	
8	HINGE L (SK7) NP50DB	6-33-NP501-0L1	
9	BACK SPONGE REMOVE ADHESIVE OP95T NP50DB	6-47-NP501-030	FOR 6-50-LBB26-A142 6-50-LBB26-L126
10	LCD RUBBER (8*3.4*1.3) NP50DB	6-47-NP501-010	
11	LCD GASKET (6*6*0.6) NP50DB	6-47-00190-660-1	FOR 6-50-LBB26-A142 6-50-LBB26-L126
12	BACK COVER MODULE NP50DB	6-39-NP501-024	
13	LCD PANEL FIXED RUBBER LEFT (5.5*3*1.05T) NH70EDQ	6-47-NH701-060	
14	WIRE+FFC CABLE FOR CCD 500MM 3.3V 12P (HT) NP50DB	6-43-NP50T-011-1	
15	INC CMOS CMOSIM FTOSCA CTWBZ0N0BZ0LN IN HD W29-HZ 4ØHZ DVP57H NCBD FW29 W/WHITE-LED	6-88-N15ZC-5102	OPTION
15	INC CMOS NCBD FIXED 3MPIXO-HD IN HD DVP57H NCBD FW0DU W/WHITE-LED W29-HZ0MMBA VIDEO WITH FRO	6-88-N15ZC-4900	OPTION
16	SCREW M2.5*5L KI NI ICT NY	6-35-B1125-5RA	
17	ANTENNA PEEM WLAN WGT W.1 PCD BLK(PLASTIC) FOIL 2.4G/5G/6GHZ WL1-200MM NP50DB	6-23-7NP50-011	
18	ANTENNA PEEM WLAN WGT W.2 PCD BLK(PLASTIC) 2.4G/5G/6GHZ W.2-350MM NP50DB	6-23-7NP50-020	
19	HINGE-R MODULE NP50HP	6-33-NP5H1-R00	
20	TOP CASE MYLAR FR83 25*7*0.05 P180HM	6-40-P1802-030	
21	LALATAPE PANEL 3.2 NK50SB	6-47-NK501-071	FOR 6-50-LBB32-G170

ITEM	PART NAME	PART NO.	Q'TY /SET	MATERIAL (SPEC.)	REMARK

MATERIAL (SPEC.)		QUANTITY /SET 1PC.	CLEVO CO.		
FINISH		DRAWN 4/19/2021 INI	DESCRIPTION LCD 15.6" PANEL ASS'Y 爆炸圖(一)		
SELECT V		DESIGNED 4/19/2021 INI			
CHECKED			SCALE 1/1	DRAWING NO. 99-NP50HP-010	
APPROVED			UNIT M/M	FILENAME NP50HP-LCD	MODEL NO. NP50HP

DIM. \ TOL.	1	2	3	4	EXTRA
~8	0.03	0.05	0.10	0.20	
8~25	0.05	0.08	0.20	0.30	
25~80	0.08	0.12	0.30	0.40	
80~250	0.12	0.20	0.40	0.50	
250~	0.20	0.30	0.50	0.60	

Figure A - 5
LCD (NP50HP)

LCD (NP55HP-HM)

Figure A - 6
LCD (NP55HP-HM)

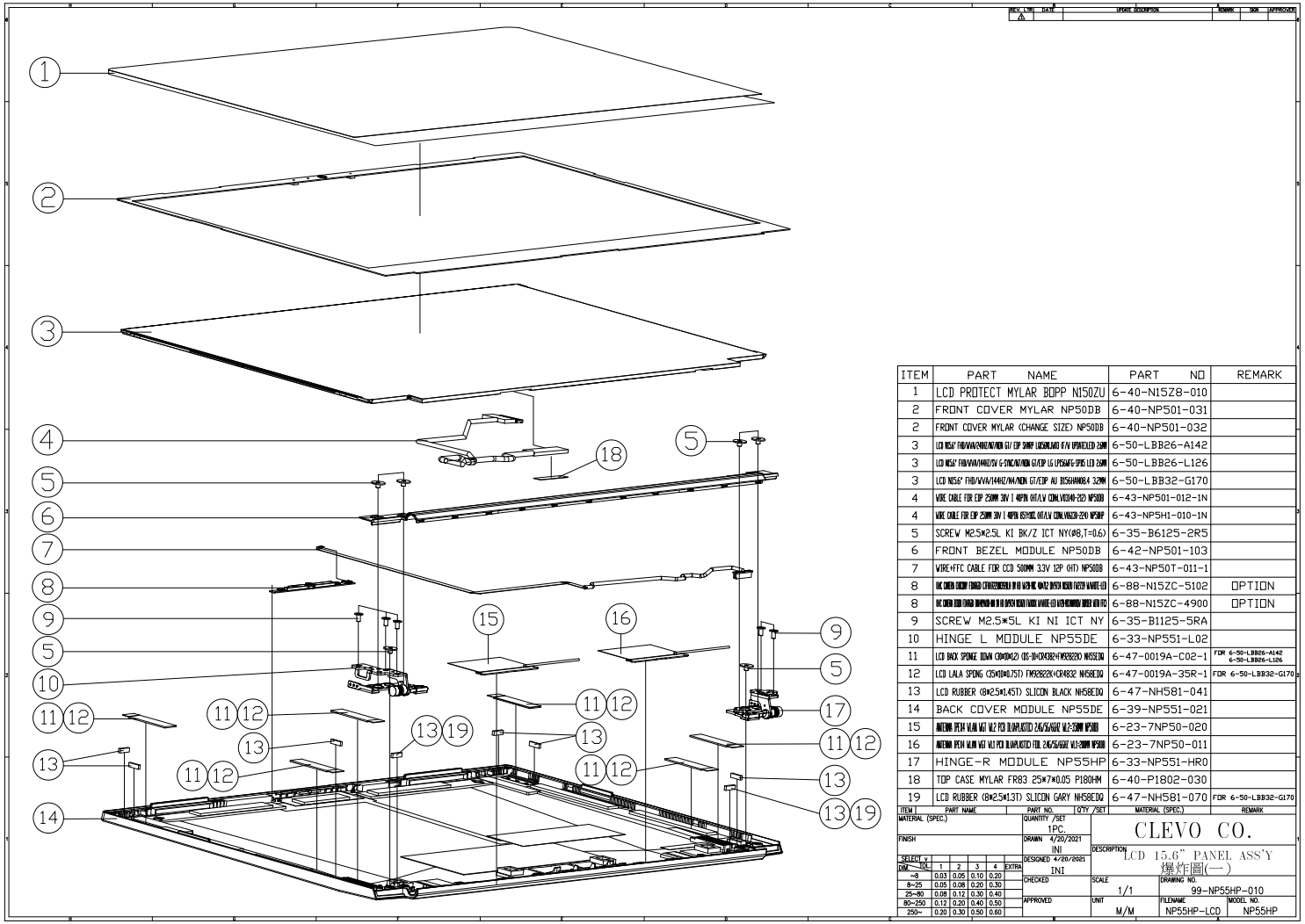

ITEM	PART NAME	PART NO	REMARK
1	LCD PROTECT MYLAR BOPP N150ZU	6-40-N15Z8-010	
2	FRONT COVER MYLAR NP50DB	6-40-NP501-031	
2	FRONT COVER MYLAR (CHANGE SIZE) NP50DB	6-40-NP501-032	
3	LCD N156' FHD/WVA/24HZ/NT/NEN GT/ EIP 30MP LUBSWLNAS F/N UPANEL(LED 26M	6-50-LBB26-A142	
3	LCD N156' FHD/WVA/144HZ/5V G-SYNC/NT/NEN GT/EIP LG LP156WFG-SPB5 LED 26M	6-50-LBB26-L126	
3	LCD N156' FHD/WVA/144HZ/NT/NEN GT/EIP AU B156HAN08.4 32MM	6-50-LBB32-G170	
4	WIRE CABLE FOR EIP 250MM 30V 1 40PIN 0.5T/A/V CONN.VR3H0-22D NP50DB	6-43-NP501-012-1N	
4	WIRE CABLE FOR EIP 250MM 30V 1 40PIN 0.5T/A/V CONN.VR3C0-22D NP50MP	6-43-NP5H1-010-1N	
5	SCREW M2.5*2.5L KI BK/Z ICT NY(Ø8,T=0.6)	6-35-B6125-2R5	
6	FRONT BEZEL MODULE NP50DB	6-42-NP501-103	
7	WIRE+FFC CABLE FOR CCD 500MM 3.3V 12P (HT) NP50DB	6-43-NP50T-011-1	
8	WC CMERA SENSOR FOR(RGB CFA)(2200(H)X1920 (V) H.O.V=96C 60HZ) OMNIVISION (V6139 V.WAVE+LED	6-88-N15ZC-5102	OPTION
8	WC CMERA SENSOR FOR(RGB IR)(FHD 1080P(H)X 960 (V) H.O.V=95C 30HZ) FOXXX V.WAVE+LED V.O.V=3C(MONO) SENSOR V.O.V=1C	6-88-N15ZC-4900	OPTION
9	SCREW M2.5*5L KI NI ICT NY	6-35-B1125-5RA	
10	HINGE L MODULE NP55DE	6-33-NP551-L02	
11	LCD BACK SPONGE 10WN (30*0*0.2) (DS-1H(CR4382+FM2822R) NH55EDQ	6-47-0019A-C02-1	FOR 6-50-LBB26-A142 6-50-LBB26-L126
12	LCD LALA SPONG (25*0*0.75T) FM2822R2C+CR4832 NH58EDQ	6-47-0019A-35R-1	FOR 6-50-LBB32-G170
13	LCD RUBBER (8*2.5*1.45T) SLICON BLACK NH58EDQ	6-47-NH581-041	
14	BACK COVER MODULE NP55DE	6-39-NP551-021	
15	ANTENNA PEEK WLAN WGI W.2 PCB BLOAPLASTICO 24G/5G/6GHZ W.2-30MM NP50DB	6-23-7NP50-020	
16	ANTENNA PEEK WLAN WGI W.1 PCB BLOAPLASTICO FOIL 24G/5G/6GHZ W.1-30MM NP50DB	6-23-7NP50-011	
17	HINGE-R MODULE NP55HP	6-33-NP551-HR0	
18	TOP CASE MYLAR FR83 25*7*0.05 P180HM	6-40-P1802-030	
19	LCD RUBBER (8*2.5*1.3T) SLICON GARY NH58EDQ	6-47-NH581-070	FOR 6-50-LBB32-G170

ITEM	PART NAME	PART NO.	Q'TY /SET	MATERIAL (SPEC.)	REMARK

MATERIAL (SPEC.)
FINISH

SELECT V. DIM	1	2	3	4	EXTRA
~8	0.03	0.05	0.10	0.20	
8~25	0.05	0.08	0.20	0.30	
25~80	0.08	0.12	0.30	0.40	
80~250	0.12	0.20	0.40	0.50	
250~	0.20	0.30	0.50	0.60	

QUANTITY /SET 1PC.
DRAWN 4/20/2021 INI
DESIGNED 4/20/2021 INI
CHECKED
APPROVED

CLEVO CO.
DESCRIPTION LCD 15.6" PANEL ASS'Y 爆炸圖(一)
SCALE 1/1
UNIT M/M
DRAWING NO. 99-NP55HP-010
FILENAME NP55HP-LCD
MODEL NO. NP55HP

Appendix B: Schematic Diagrams

This appendix has circuit diagrams of the ***NP50HP / NP55HP-HM*** notebook's PCB's. The following table indicates where to find the appropriate schematic diagram.

Diagram - Page	Diagram - Page	Diagram - Page
System Block Diagram - Page B - 2	*Straps and XTAL - Page B - 26*	*LED, CCD, TPM, Power SW Bd. - Page B - 50*
Processor 1/6 - Page B - 3	*NVIDIA Power Sequence - Page B - 27*	*KBC-ITE IT5570 - Page B - 51*
Processor 2/6 - Page B - 4	*OVR-M - Page B - 28*	*RGB KB - Page B - 52*
Processor 3/6 - Page B - 5	*mDP - Page B - 29*	*5V, 5VS, 3.3V, 3.3VS - Page B - 53*
Processor 4/6 - Page B - 6	*Panel, Inverter - Page B - 30*	*VCCST, VCCSTG, VCCSFR - Page B - 54*
Processor 5/6 - Page B - 7	*HDMI - Page B - 31*	*VDD3, VDD5 - Page B - 55*
Processor 6/6 - Page B - 8	*PCH 1/8 - Page B - 32*	*DDR 1.2V / 0.6VS, 2.5V - Page B - 56*
DDR4 CHA SO-DIMM_0 - Page B - 9	*PCH 2/8 - Page B - 33*	*VCCIN - Page B - 57*
DDR4 CHB SO-DIMM_0 - Page B - 10	*PCH 3/8 - Page B - 34*	*VCCIN Output - Page B - 58*
VGA PCI-E Interface - Page B - 11	*PCH 4/8 - Page B - 35*	*VNN / V1.05A - Page B - 59*
Frame Buffer Partition A/B - Page B - 12	*PCH 5/8 - Page B - 36*	*VCCIN AUX - Page B - 60*
Frame Buffer A - Page B - 13	*PCH 6/8 - Page B - 37*	*Charger - Page B - 61*
Frame Buffer A - Page B - 14	*PCH 7/8 - Page B - 38*	*NVVDD1 - Page B - 62*
Frame Buffer B - Page B - 15	*PCH 8/8 - Page B - 39*	*NVVDD2 - Page B - 63*
Frame Buffer B - Page B - 16	*Retimer 1/2 - Page B - 40*	*PEX_VDD - Page B - 64*
Frame Buffer Partition - Page B - 17	*Retimer 2/2 - Page B - 41*	*FBVDDQ - Page B - 65*
Frame Buffer C - Page B - 18	*PD65993, Type-C - Page B - 42*	*1V8_AON, NV3V3, 3.3VA - Page B - 66*
Frame Buffer C - Page B - 19	*Audio Codec - Page B - 43*	*Audio Board + Redriver - Page B - 67*
GPU GND - Page B - 20	*M.2 WLAN+BT, PCIE 4X SSD - Page B - 44*	*LED Board - Page B - 68*
GPU NVVDD, FBVDDQ - Page B - 21	*M.2 PCIE 4X SSD - Page B - 45*	*Power SW Board - Page B - 69*
GPU Decoupling - NVVDD - Page B - 22	*Type-C & A - Page B - 46*	*Power Sequence - Page B - 70*
GPU Decoupling - FBVDDQ - Page B - 23	*LAN RTL8111H - Page B - 47*	
Misc - GPIO, I2C, ROM - Page B - 24	*Card Reader - Page B - 48*	
IFP I/O Interface - Page B - 25	*HDD, Click TP, Audio - Page B - 49*	

Table B - 1
SCHEMATIC DIAGRAMS

Version Note

The schematic diagrams in this chapter are based upon version 6-7P-NP5H4-003. If your mainboard (or other boards) are a later version, please check with the Service Center for updated diagrams (if required).

System Block Diagram

Sheet 1 of 69
System Block
Diagram

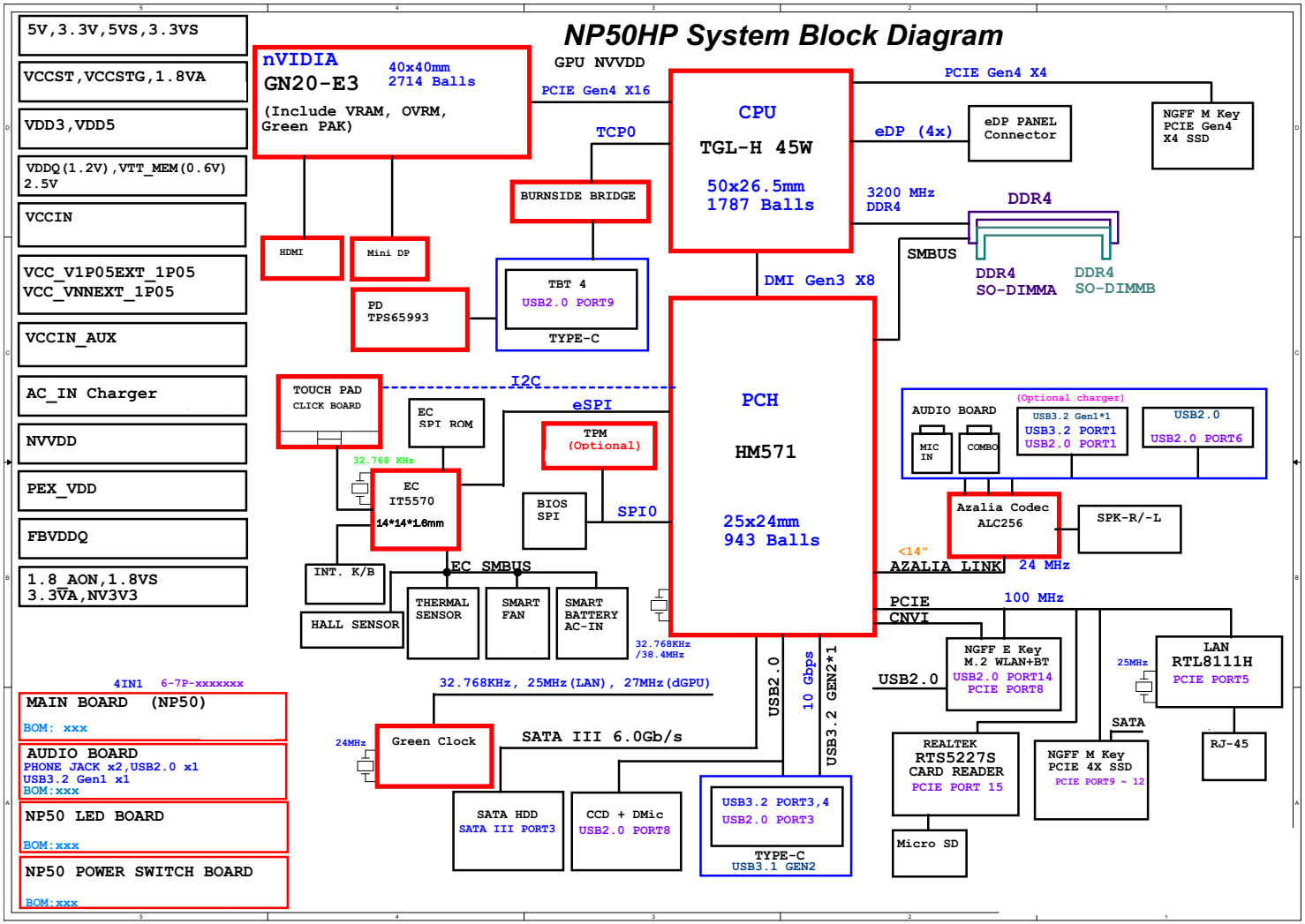

Processor 1/6

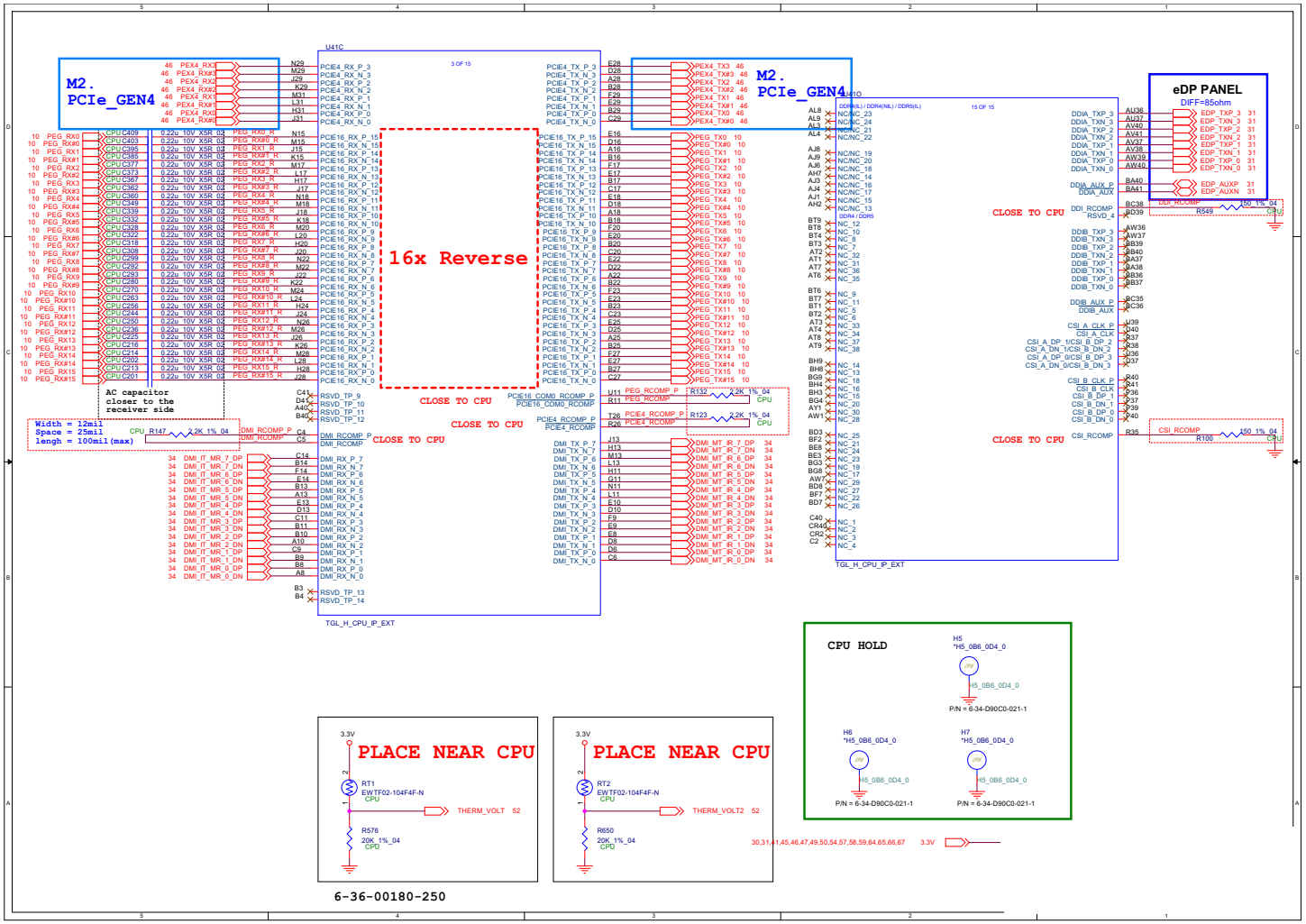

Sheet 2 of 69
Processor 1/6

Processor 2/6

Sheet 3 of 69
Processor 2/6

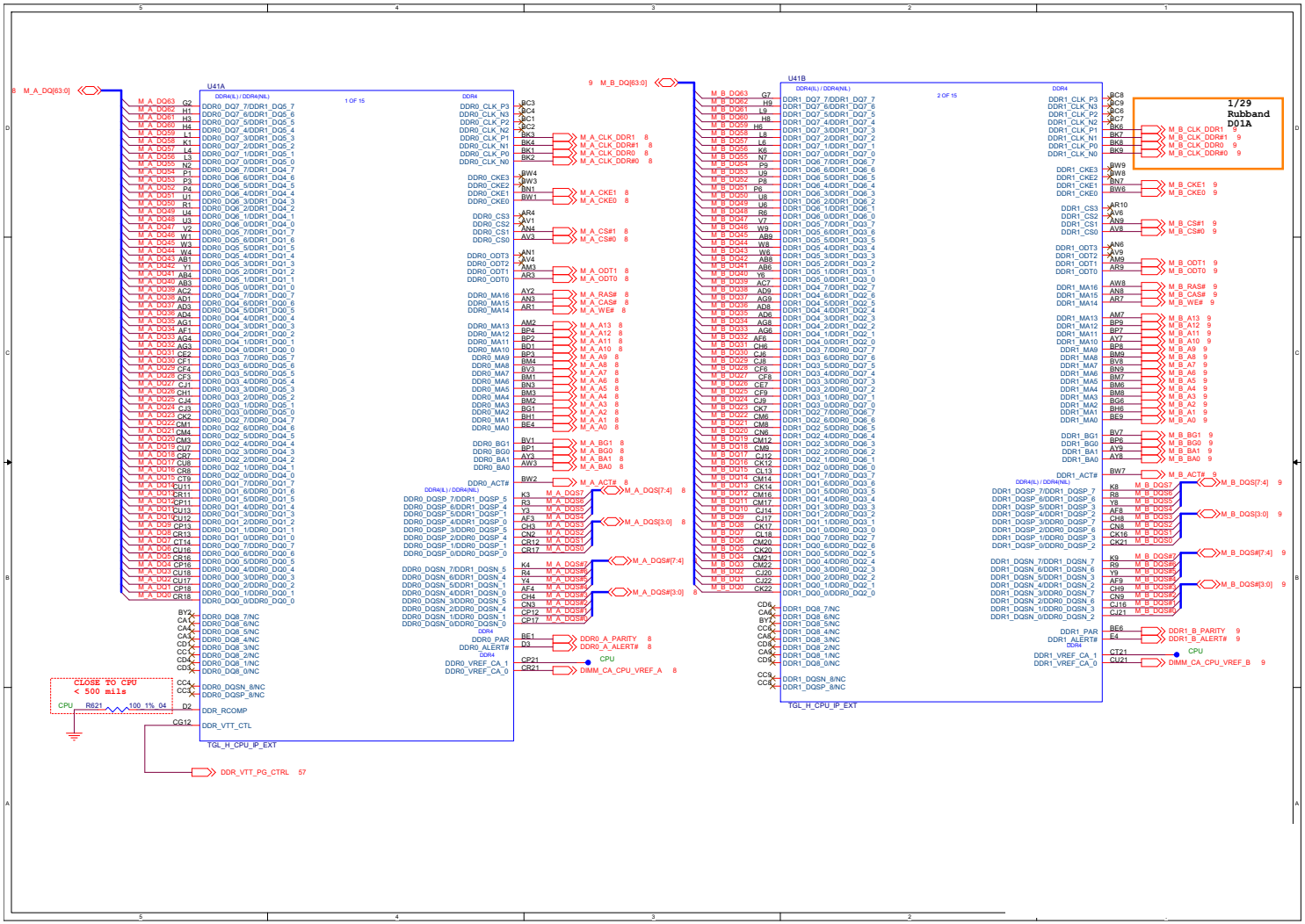

Processor 3/6

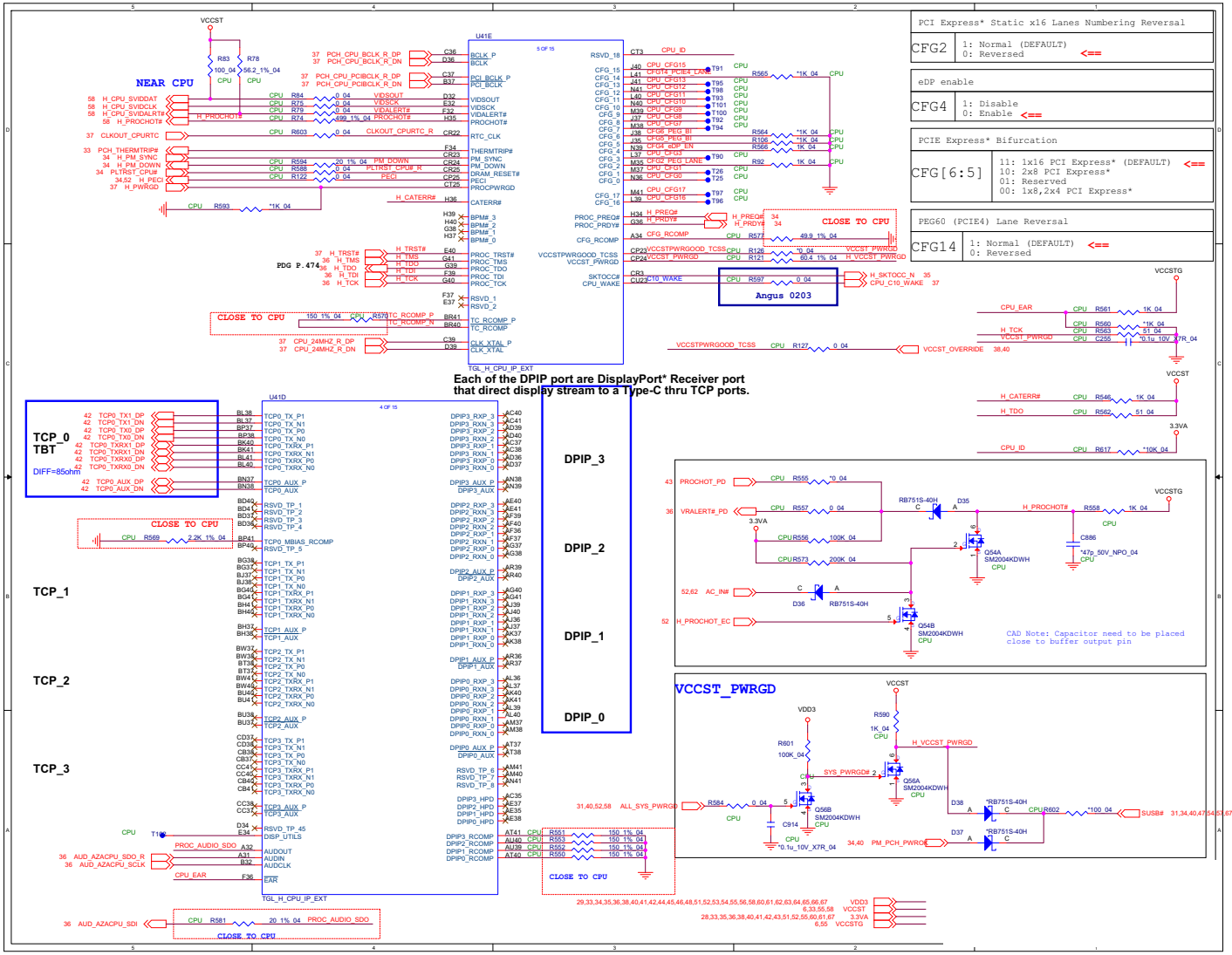

Sheet 4 of 69
Processor 3/6

Processor 4/6

Sheet 5 of 69
Processor 4/6

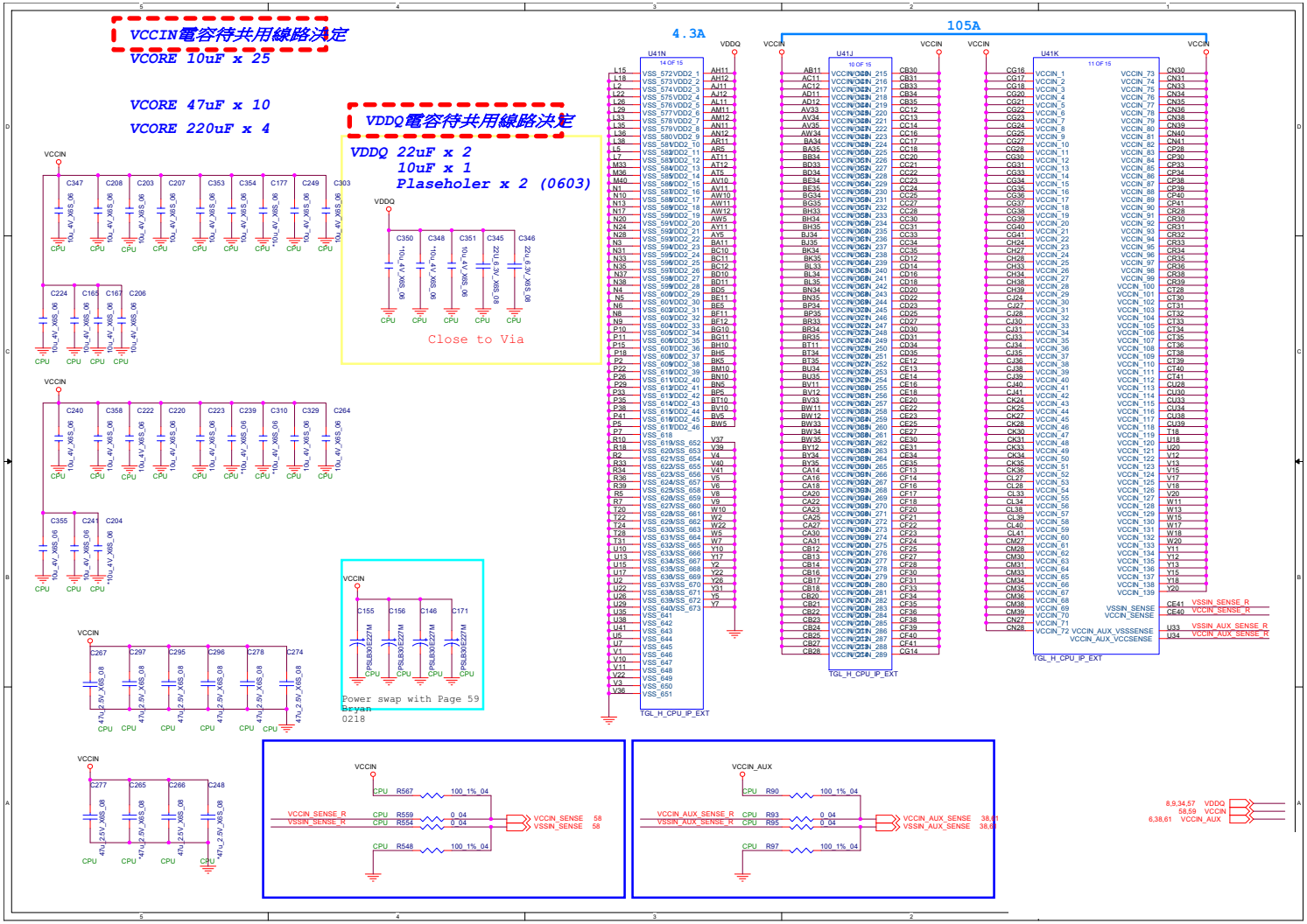

Processor 5/6

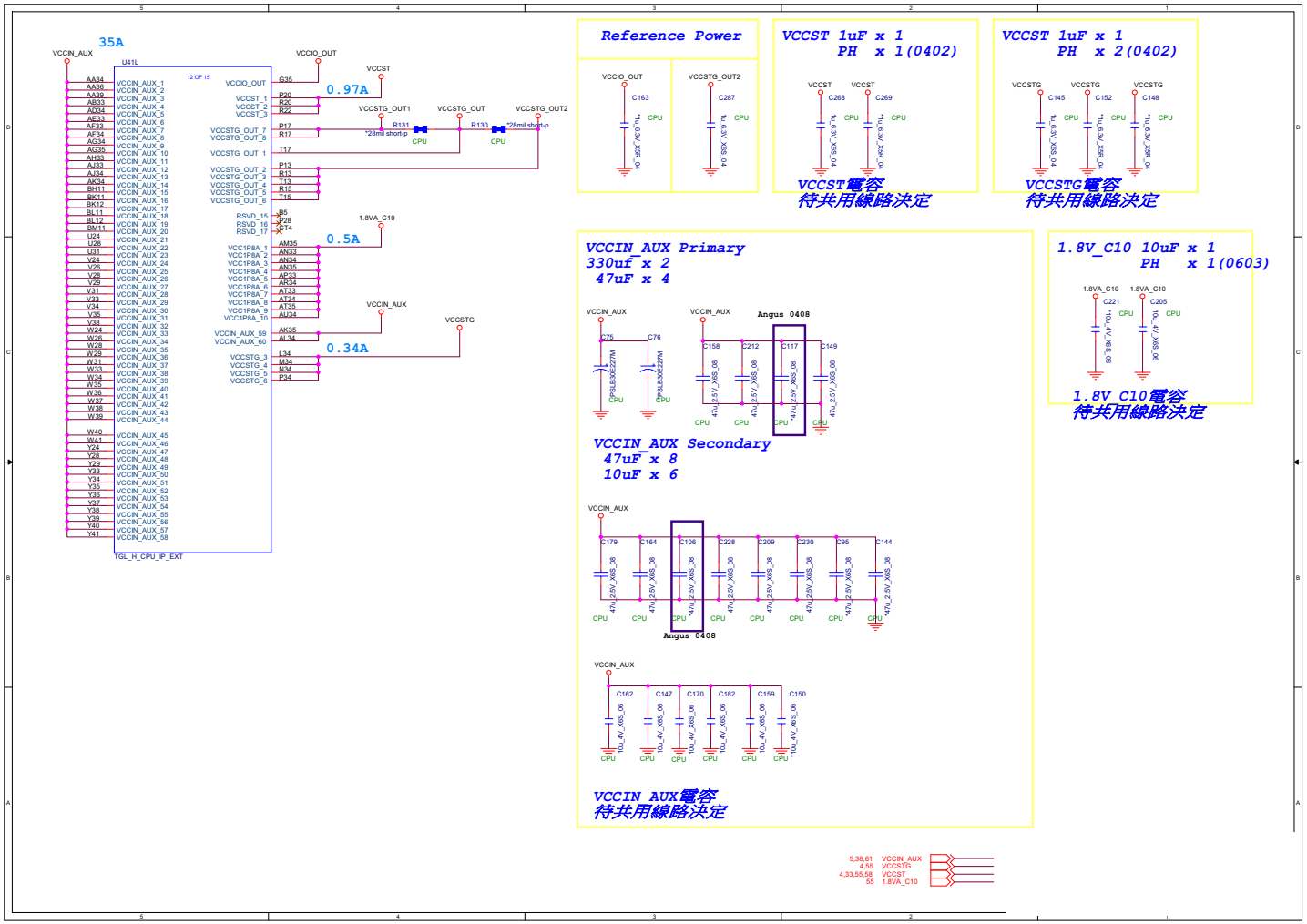

Sheet 6 of 69
Processor 5/6

B.Schematic Diagrams

Processor 6/6

Sheet 7 of 69
Processor 6/6

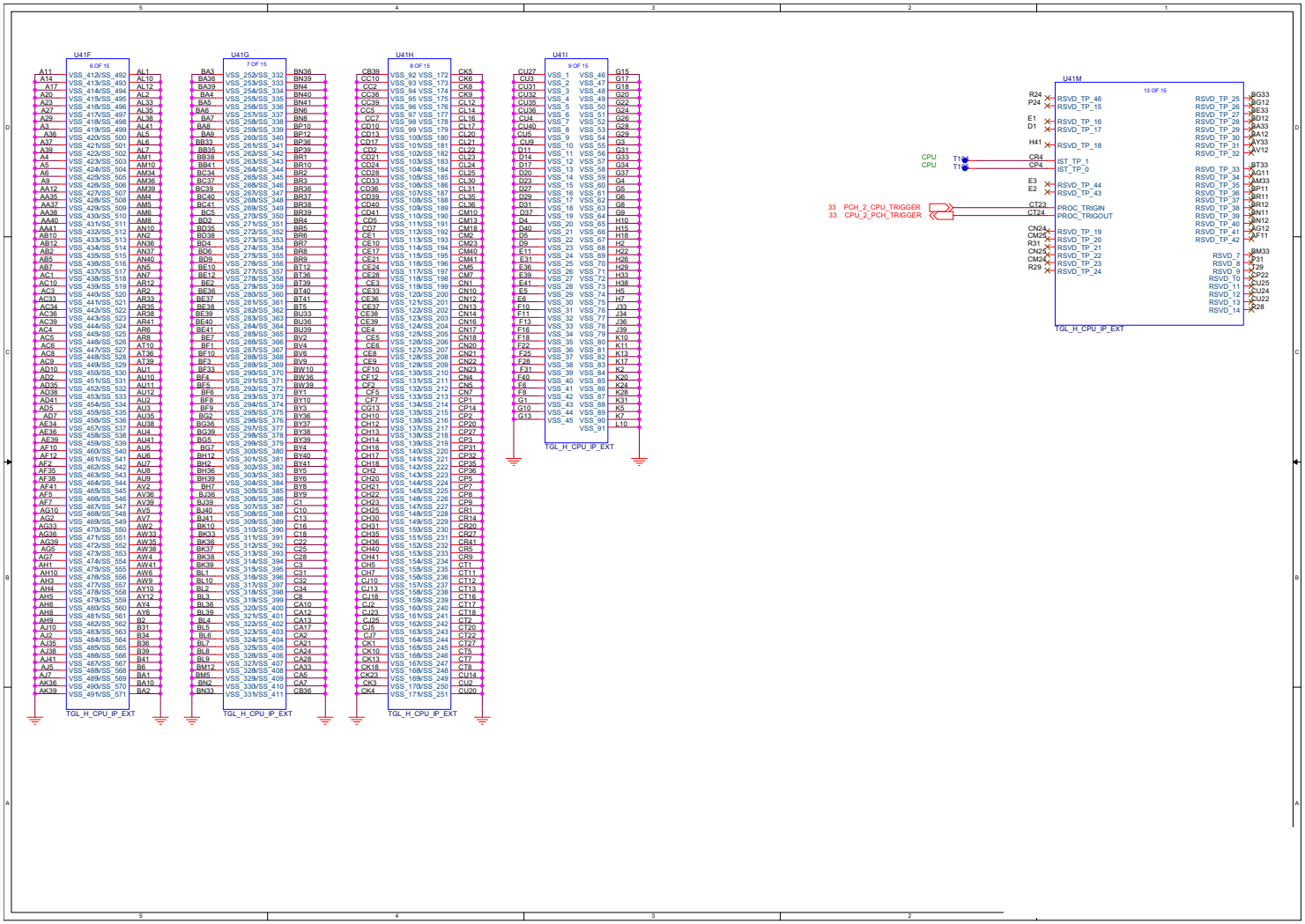

DDR4 CHA SO-DIMM_0

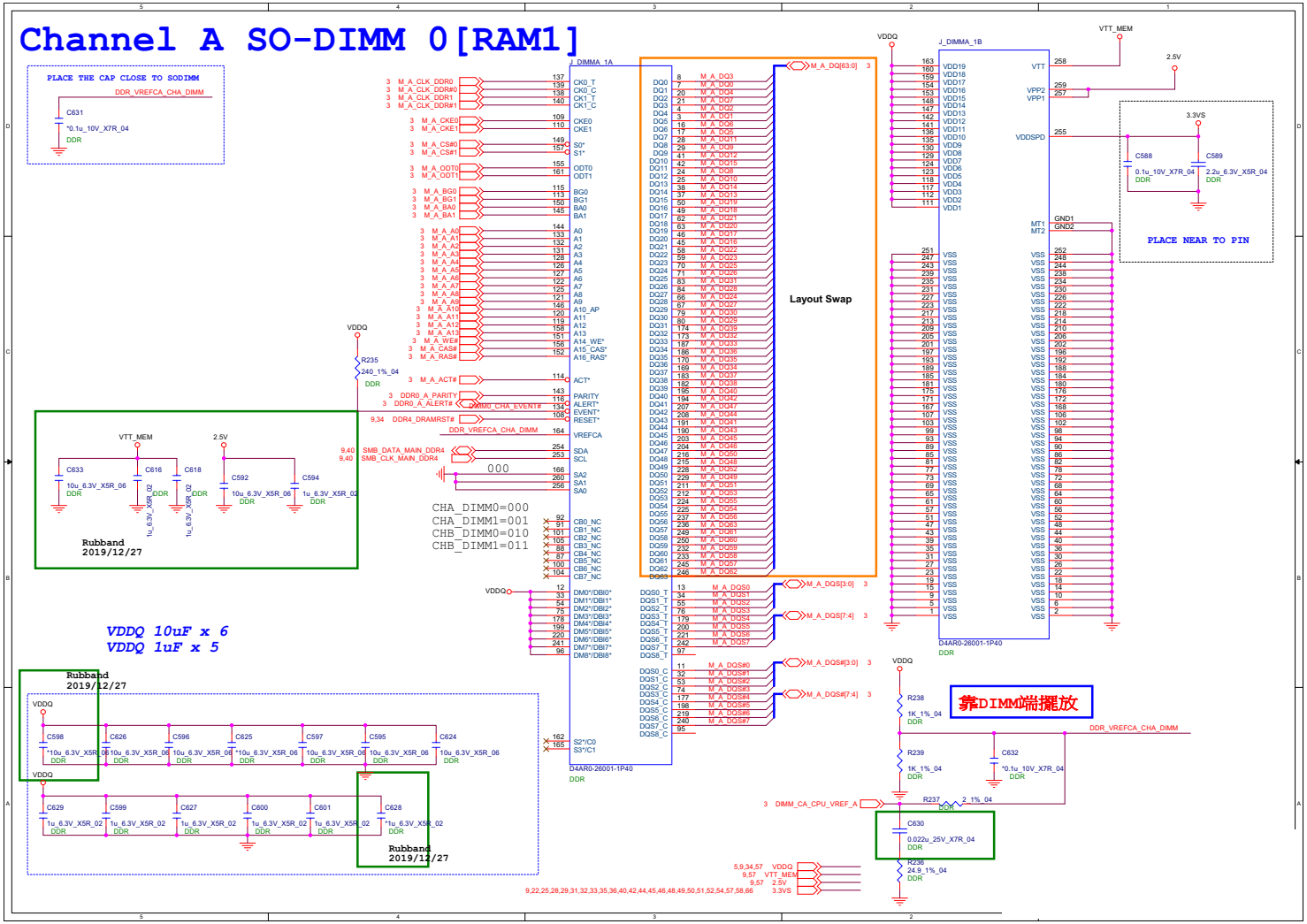

Sheet 8 of 69
DDR4 CHA SO-DIMM_0

DDR4 CHB SO-DIMM_0

Sheet 9 of 69
DDR4 CHB SO-DIMM_0

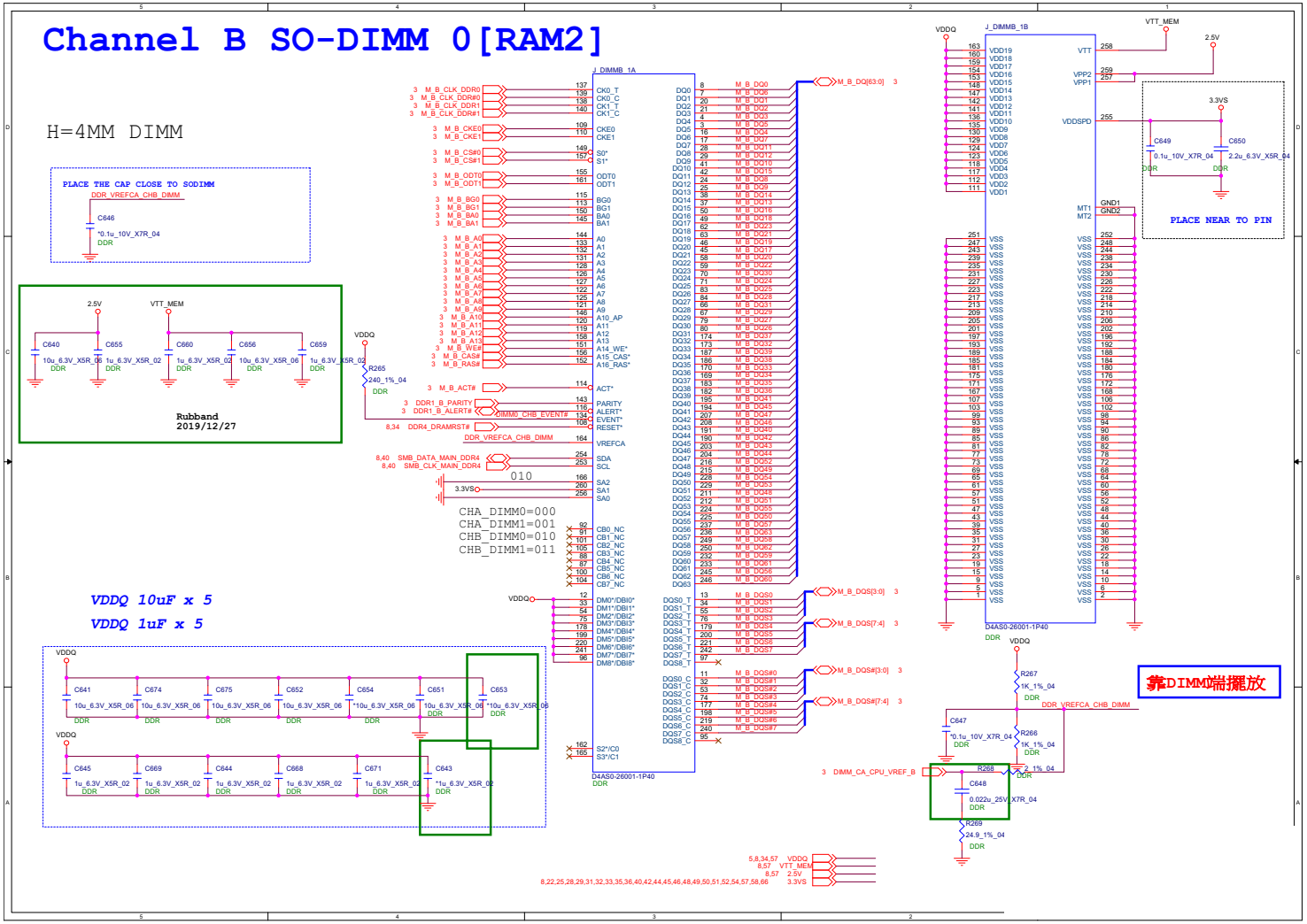

VGA PCI-E Interface

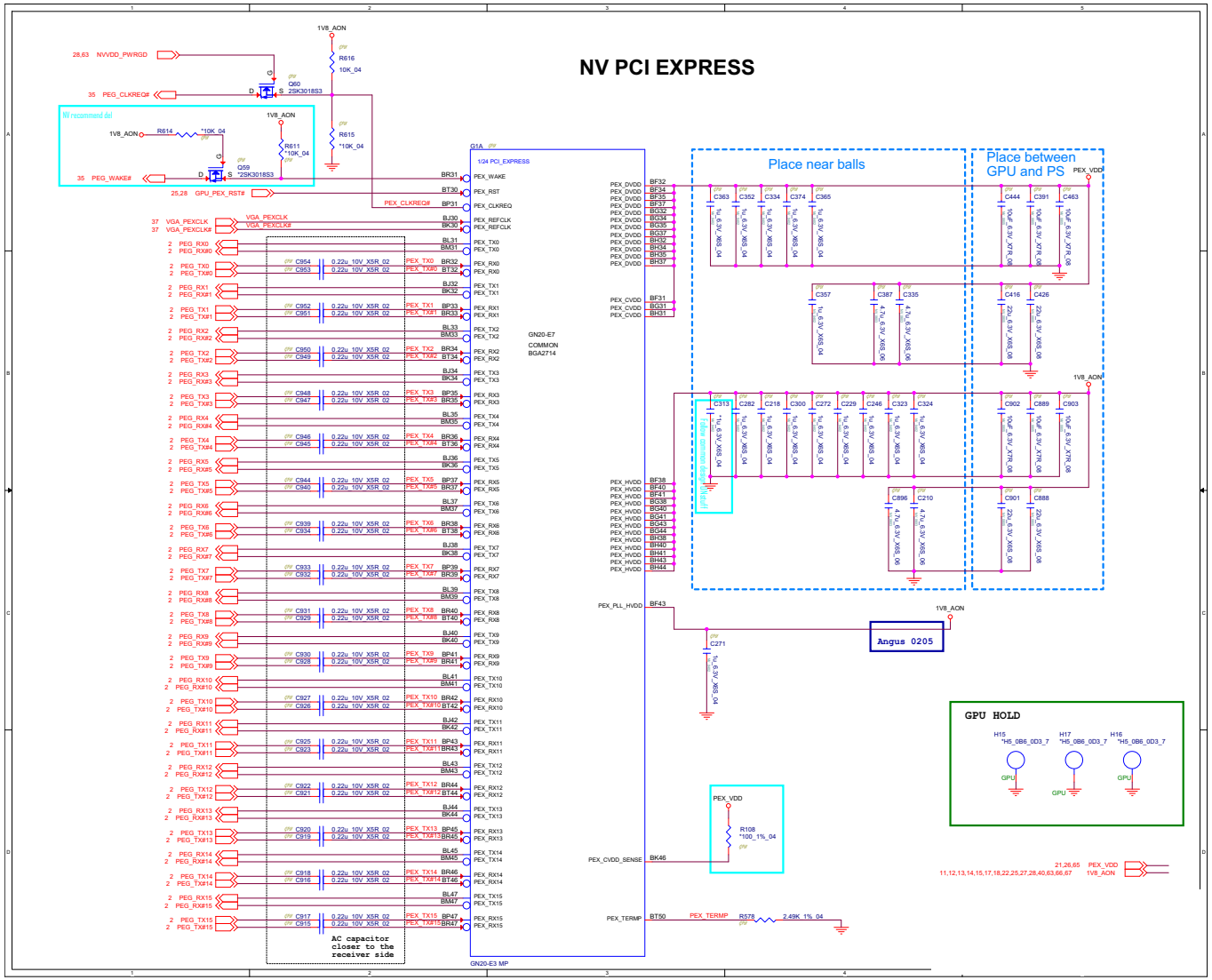

Sheet 10 of 69
VGA PCI-E Interface

Frame Buffer Partition A/B

Sheet 11 of 69
Frame Buffer Partition A/B

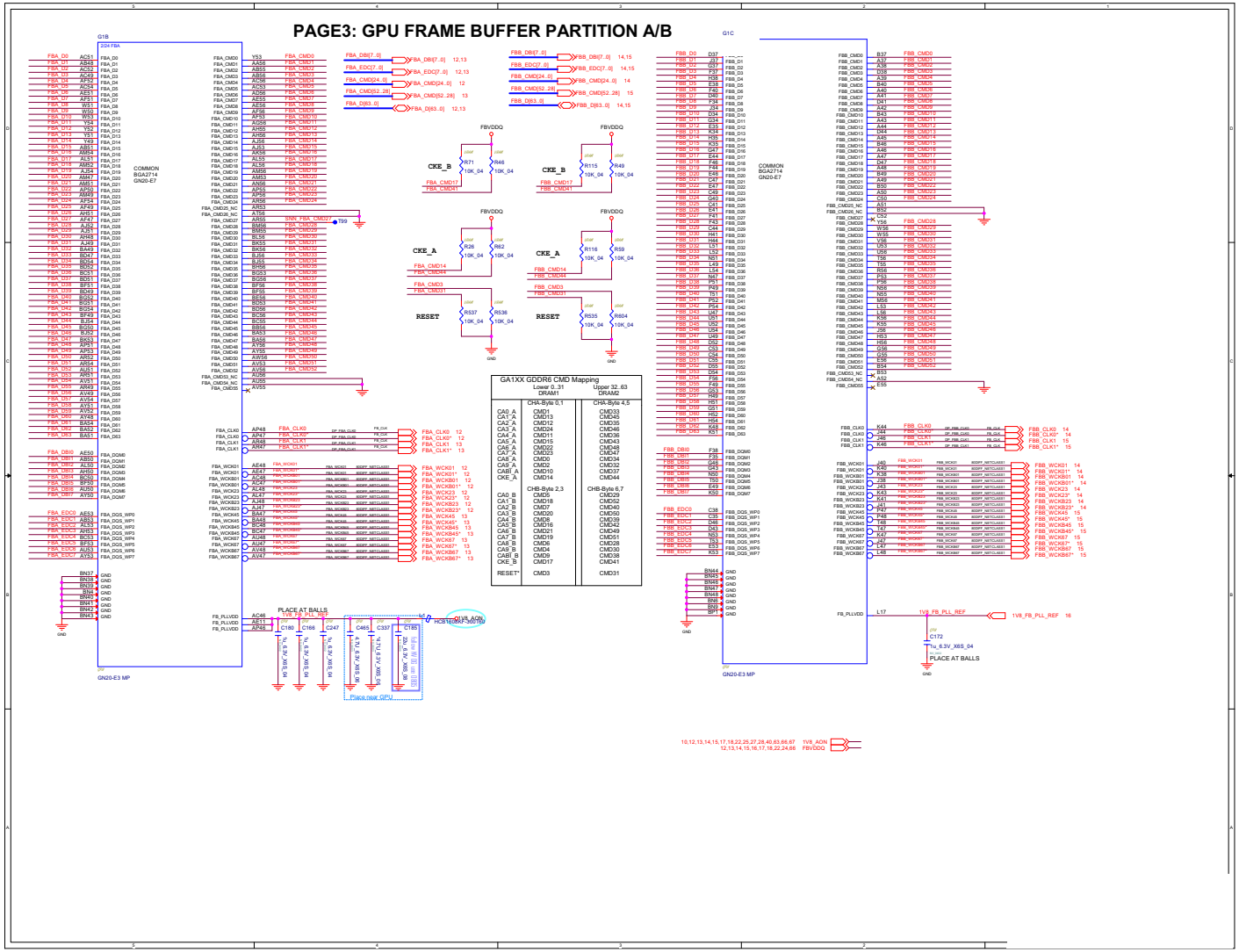

Frame Buffer A

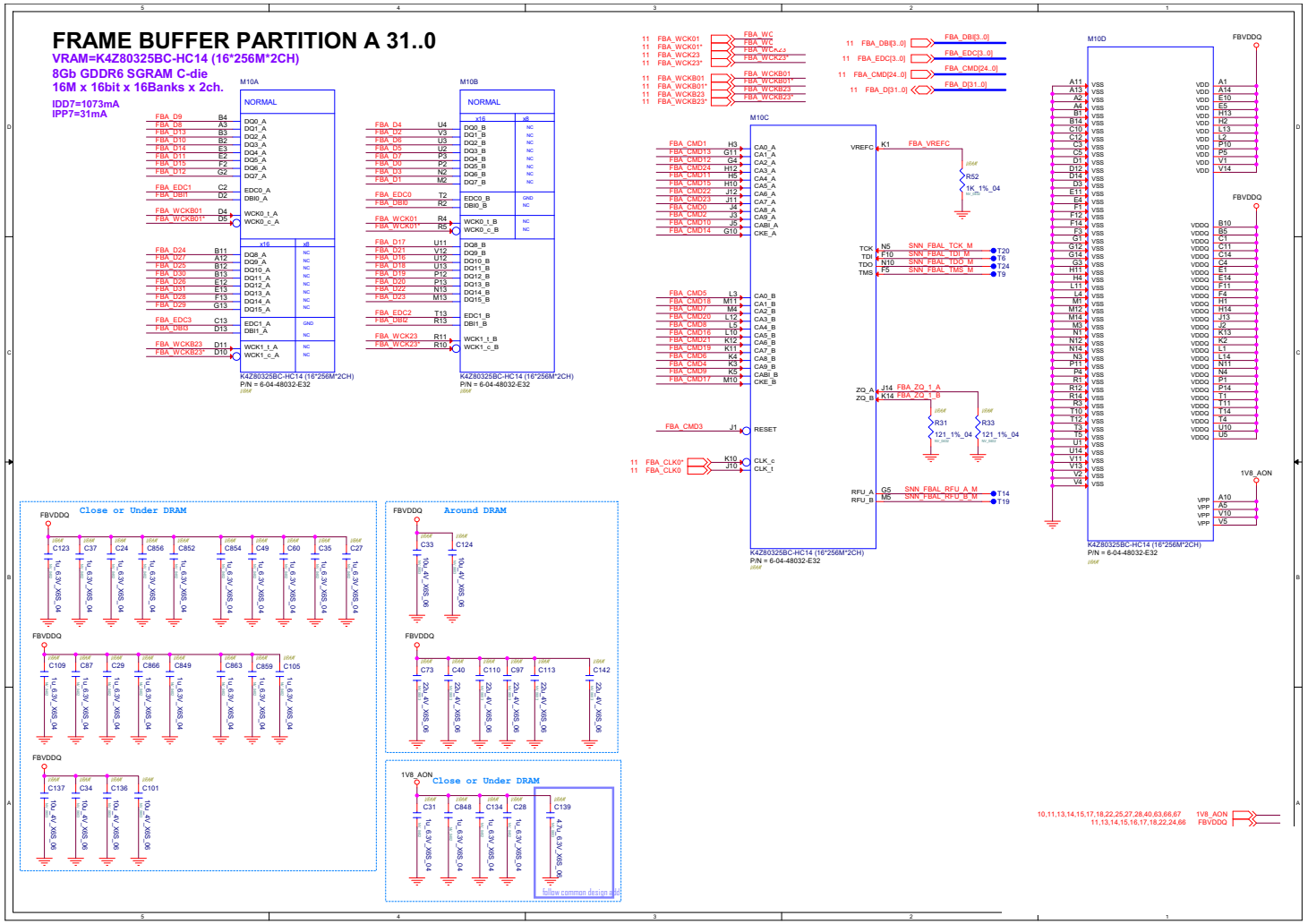

Sheet 12 of 69
Frame Buffer A

Frame Buffer A

Sheet 13 of 69
Frame Buffer A

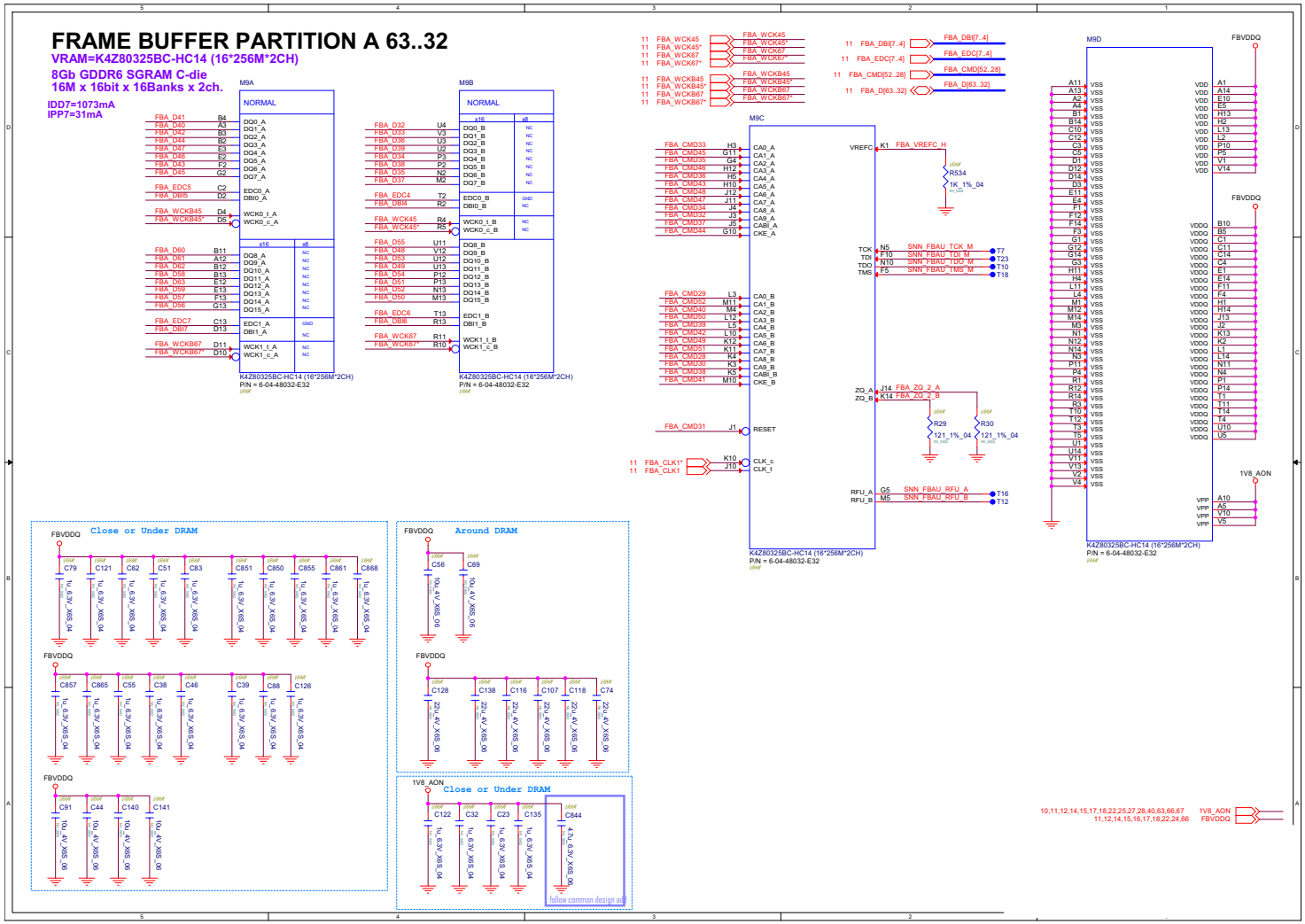

Frame Buffer B

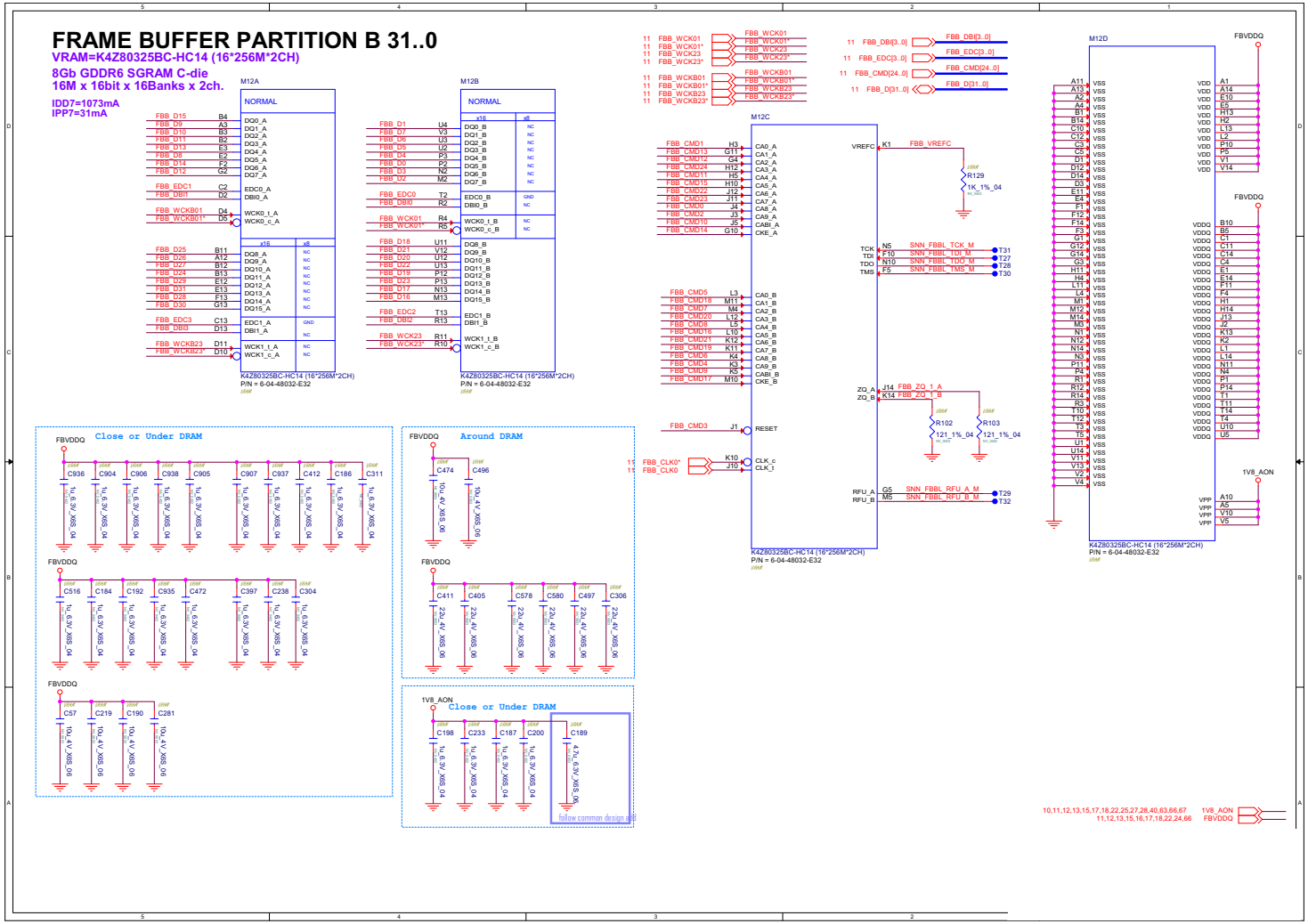

Sheet 14 of 69
Frame Buffer B

Frame Buffer B

Sheet 15 of 69
Frame Buffer B

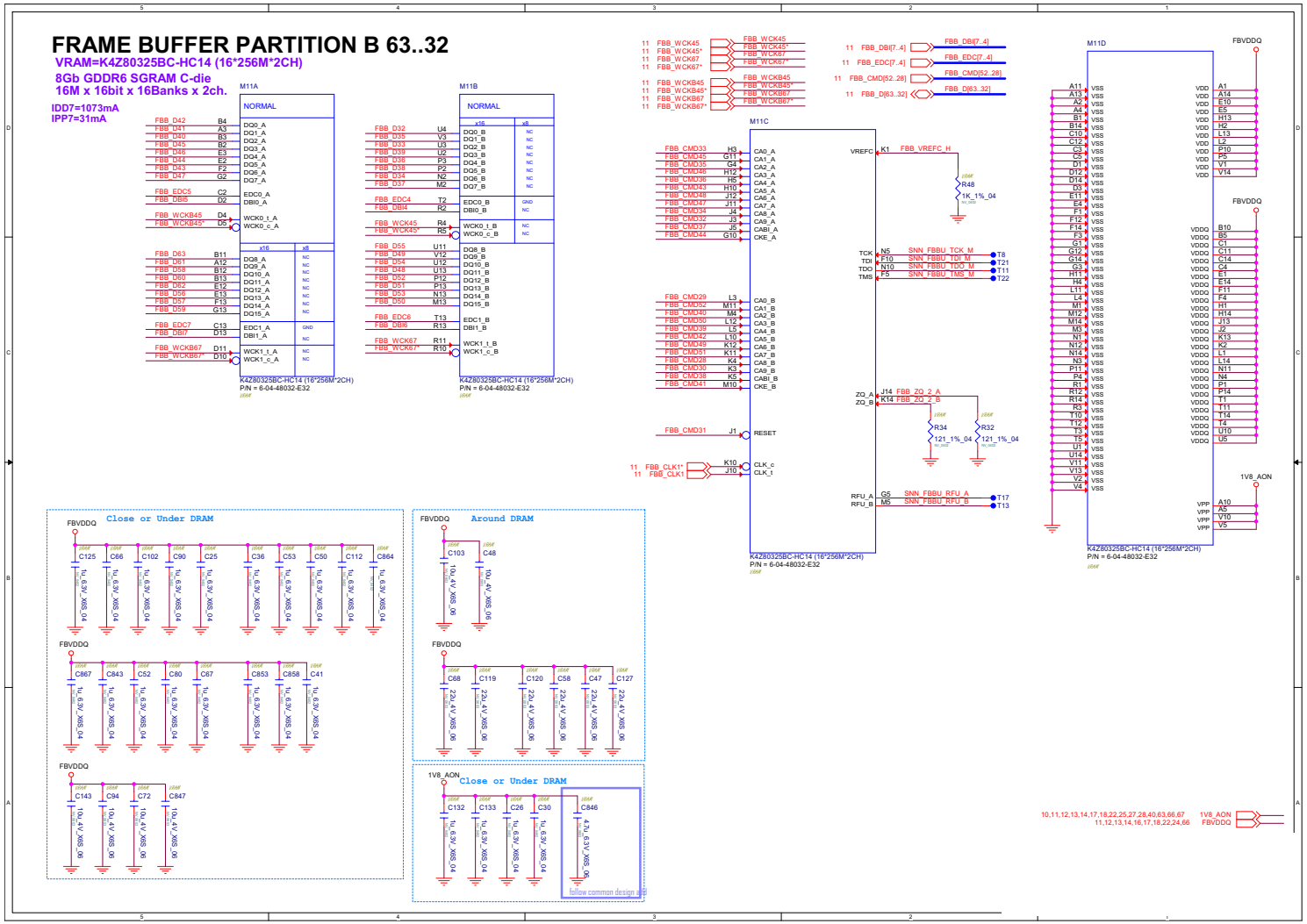

Frame Buffer Partition

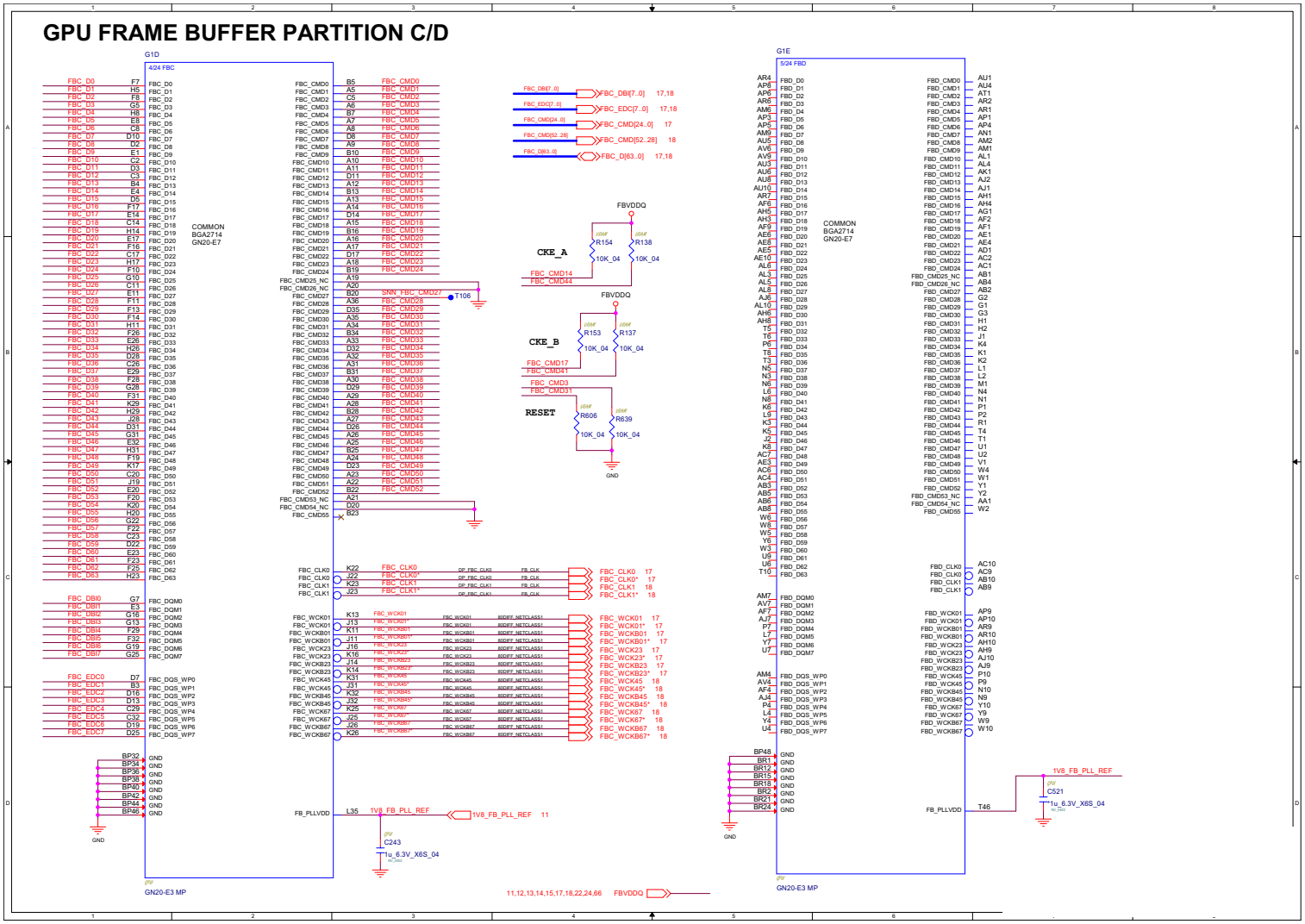

Sheet 16 of 69
Frame Buffer
Partition

Frame Buffer C

Sheet 17 of 69
Frame Buffer C

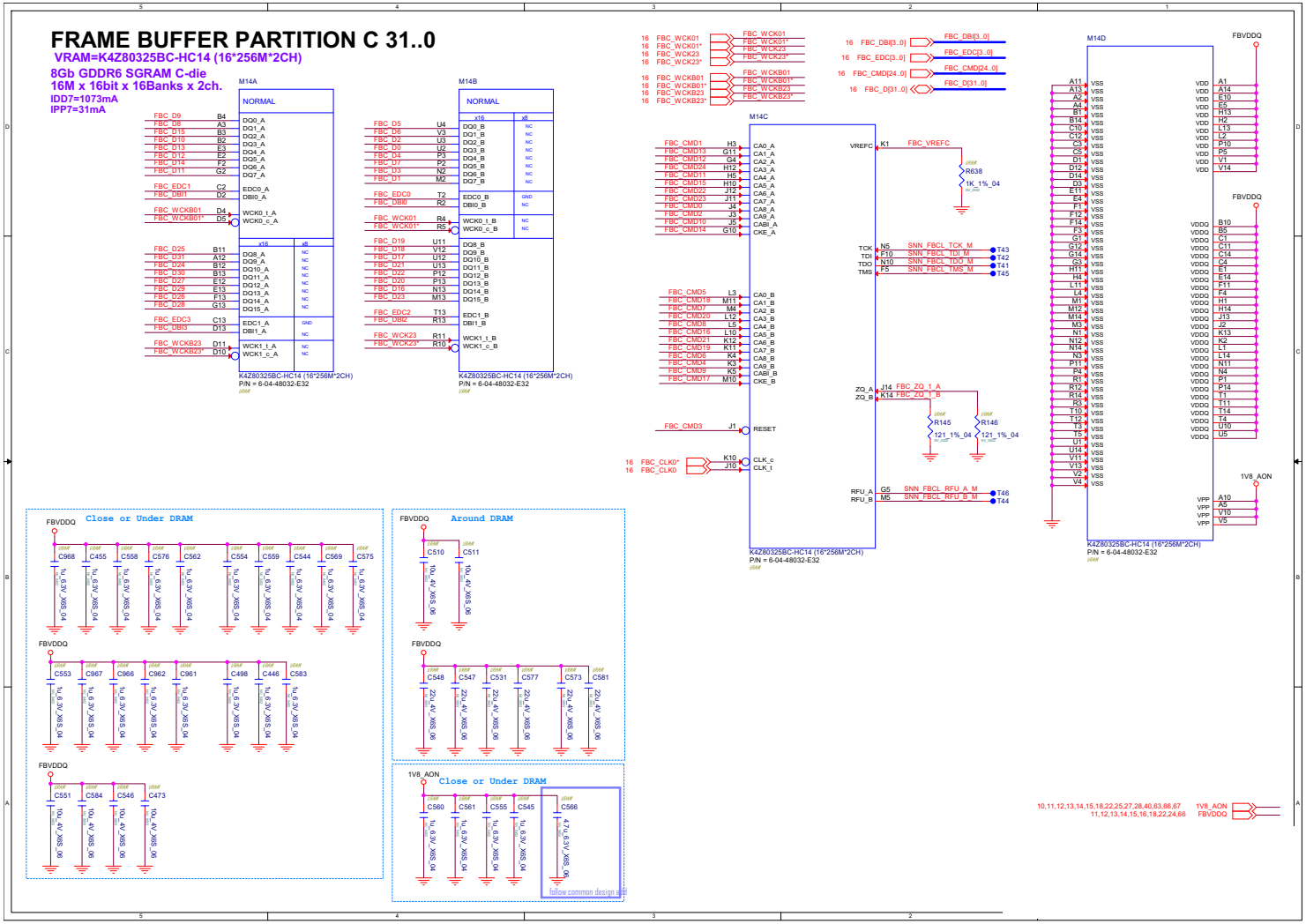

Frame Buffer C

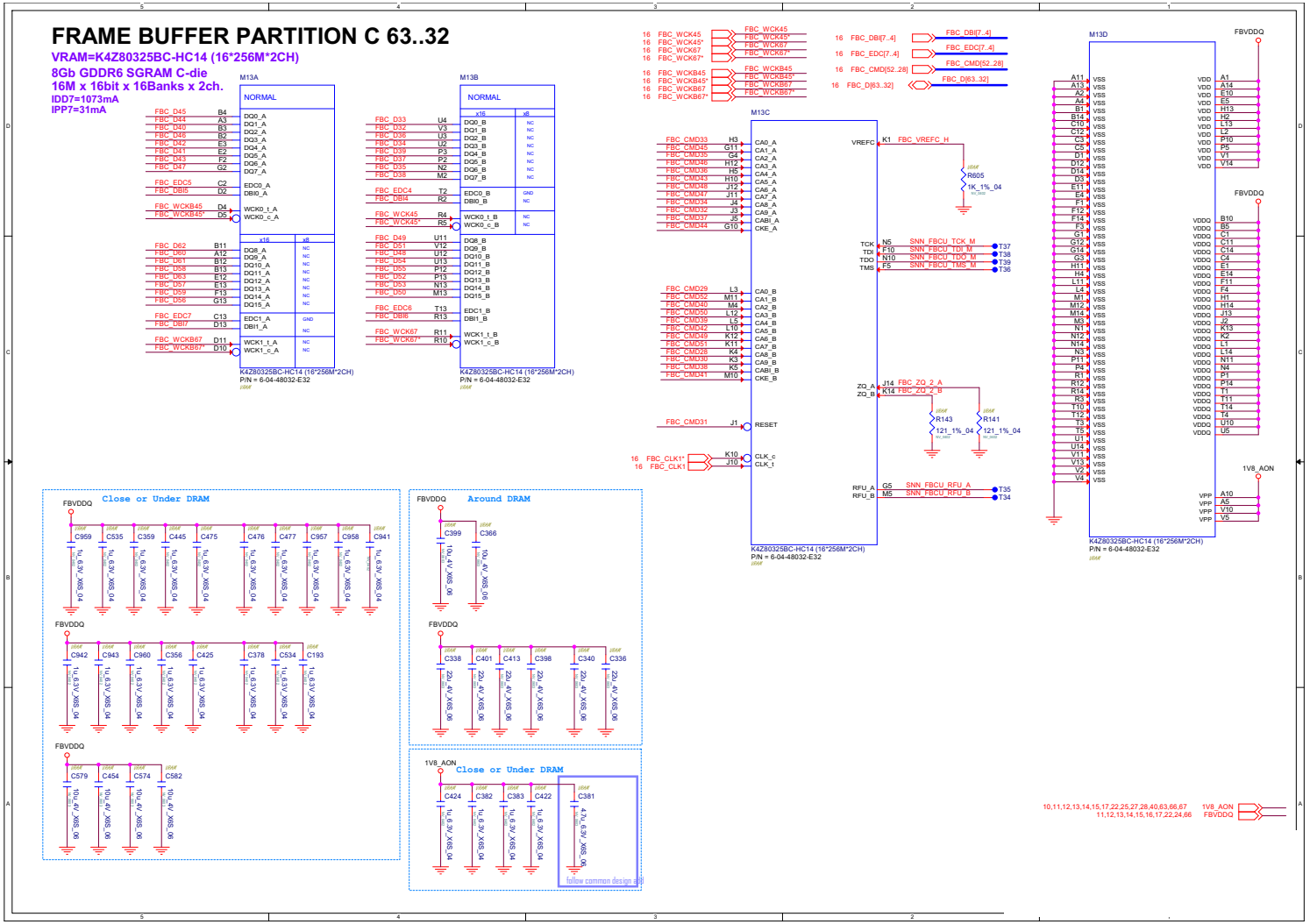

Sheet 18 of 69
Frame Buffer C

GPU GND

Sheet 19 of 69
GPU GND

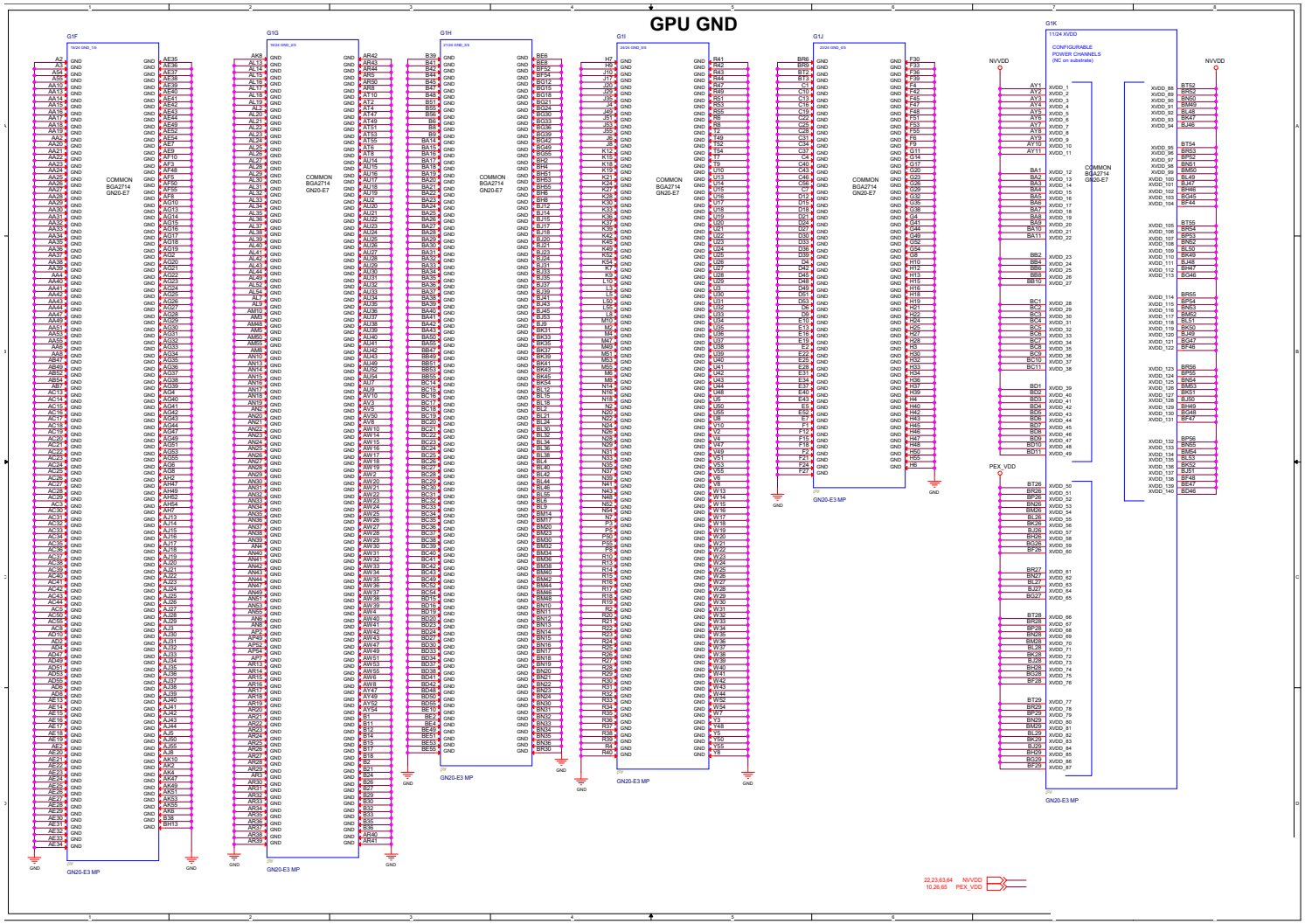

GPU NVVDD, FBVDDQ

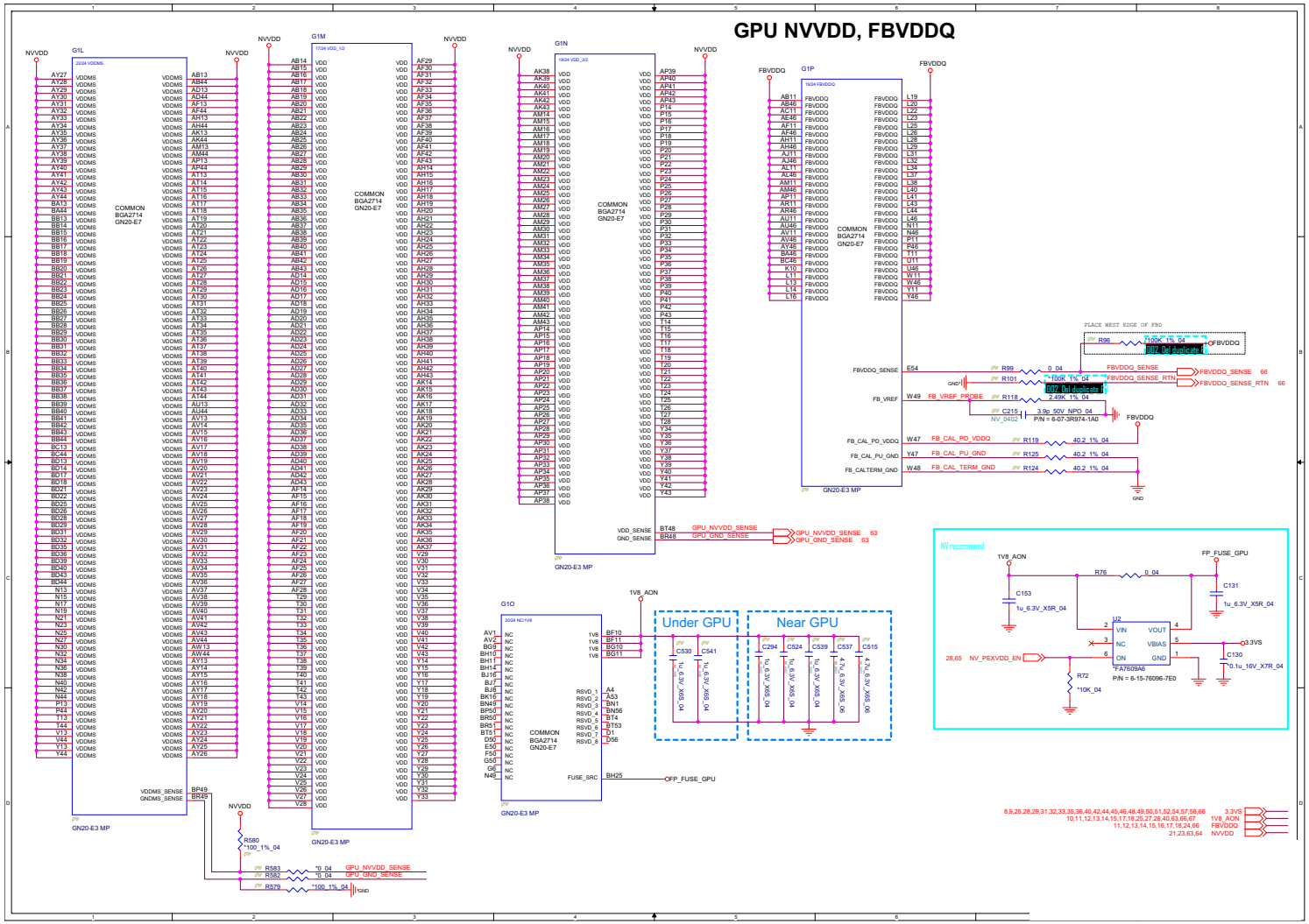

Sheet 20 of 69
GPU NVVDD, FBVDDQ

B.Schematic Diagrams

GPU Decoupling - NVVDD

Sheet 21 of 69
GPU Decoupling - NVVDD

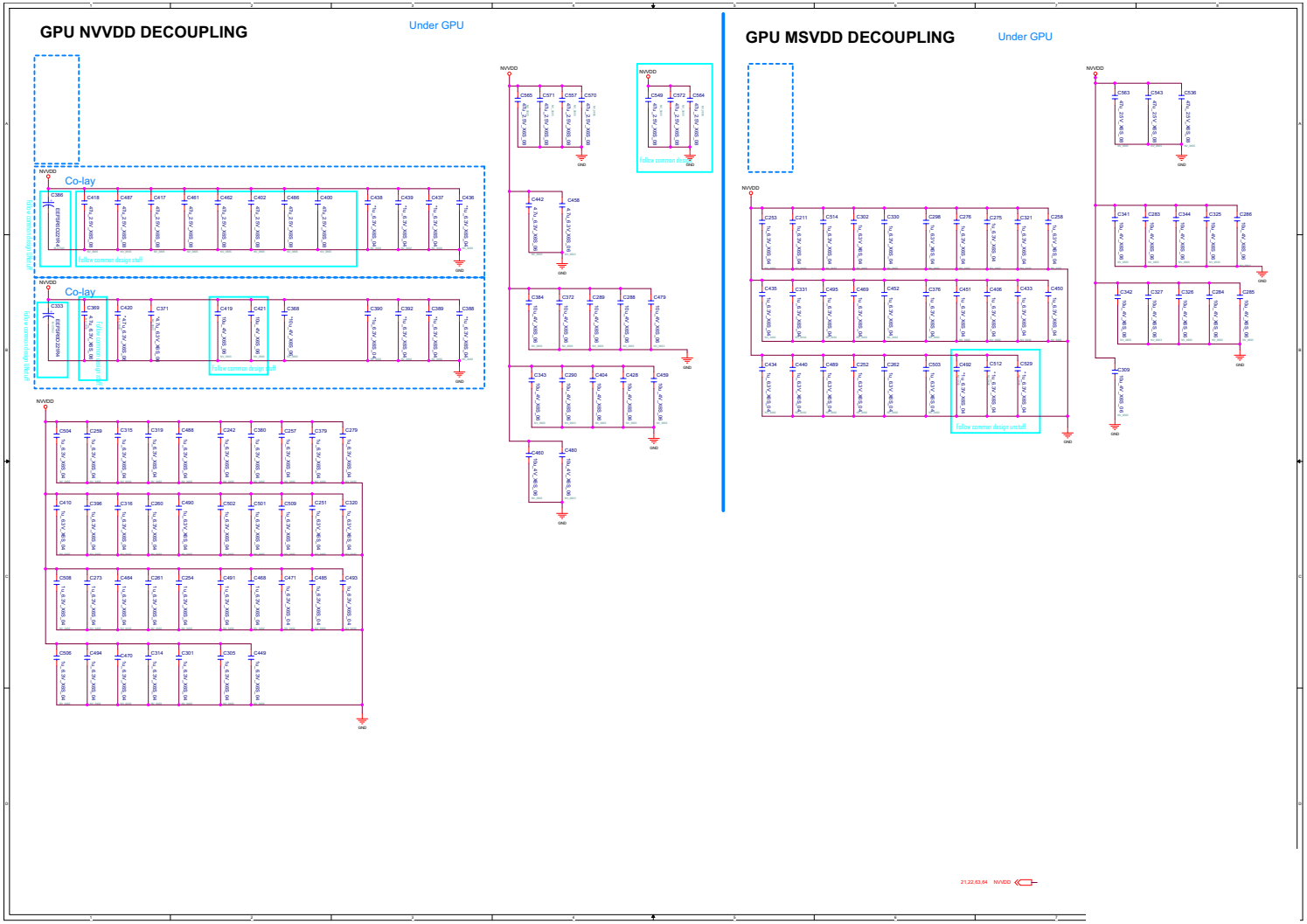

GPU Decoupling - FBVDDQ

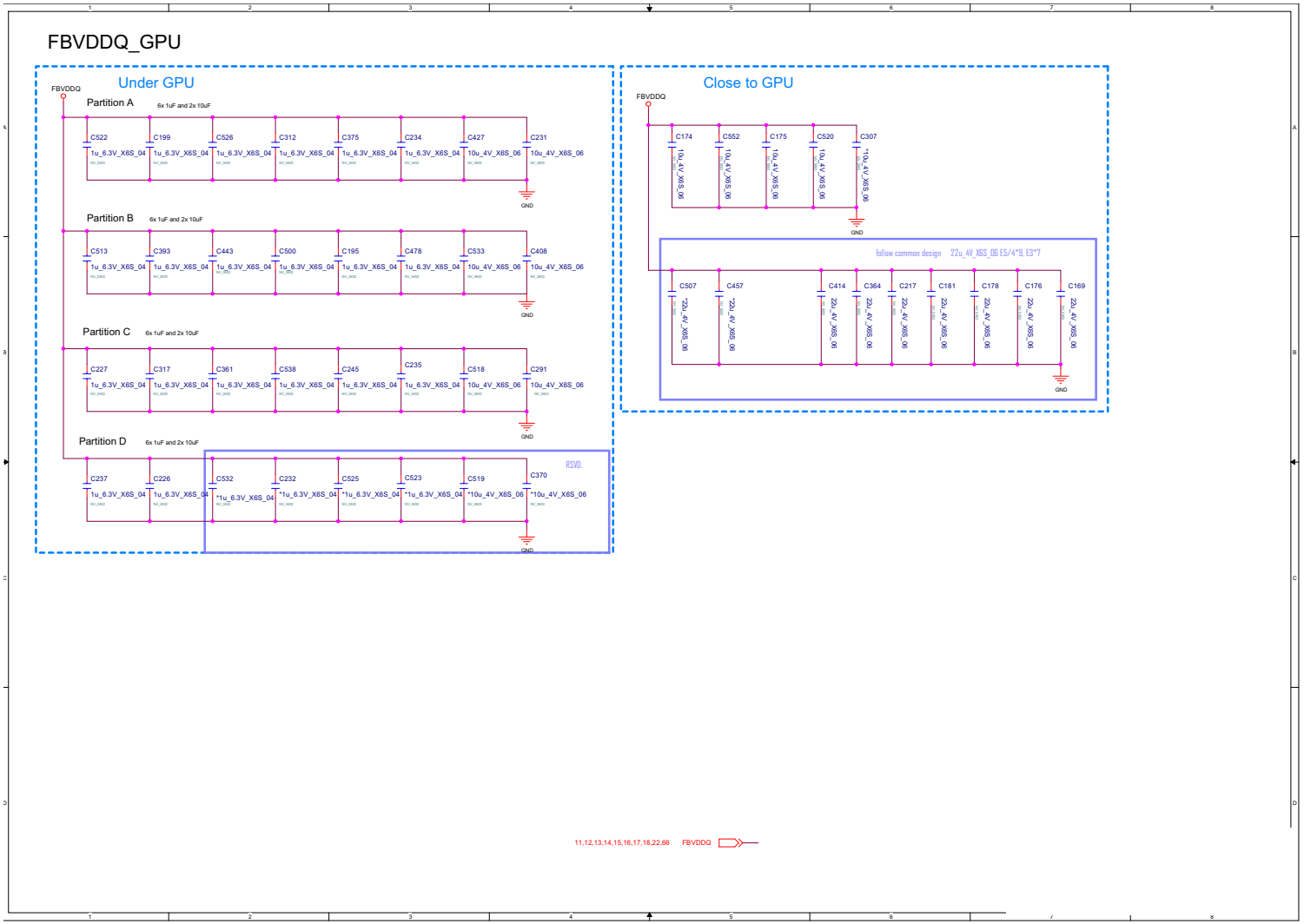

Sheet 22 of 69
GPU Decoupling - FBVDDQ

Misc - GPIO, I2C, ROM

Sheet 23 of 69
Misc - GPIO, I2C, ROM

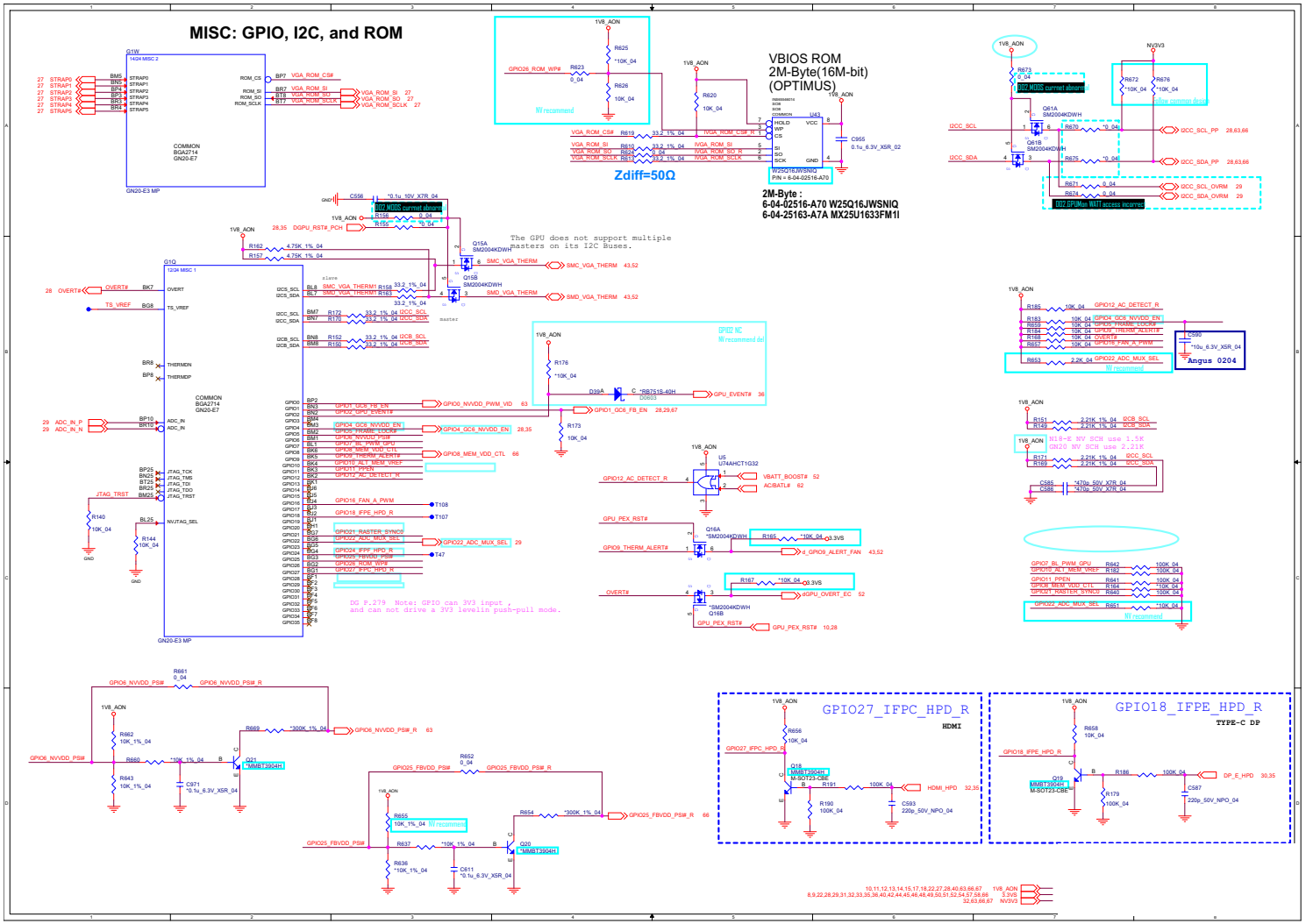

IFP I/O Interface

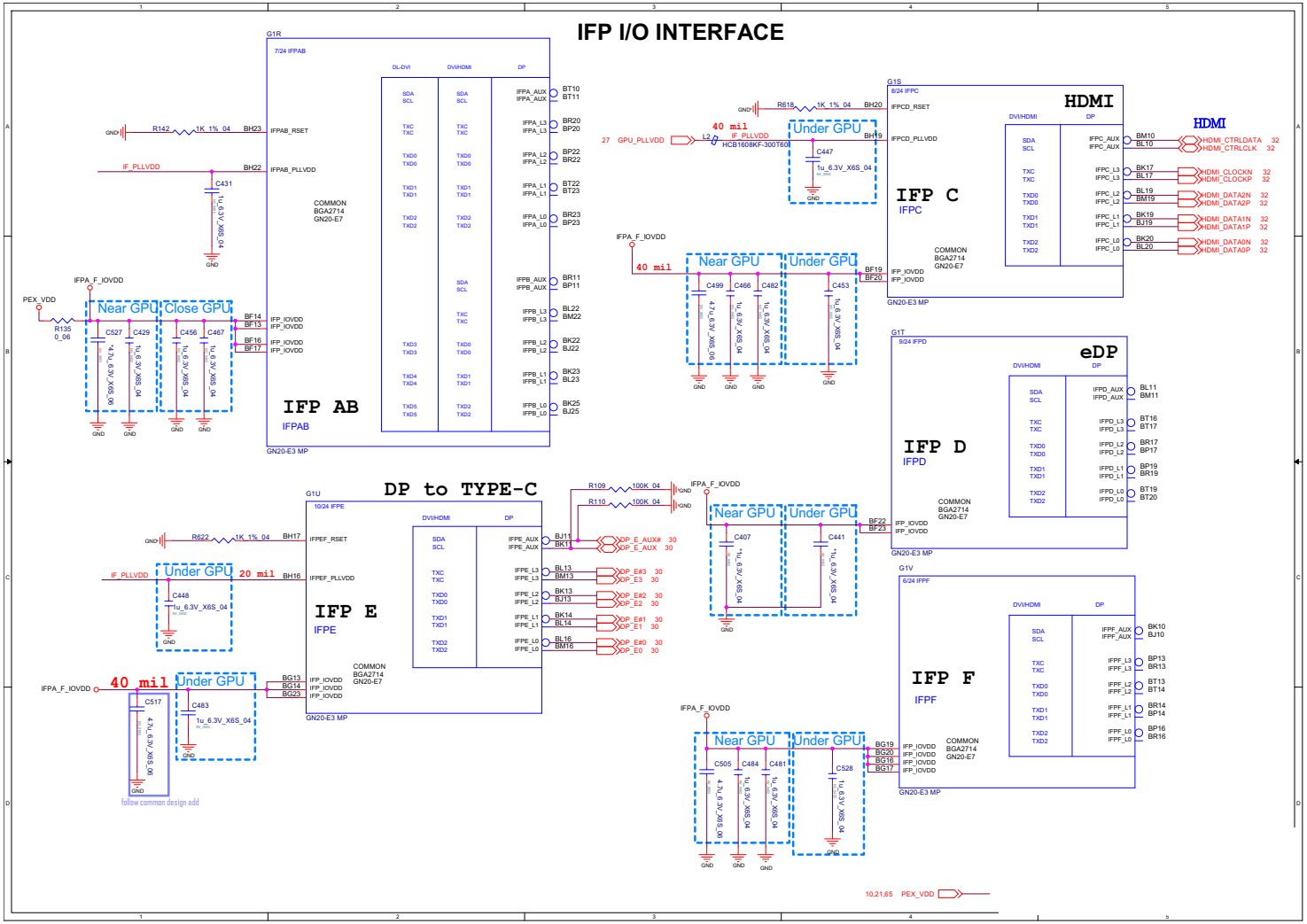

Sheet 24 of 69
IFP I/O Interface

Straps and XTAL

Sheet 25 of 69
Straps and XTAL

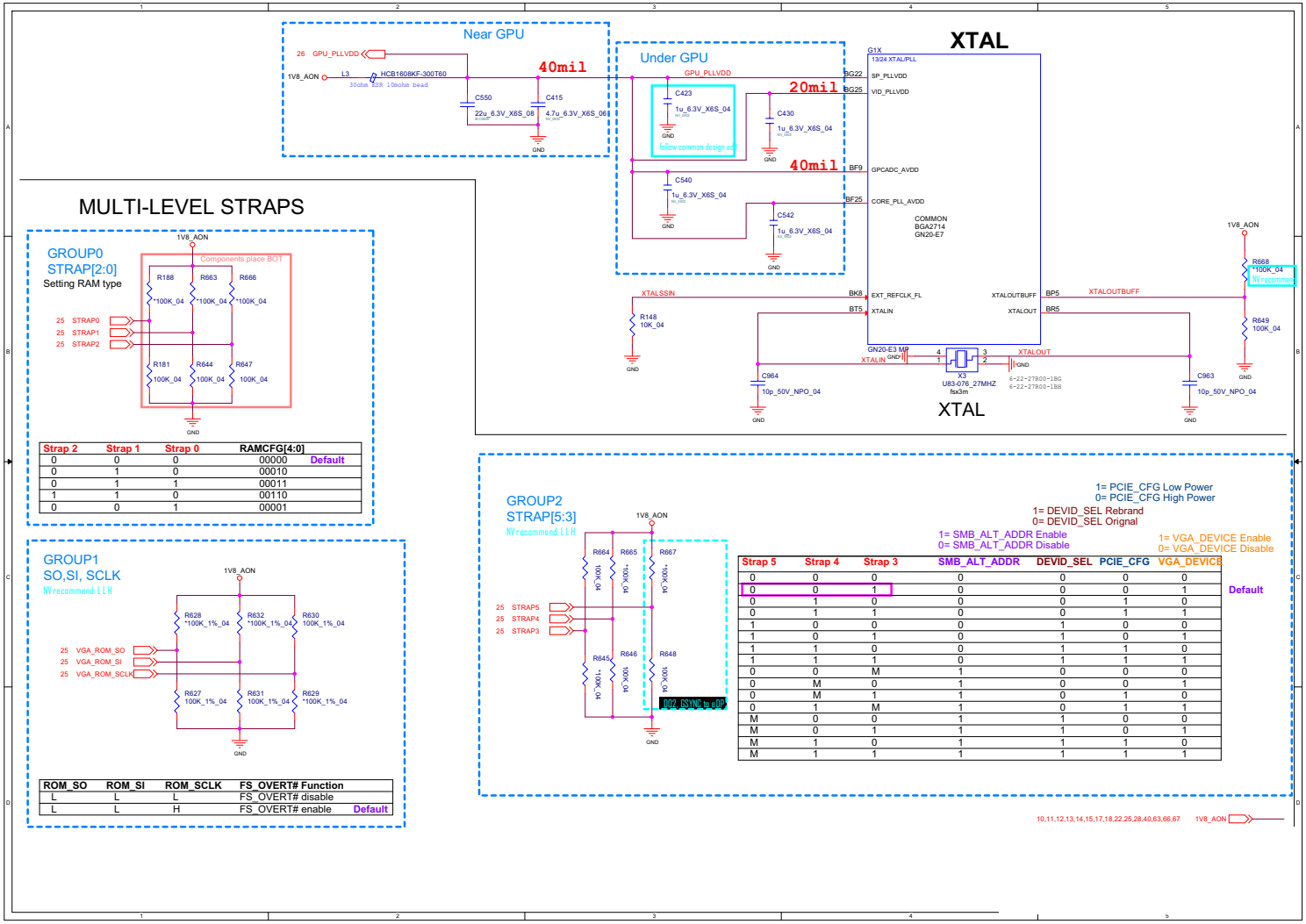

Strap 2	Strap 1	Strap 0	RAMCFG[4:0]	
0	0	0	00000	Default
0	1	0	00010	
0	1	1	00011	
1	1	0	00110	
0	0	1	00001	

ROM_SO	ROM_SI	ROM_SCLK	FS_OVERT# Function	
L	L	L	FS_OVERT# disable	
L	L	H	FS_OVERT# enable	Default

Strap 5	Strap 4	Strap 3	SMB_ALT_ADDR	DEVID_SEL	PCIE_CFG	VGA_DEVICE	
0	0	0	0	0	0	0	
0	0	1	0	0	0	1	Default
0	1	0	0	0	1	0	
0	1	1	0	0	1	1	
1	0	0	0	1	0	0	
1	0	1	0	1	0	1	
1	1	0	0	1	1	0	
1	1	1	0	1	1	1	
0	0	M	1	0	0	0	
0	M	0	1	0	0	1	
0	M	1	1	0	1	0	
0	1	M	1	0	1	1	
M	0	0	1	1	0	0	
M	0	1	1	1	0	1	
M	1	0	1	1	1	0	
M	1	1	1	1	1	1	

NVIDIA Power Sequence

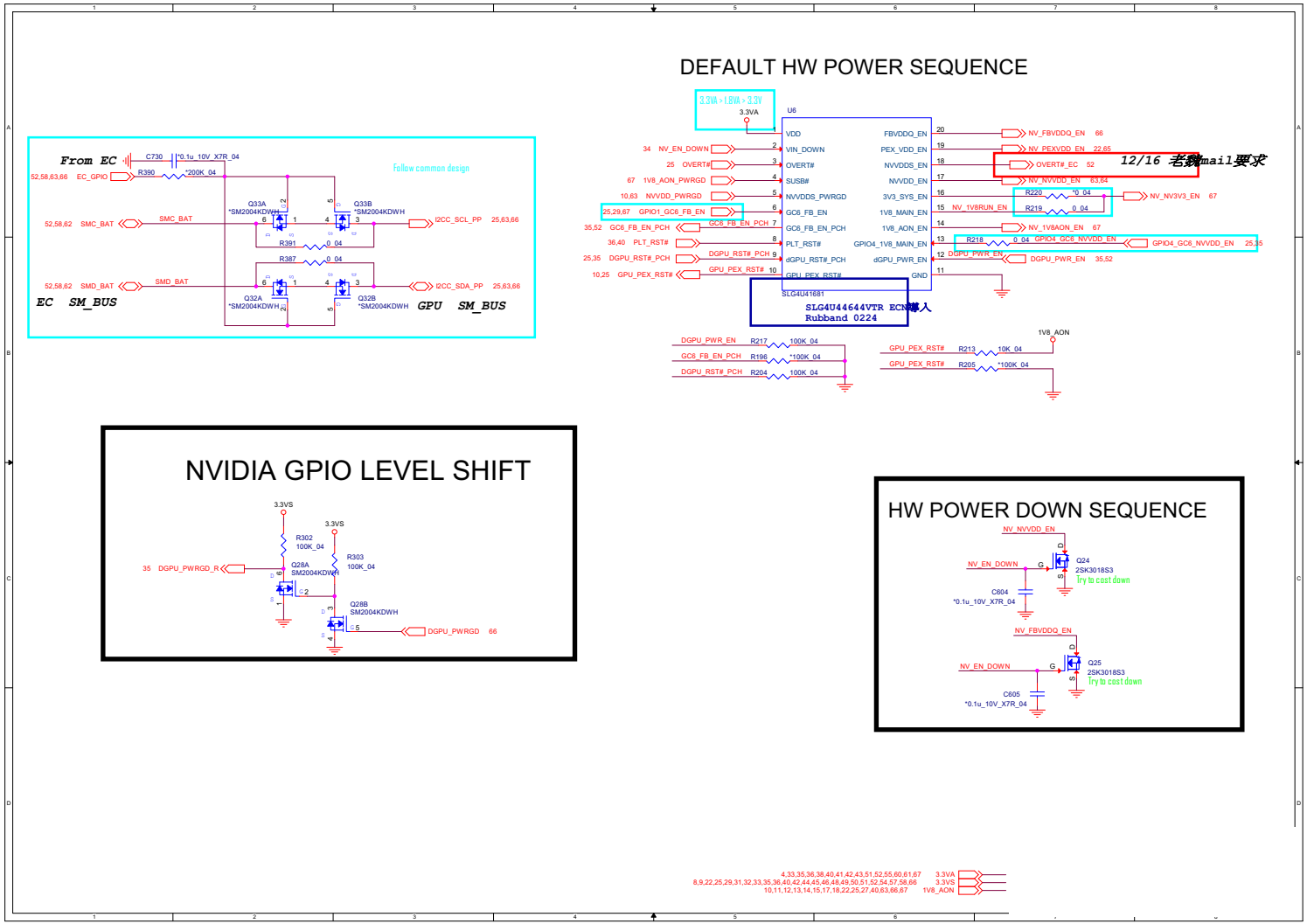

Sheet 26 of 69
NVIDIA Power Sequence

B.Schematic Diagrams

OVR-M

Sheet 27 of 69
OVR-M

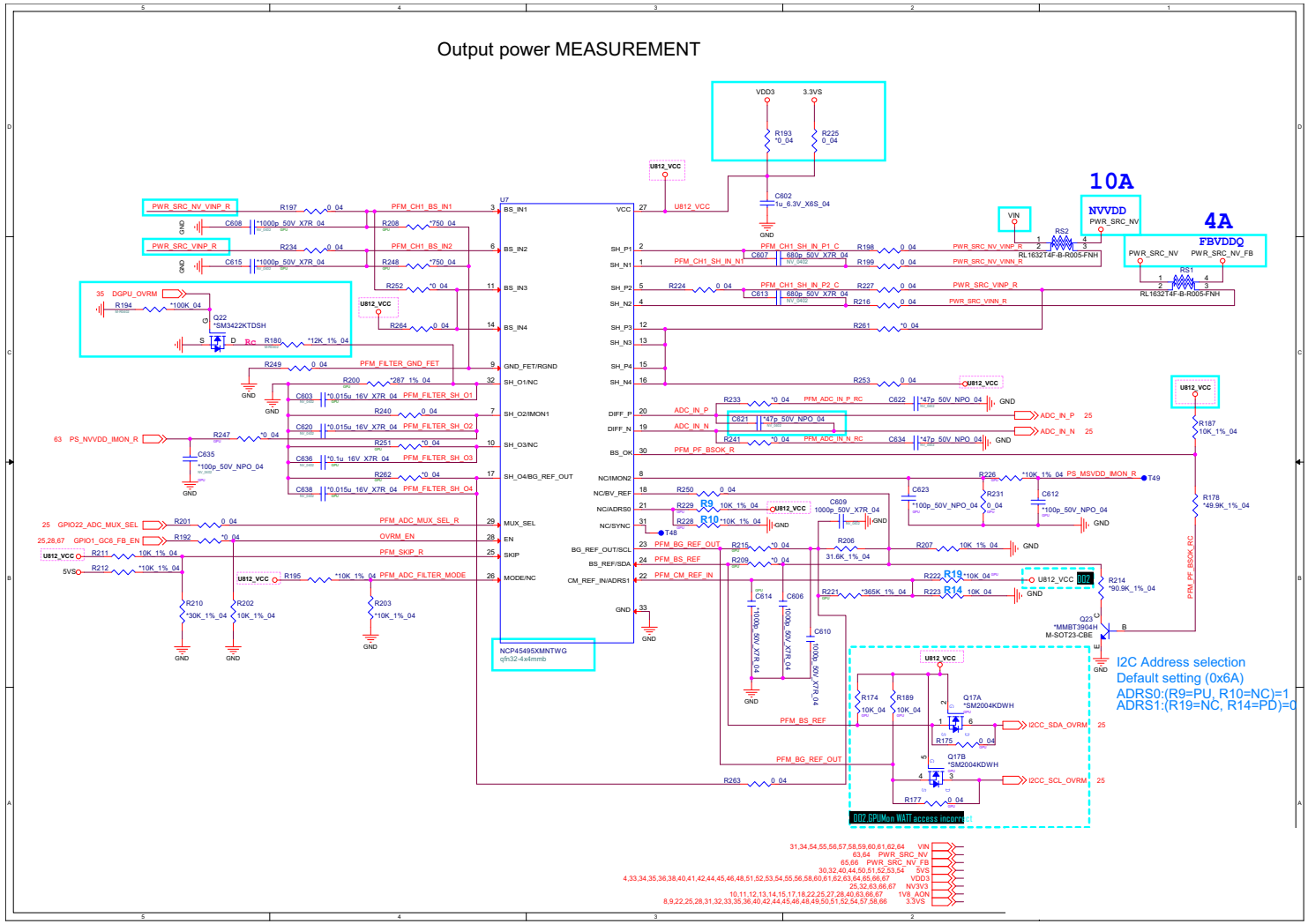

mDP

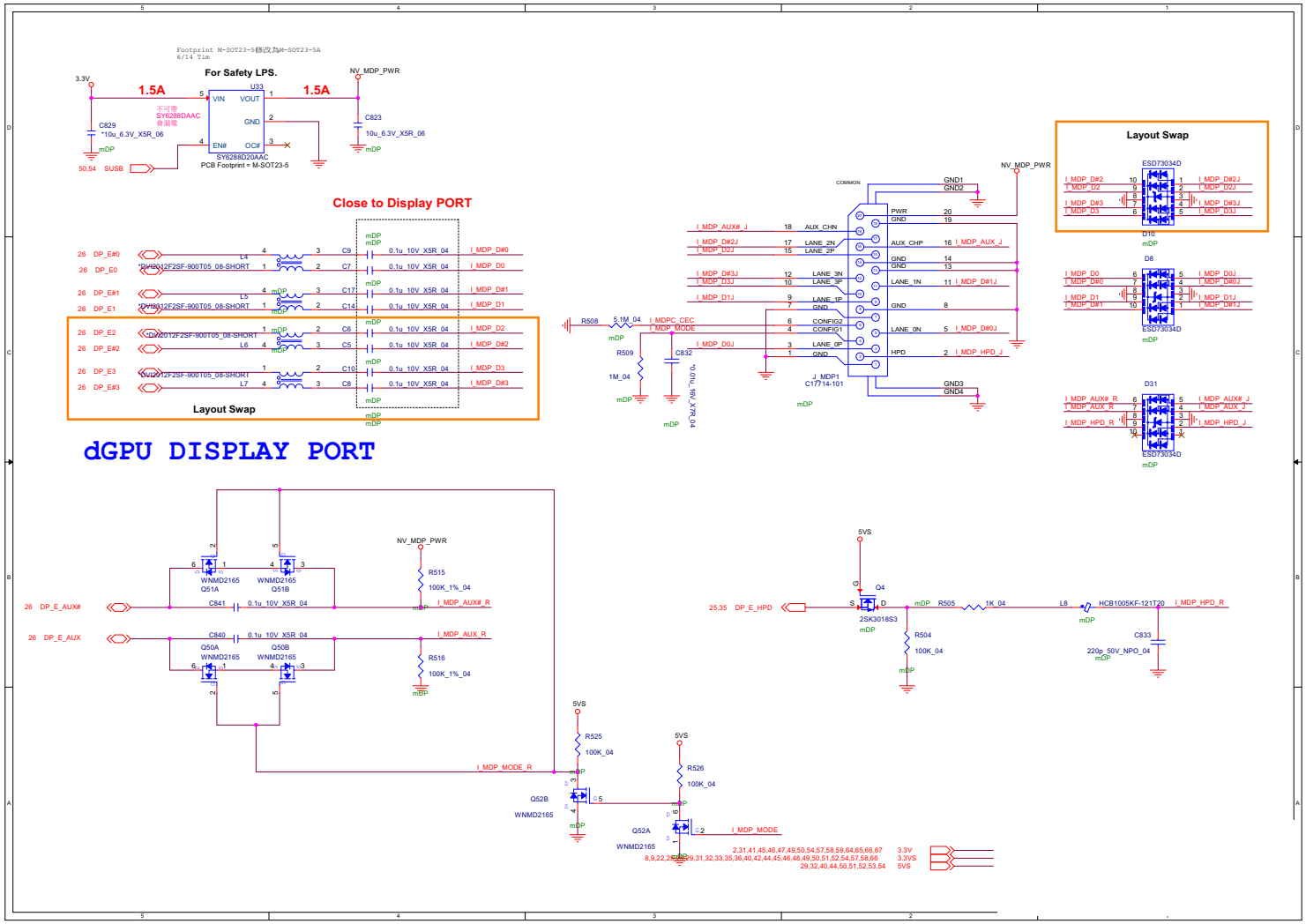

Sheet 28 of 69
mDP

Panel, Inverter

Sheet 29 of 69
Panel, Inverter

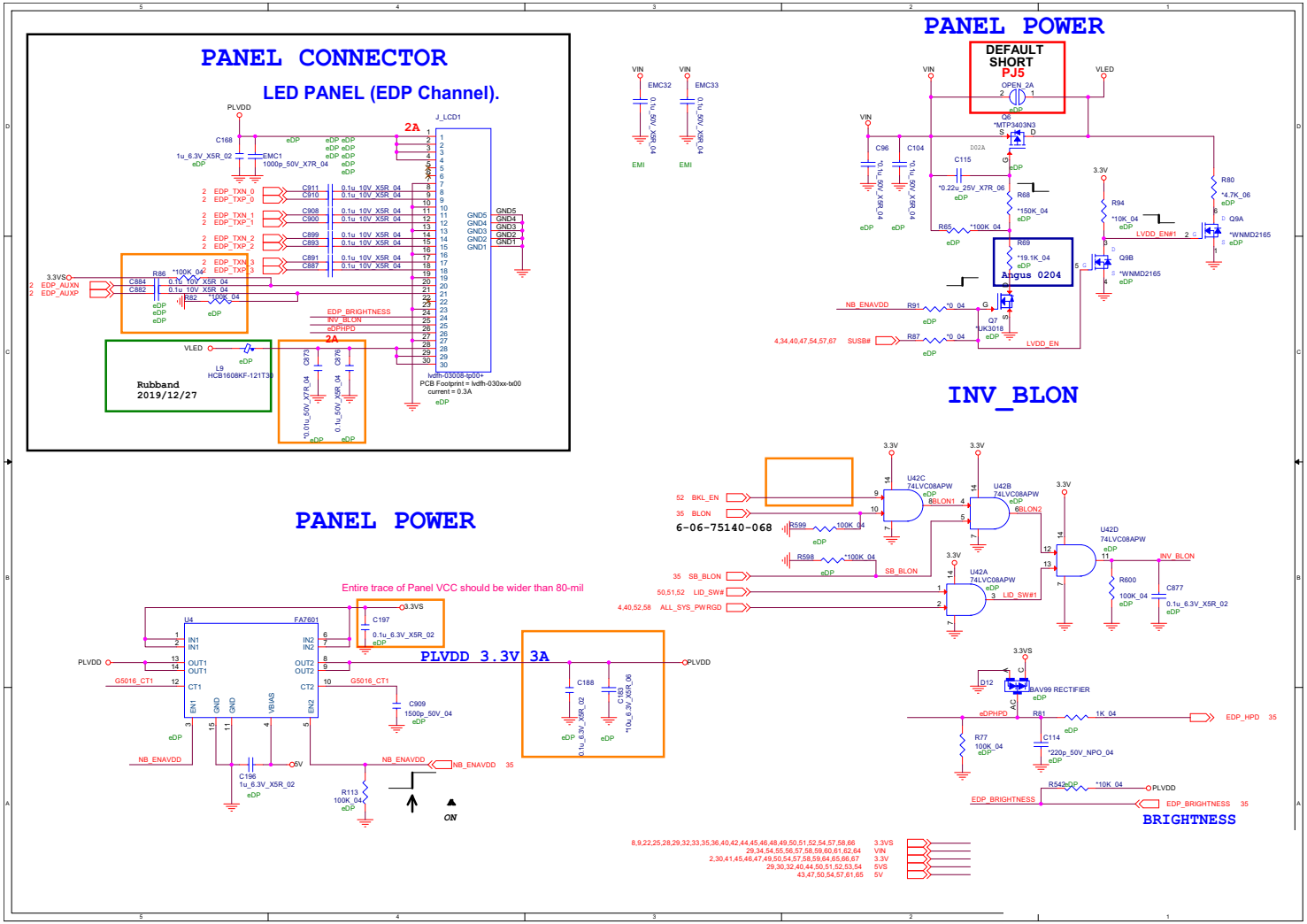

HDMI

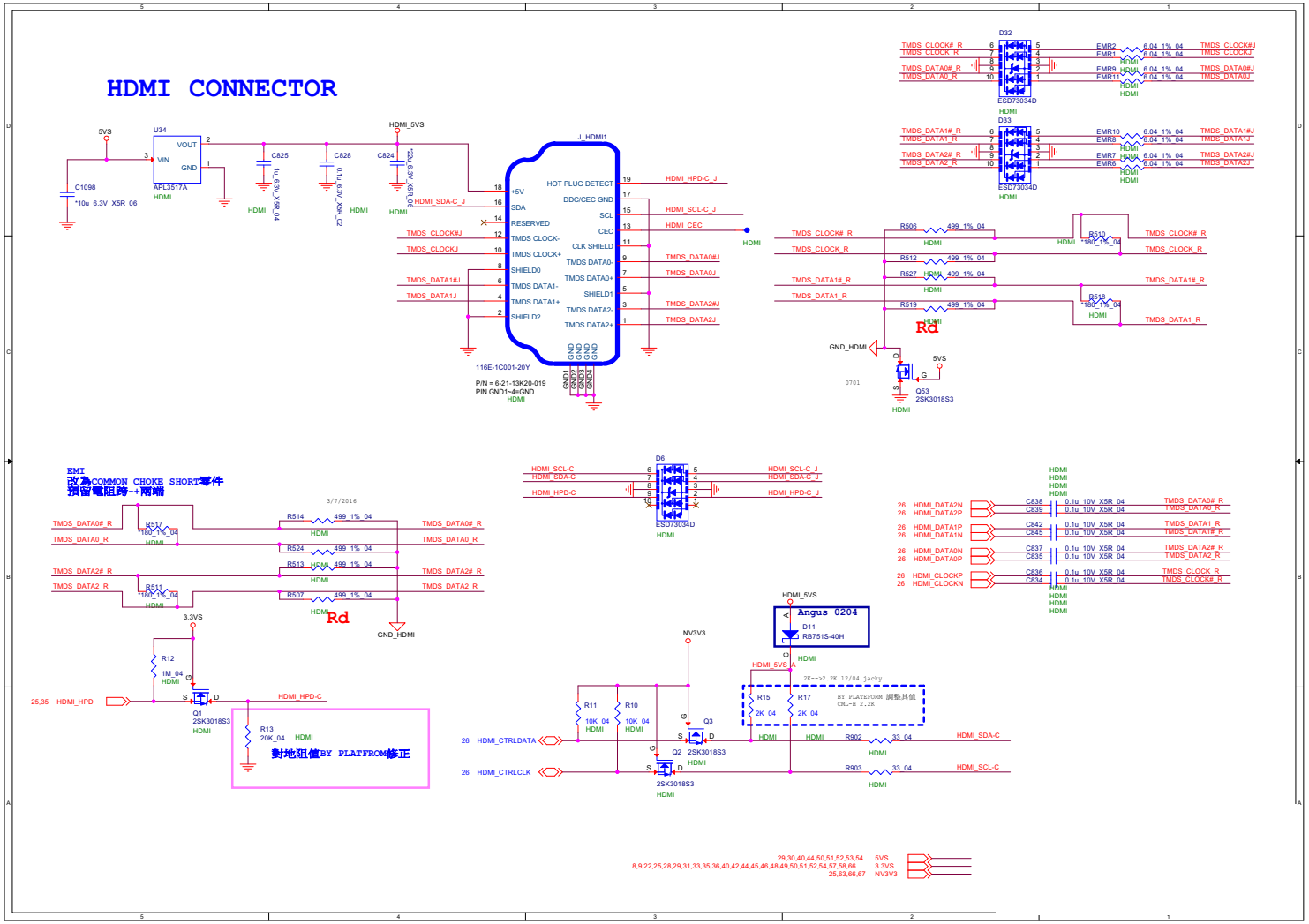

Sheet 30 of 69
HDMI

PCH 1/8

Sheet 31 of 69
PCH 1/8

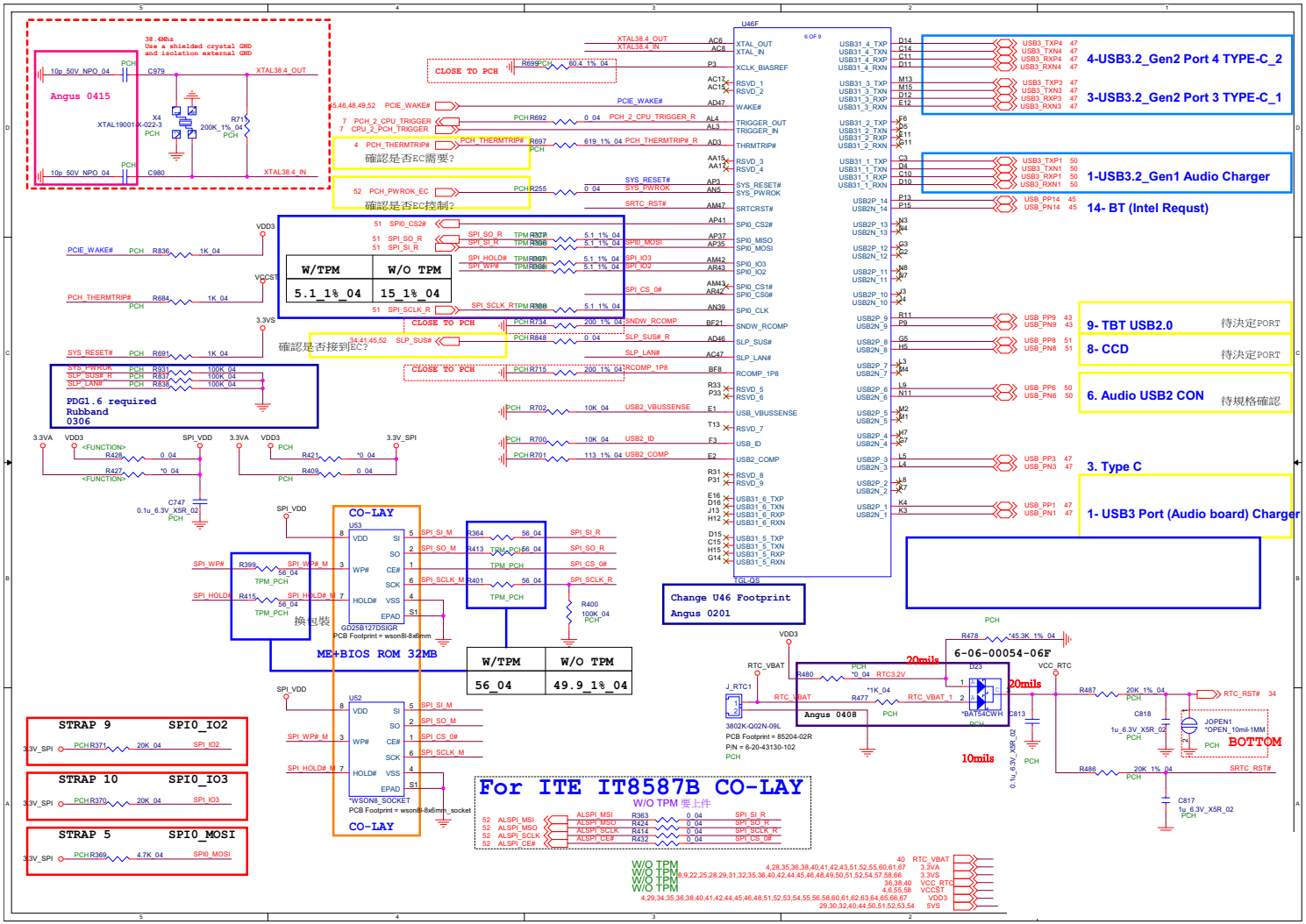

PCH 2/8

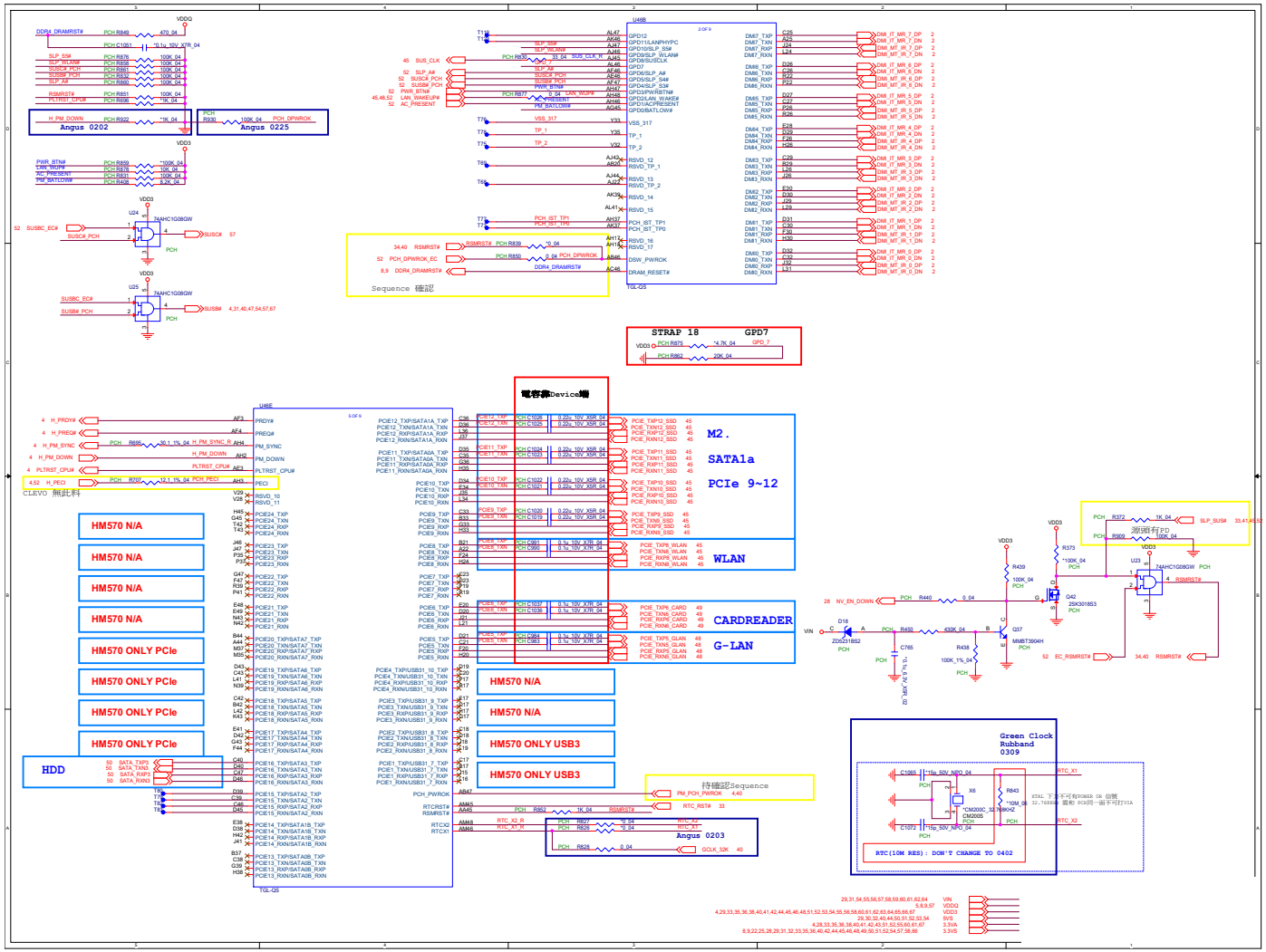

Sheet 32 of 69
PCH 2/8

B.Schematic Diagrams

PCH 3/8

Sheet 33 of 69
PCH 3/8

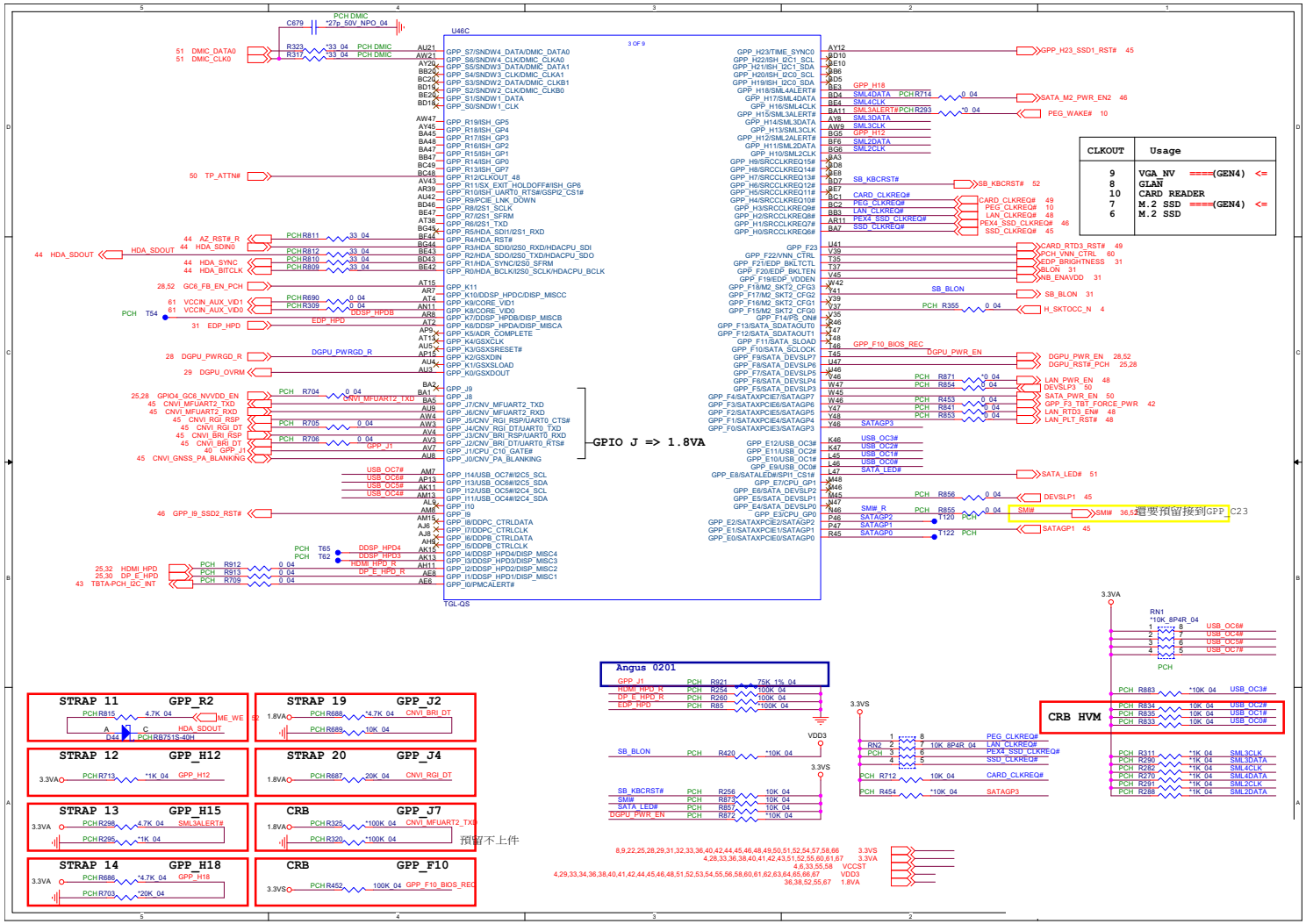

PCH 4/8

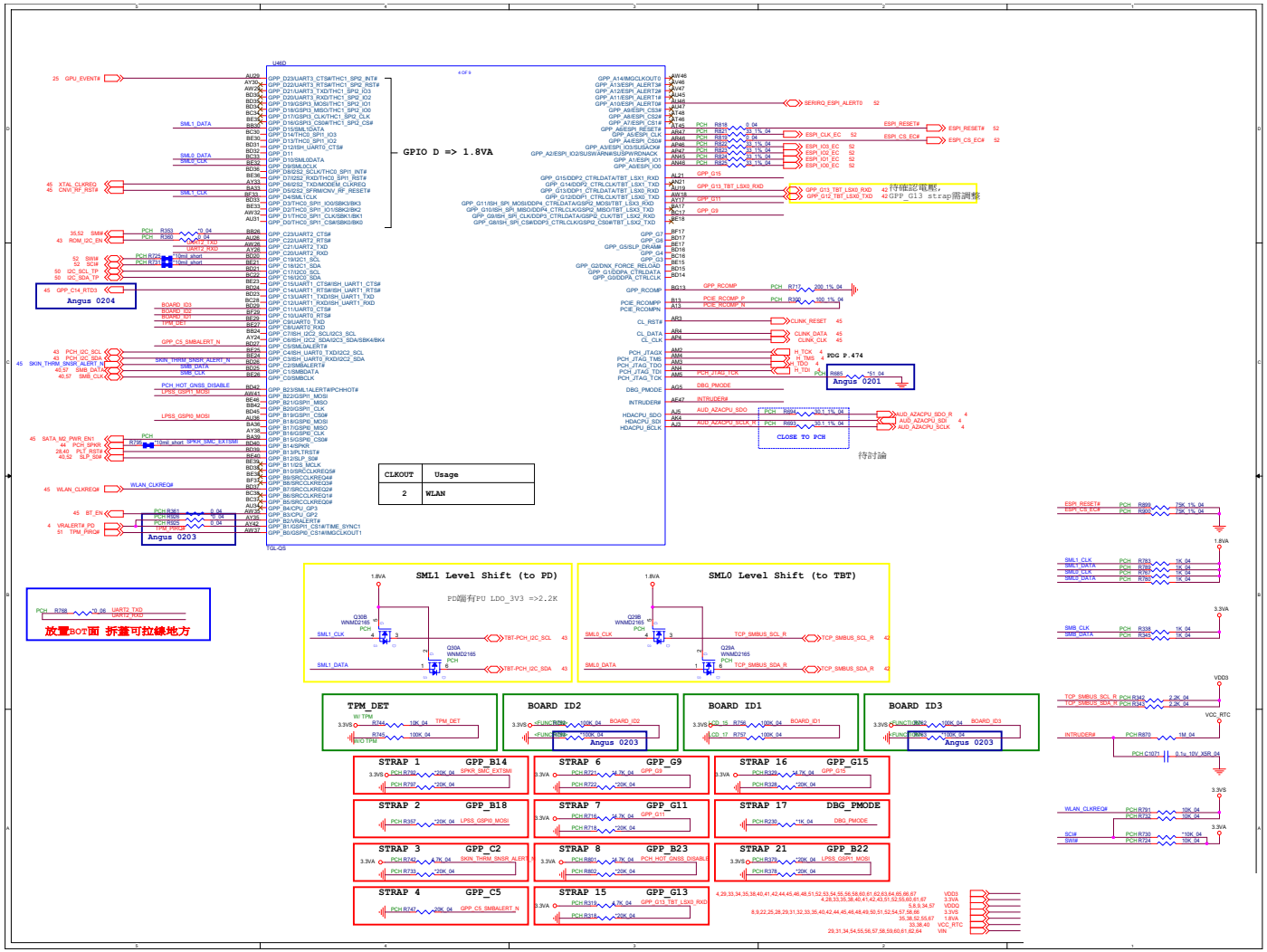

Sheet 34 of 69
PCH 4/8

PCH 5/8

Sheet 35 of 69
PCH 5/8

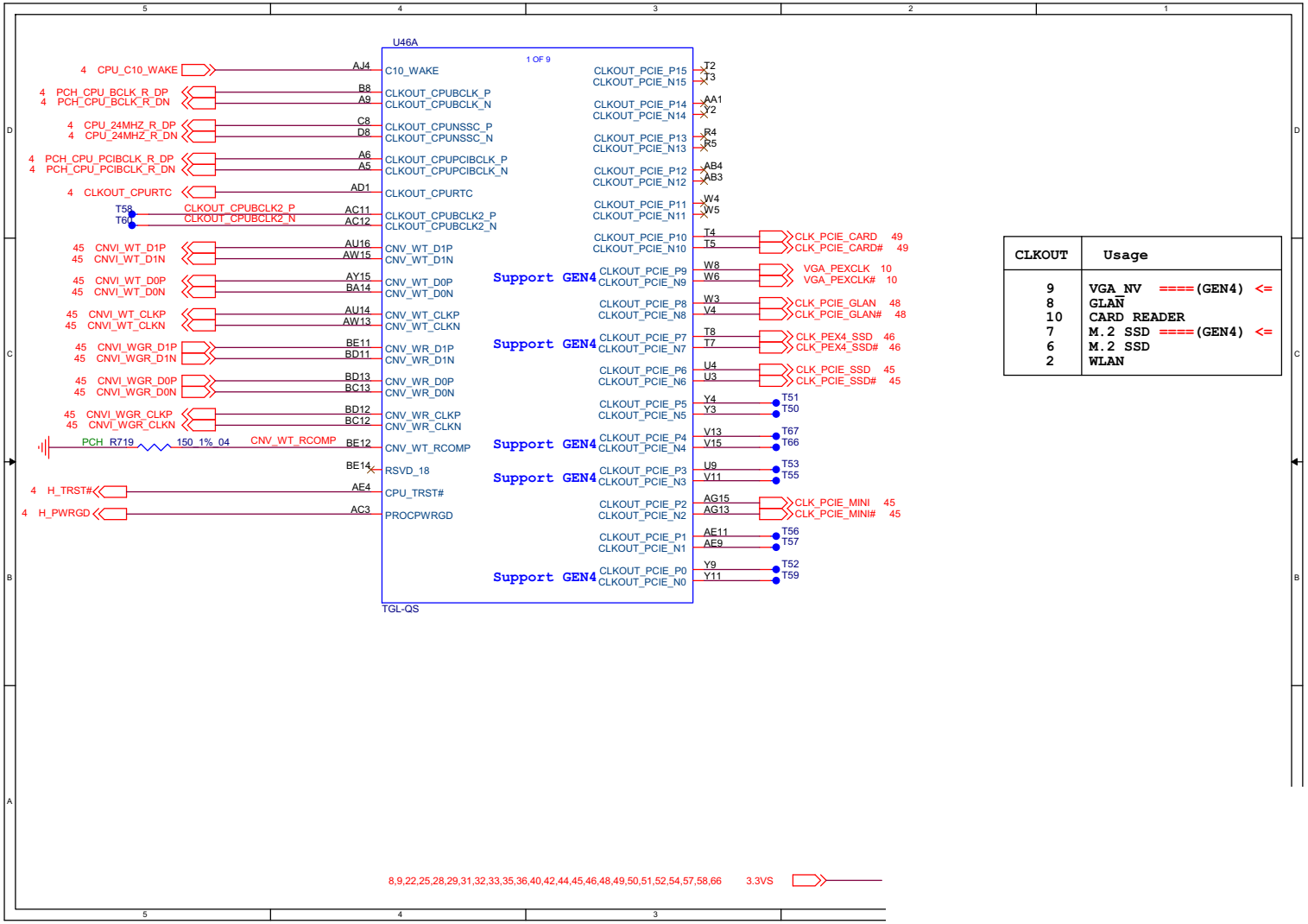

CLKOUT	Usage
9	VGA_NV ====(GEN4) <=
8	GLAN
10	CARD READER
7	M.2 SSD ====(GEN4) <=
6	M.2 SSD
2	WLAN

PCH 6/8

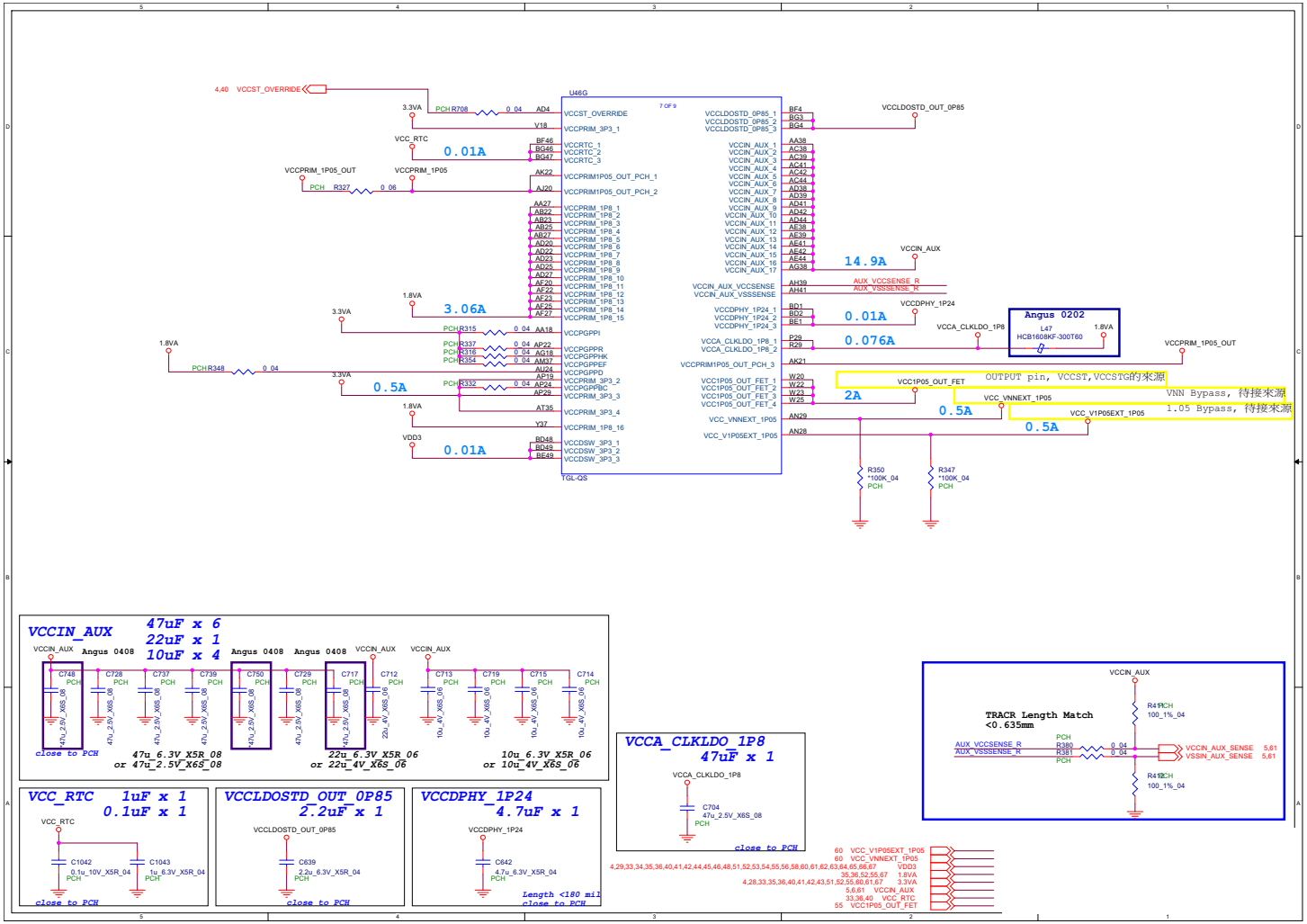

Sheet 36 of 69
PCH 6/8

PCH 7/8

Sheet 37 of 69
PCH 7/8

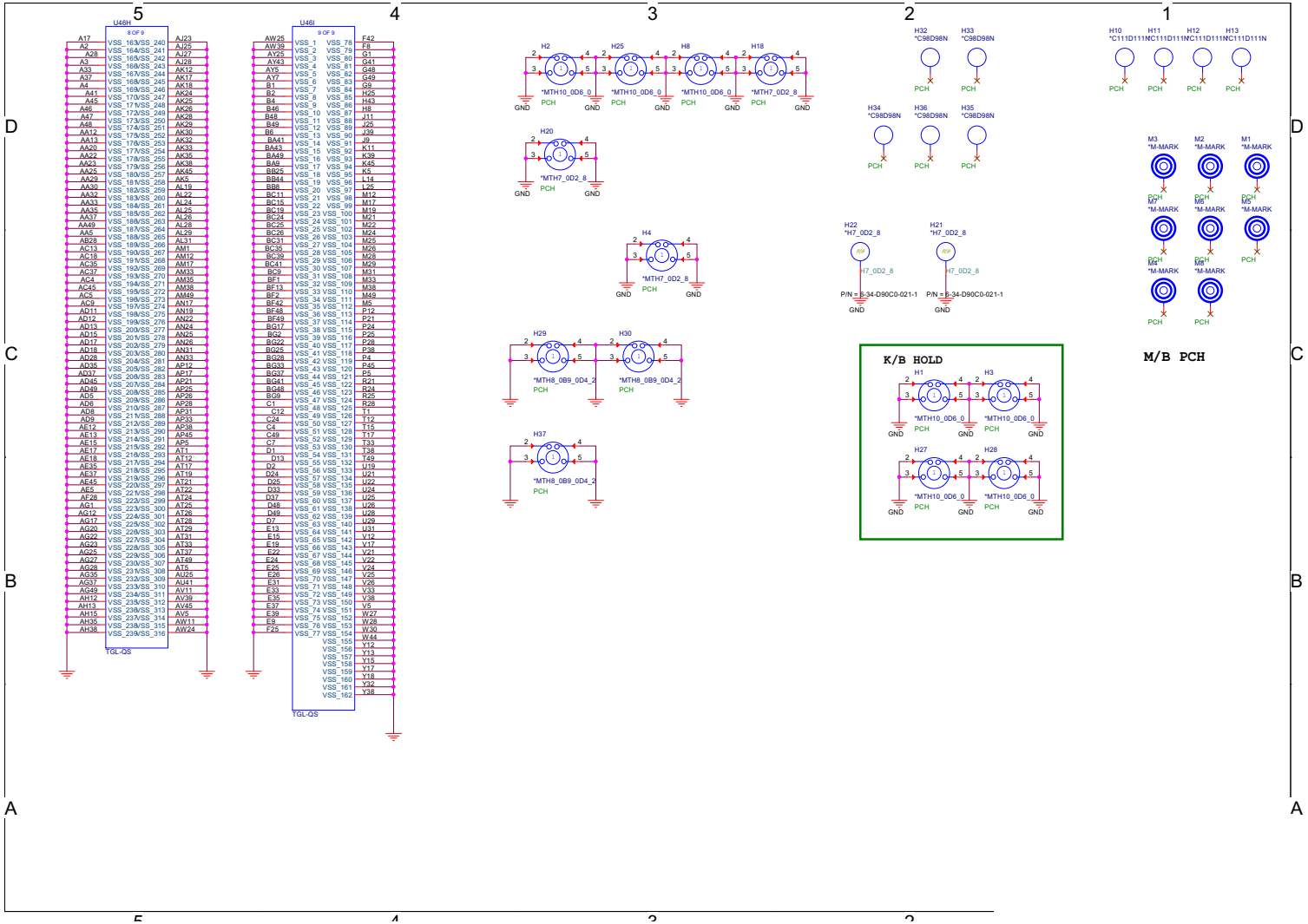

PCH 8/8

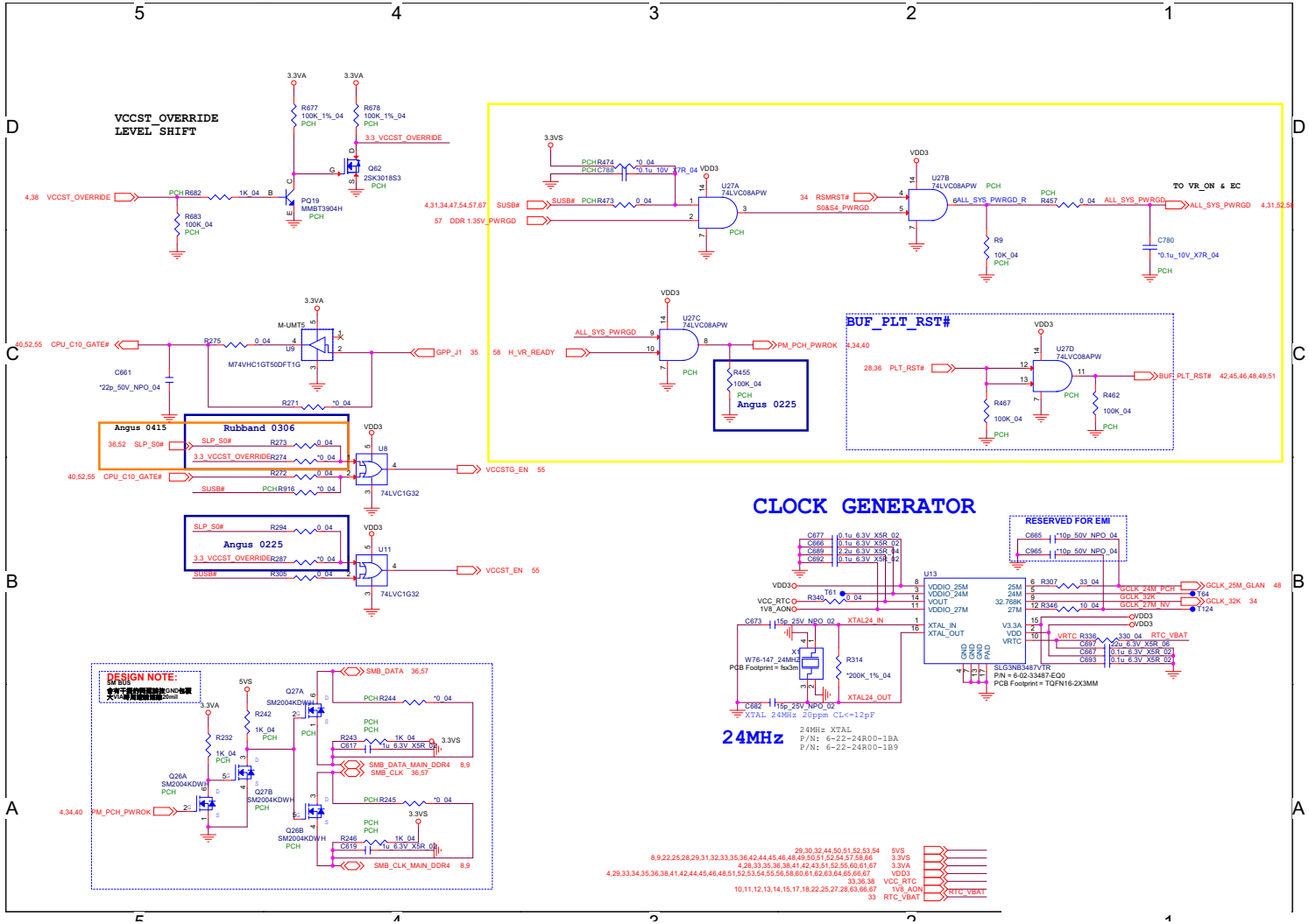

Sheet 38 of 69
PCH 8/8

Retimer 1/2

Sheet 39 of 69
Retimer 1/2

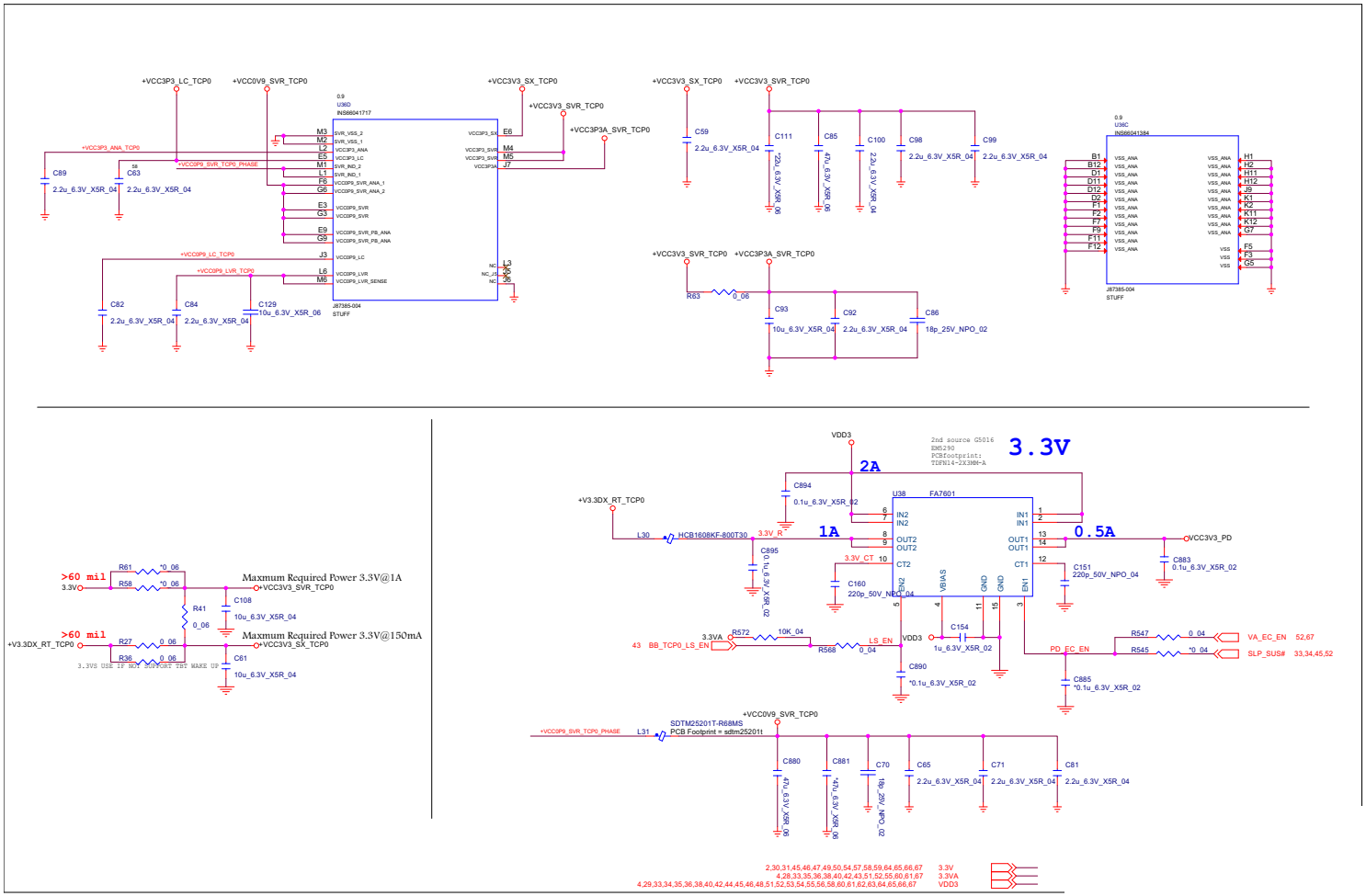

Retimer 2/2

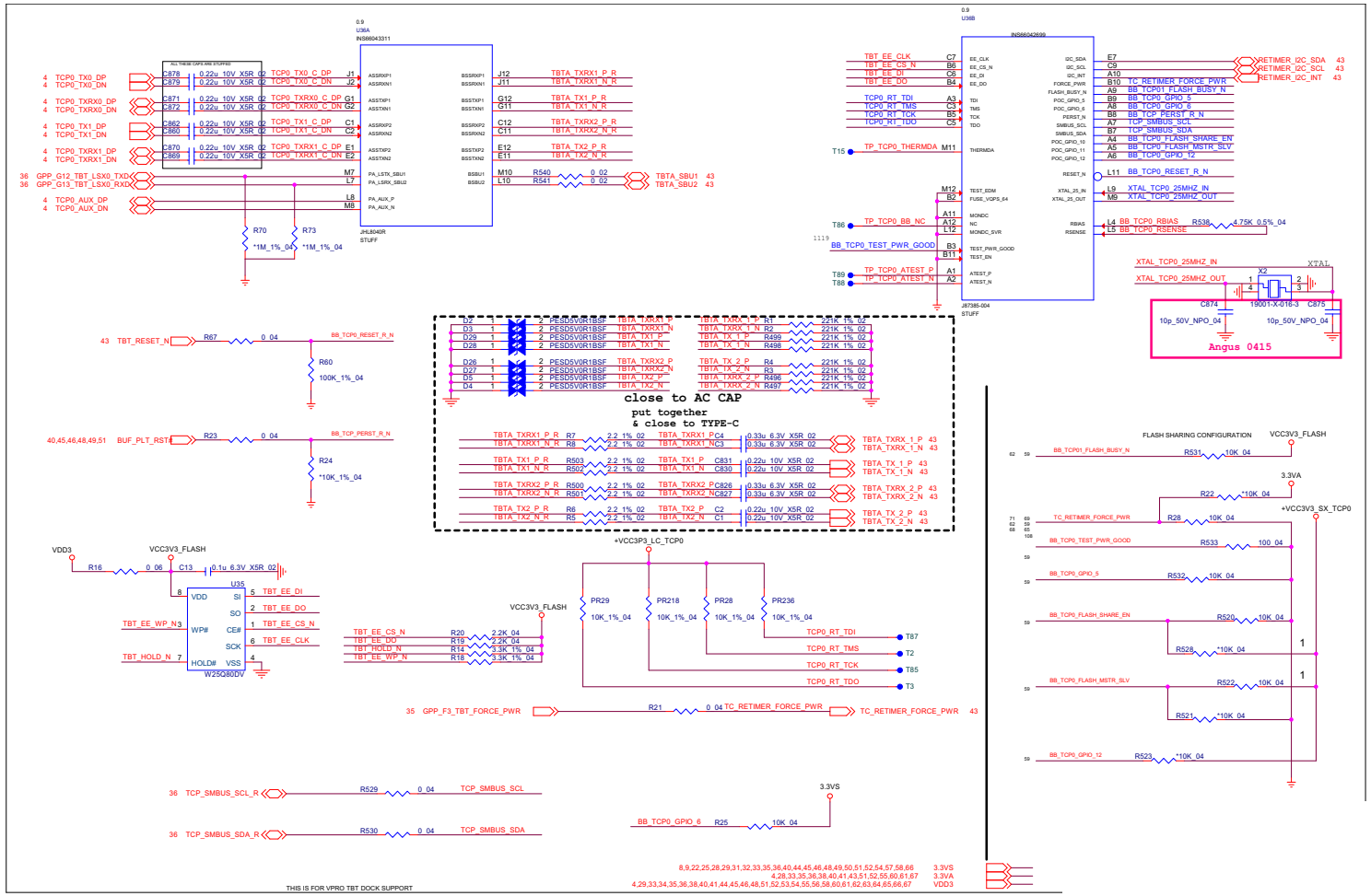

Sheet 40 of 69
Retimer 2/2

PD65993, Type-C

Sheet 41 of 69
PD65993, Type-C

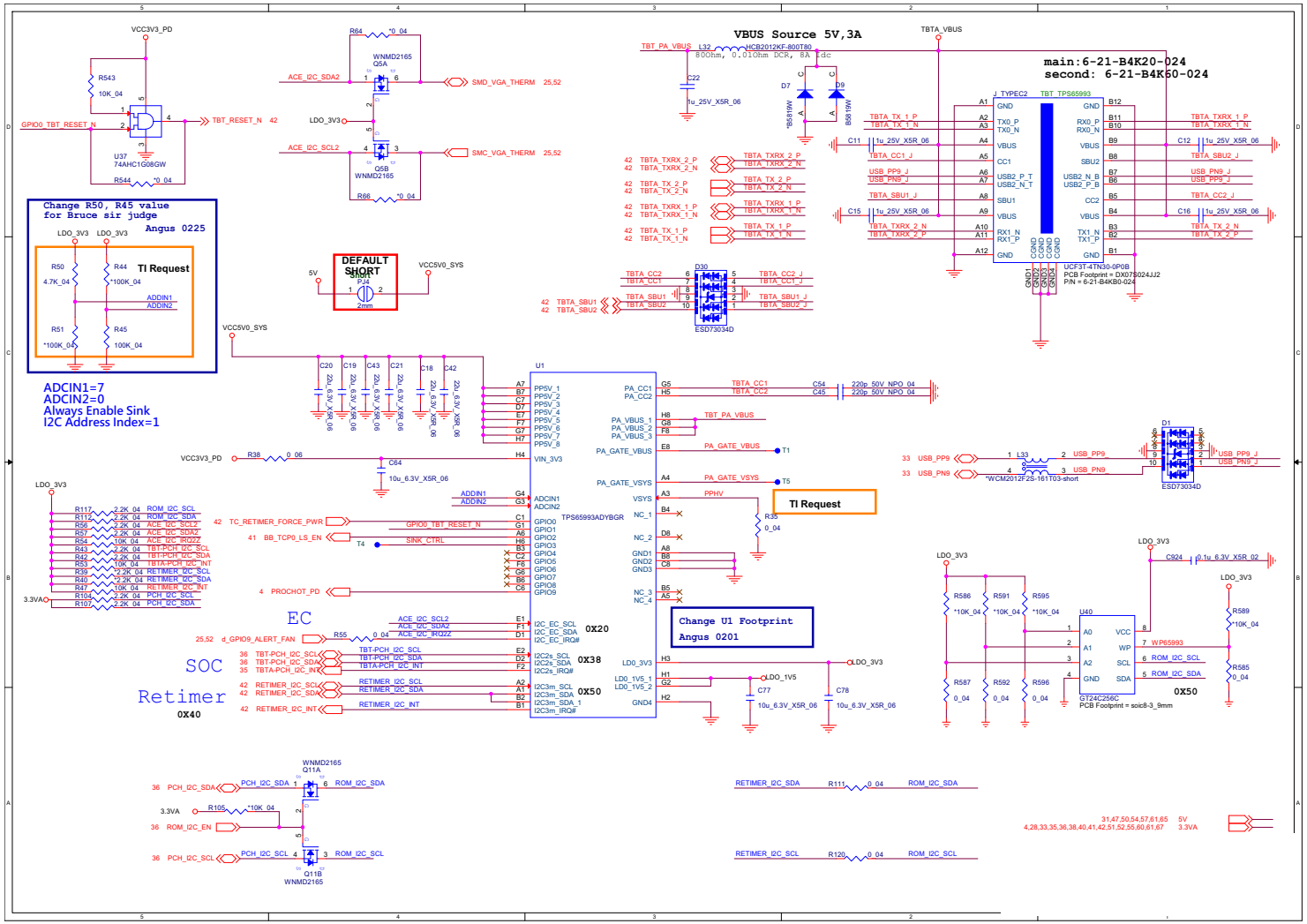

Audio Codec

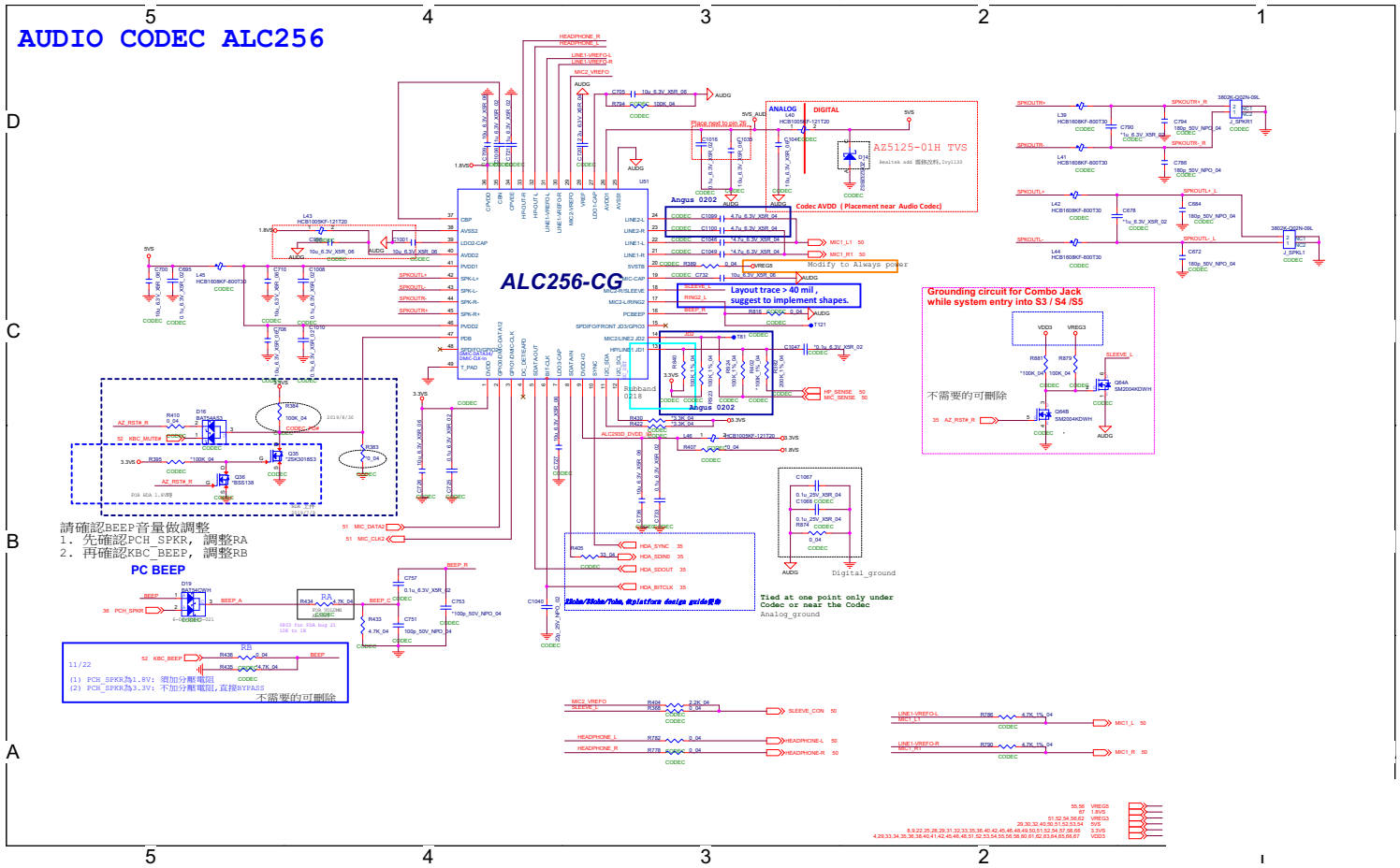

Sheet 42 of 69
Audio Codec

M.2 WLAN+BT, PCIE 4X SSD

Sheet 43 of 69
M.2 WLAN+BT,
PCIE 4X SSD

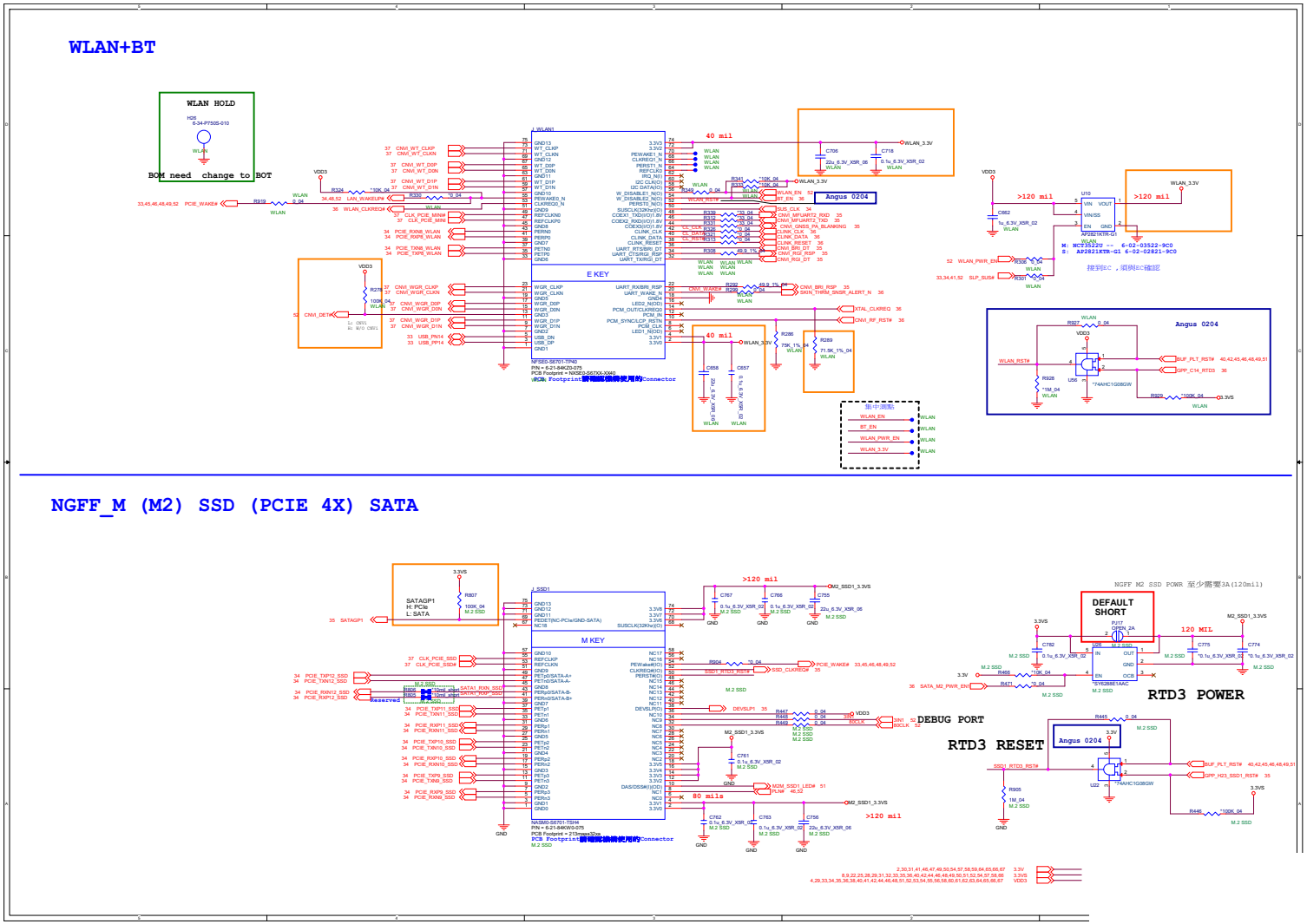

M.2 PCIE 4X SSD

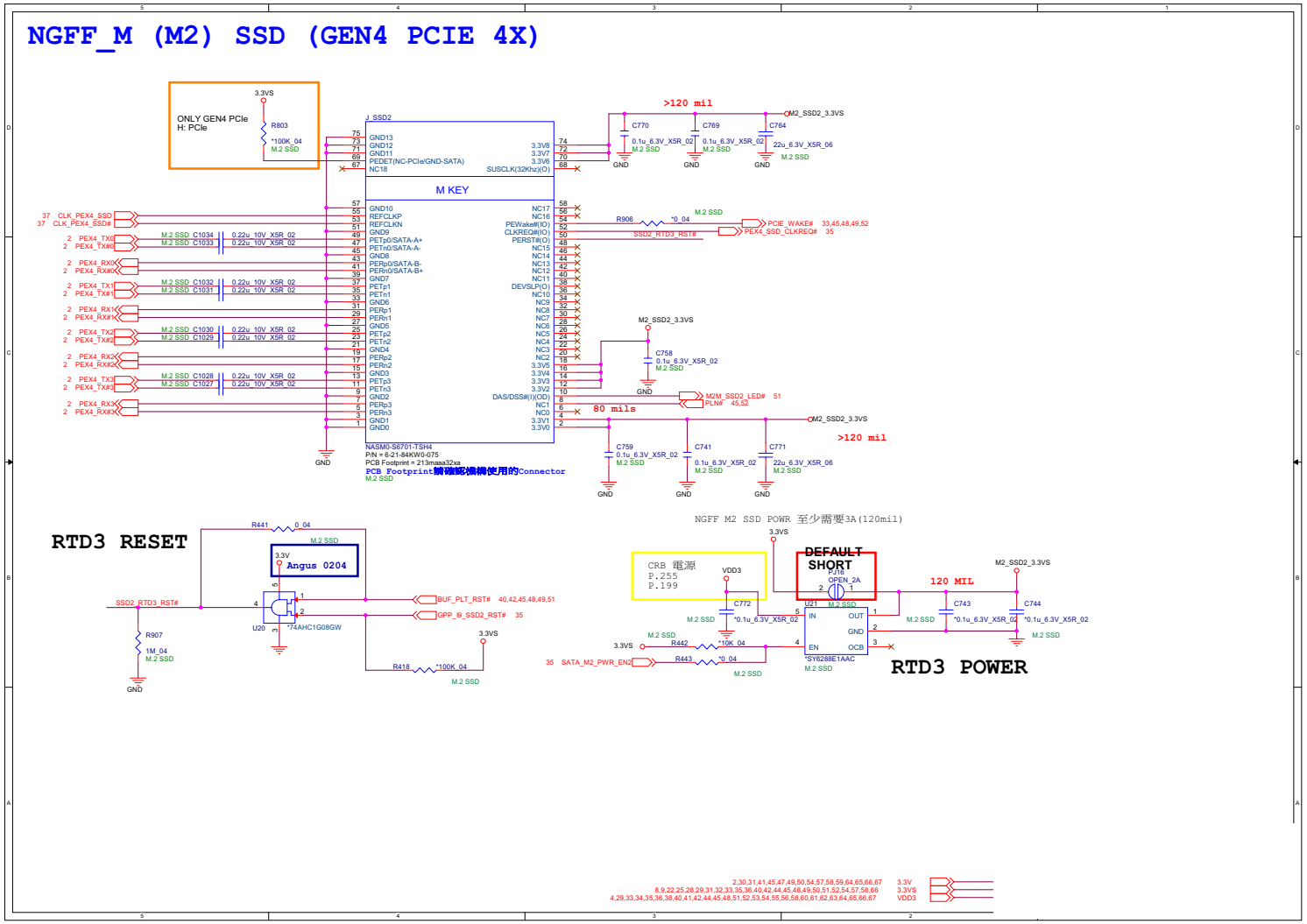

Sheet 44 of 69
M.2 PCIE 4X SSD

Type-C & A

Sheet 45 of 69
Type-C & A

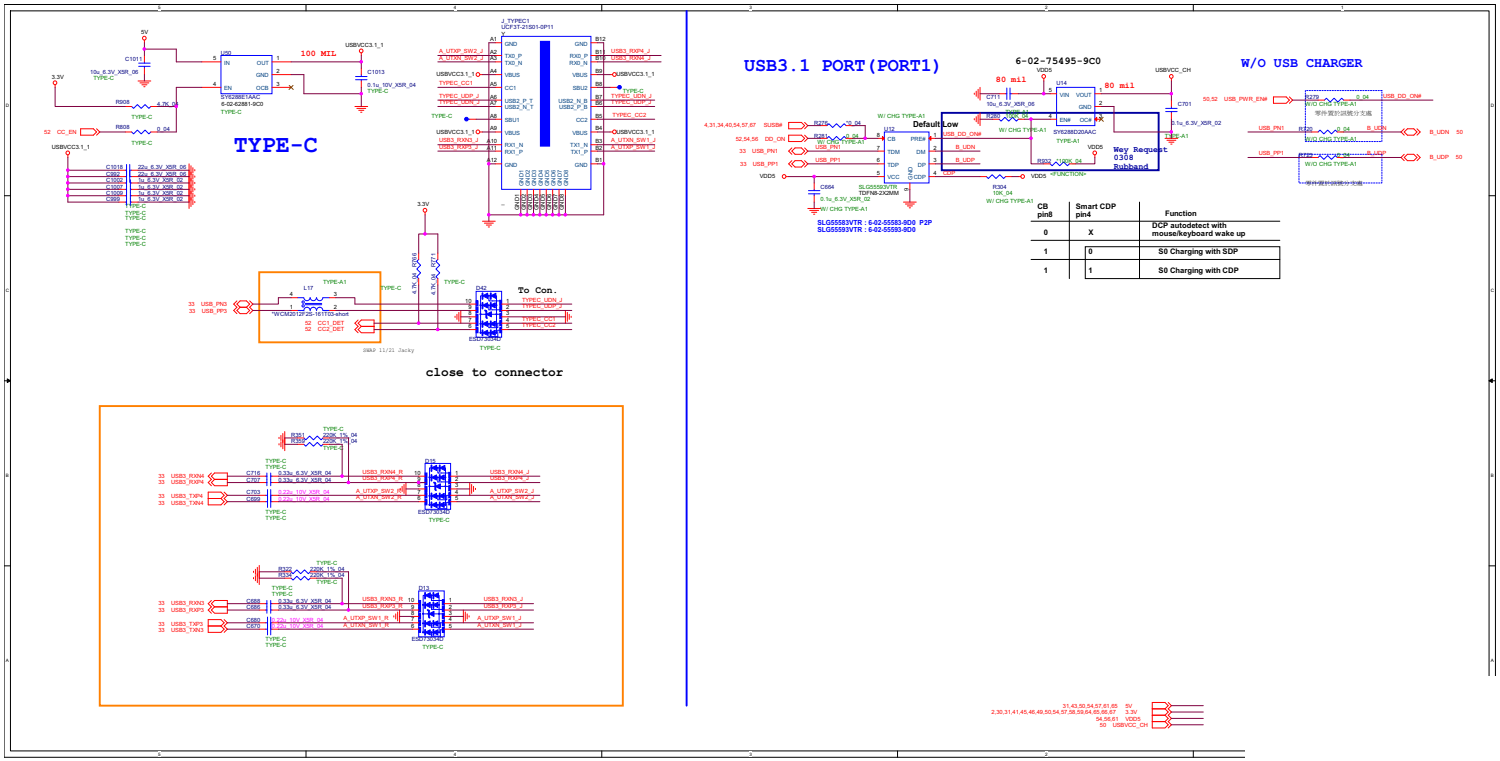

LAN RTL8111H

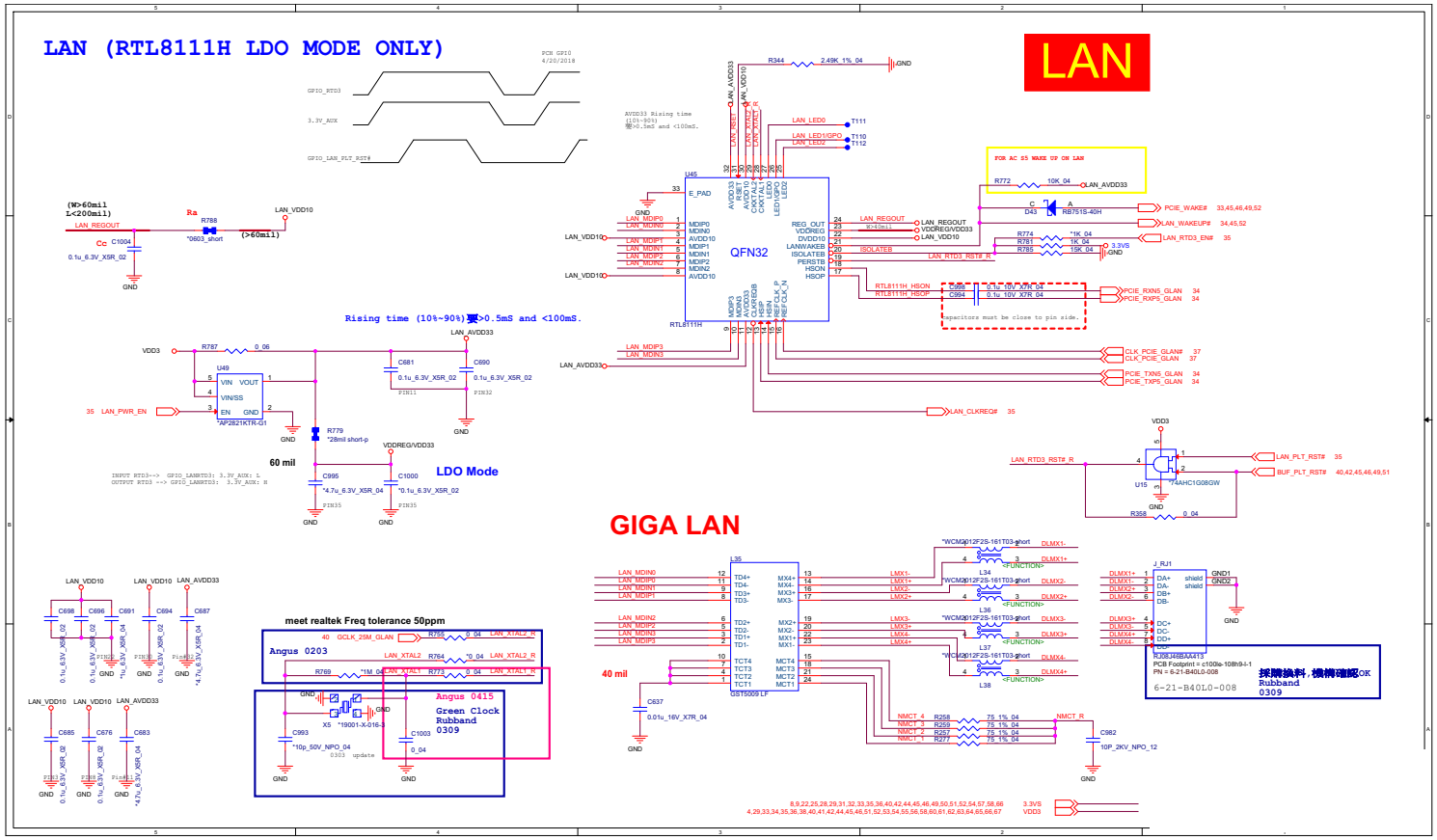

Sheet 46 of 69
LAN RTL8111H

Card Reader

Sheet 47 of 69
Card Reader

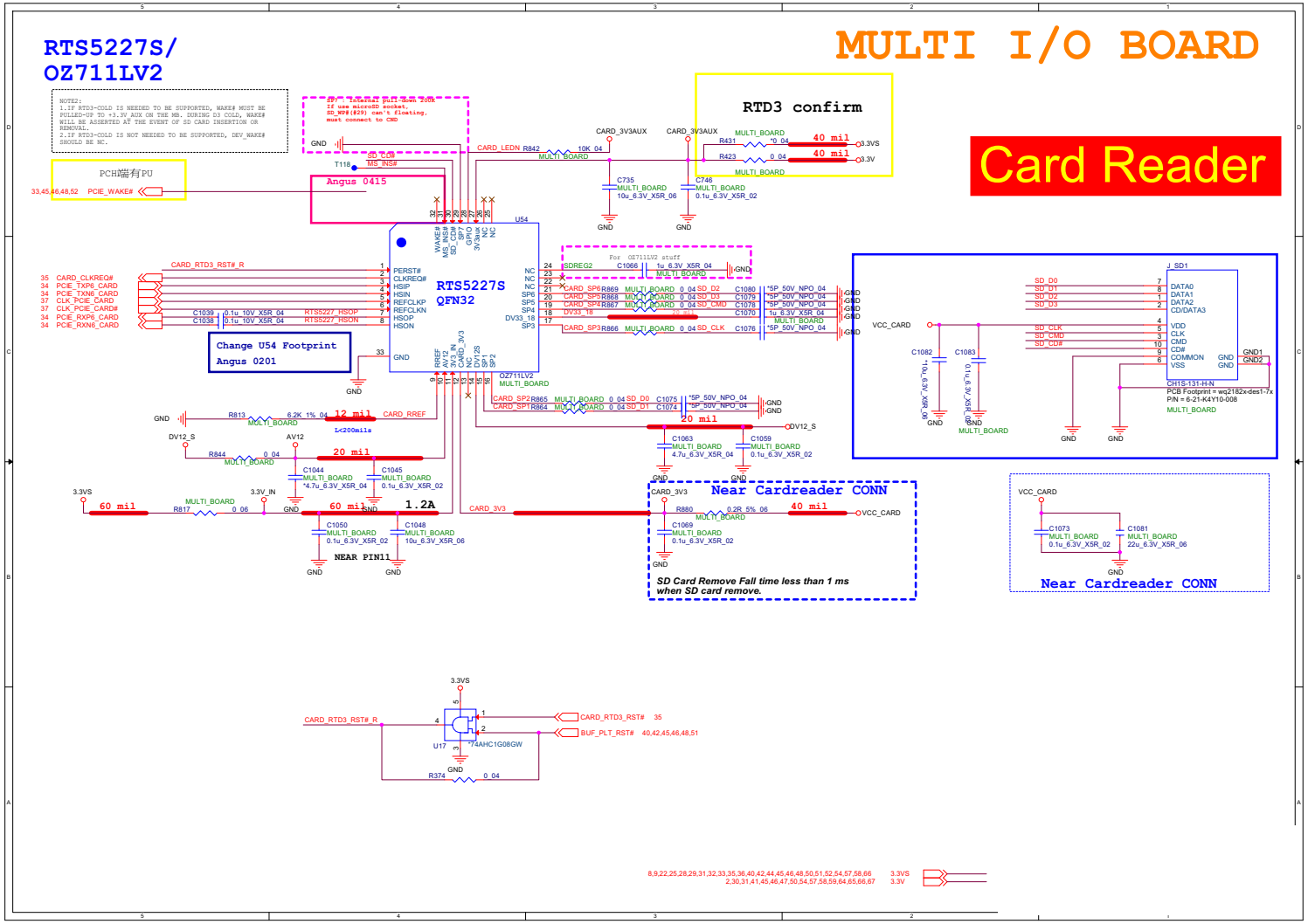

HDD, Click TP, Audio

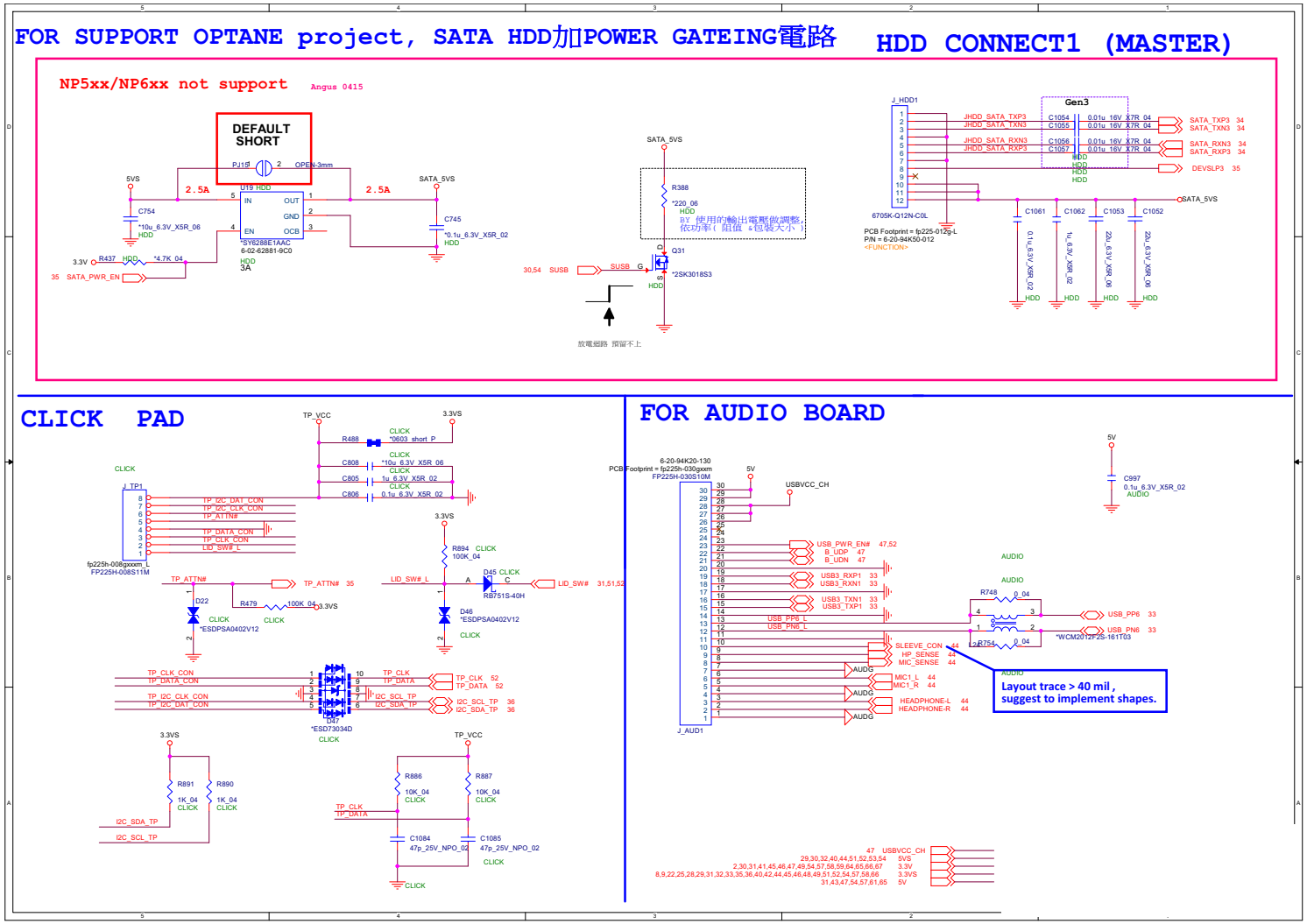

Sheet 48 of 69
HDD, Click TP, Audio

LED, CCD, TPM, Power SW Bd.

Sheet 49 of 69
LED, CCD, TPM, Power SW Bd.

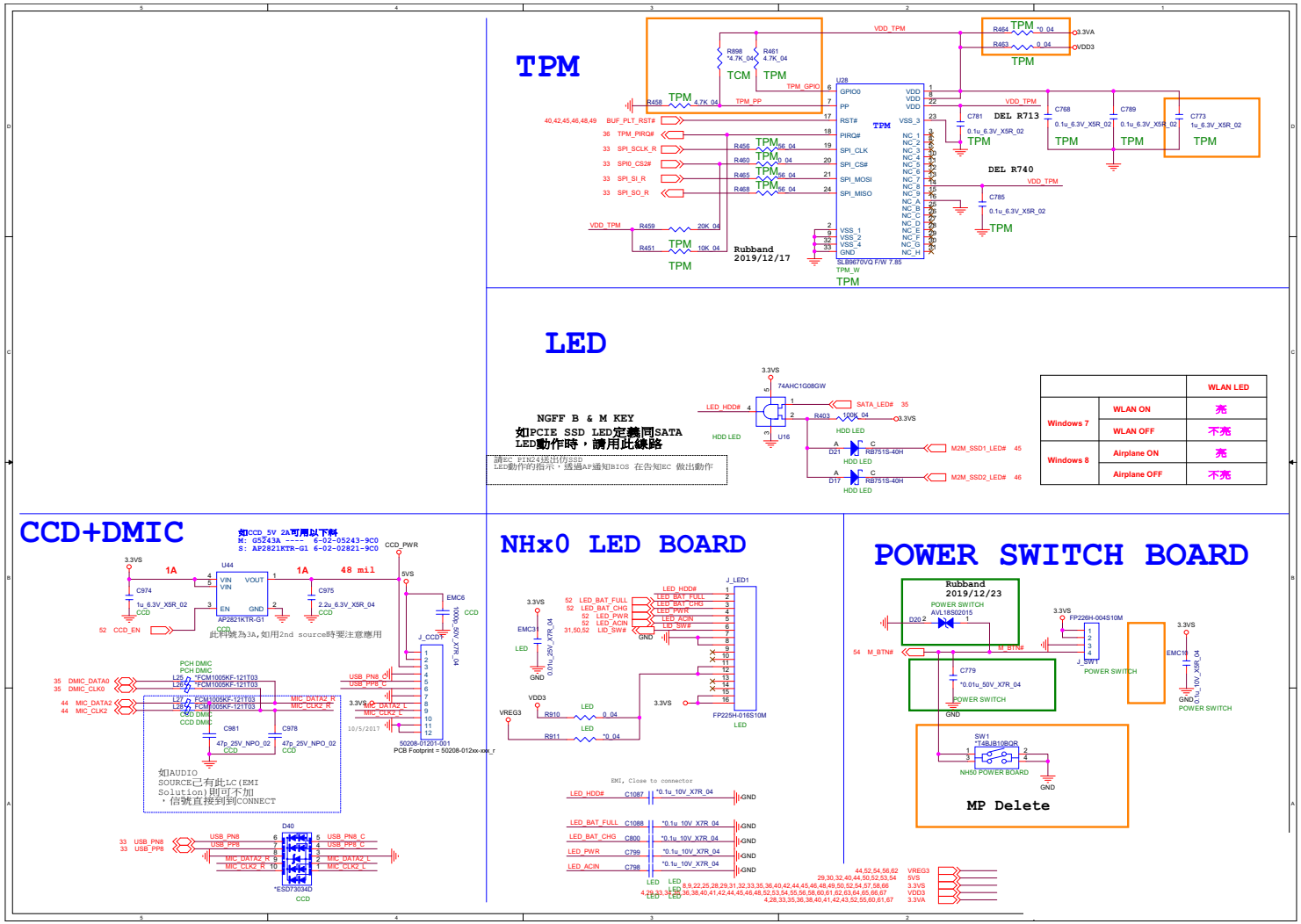

KBC-ITE IT5570

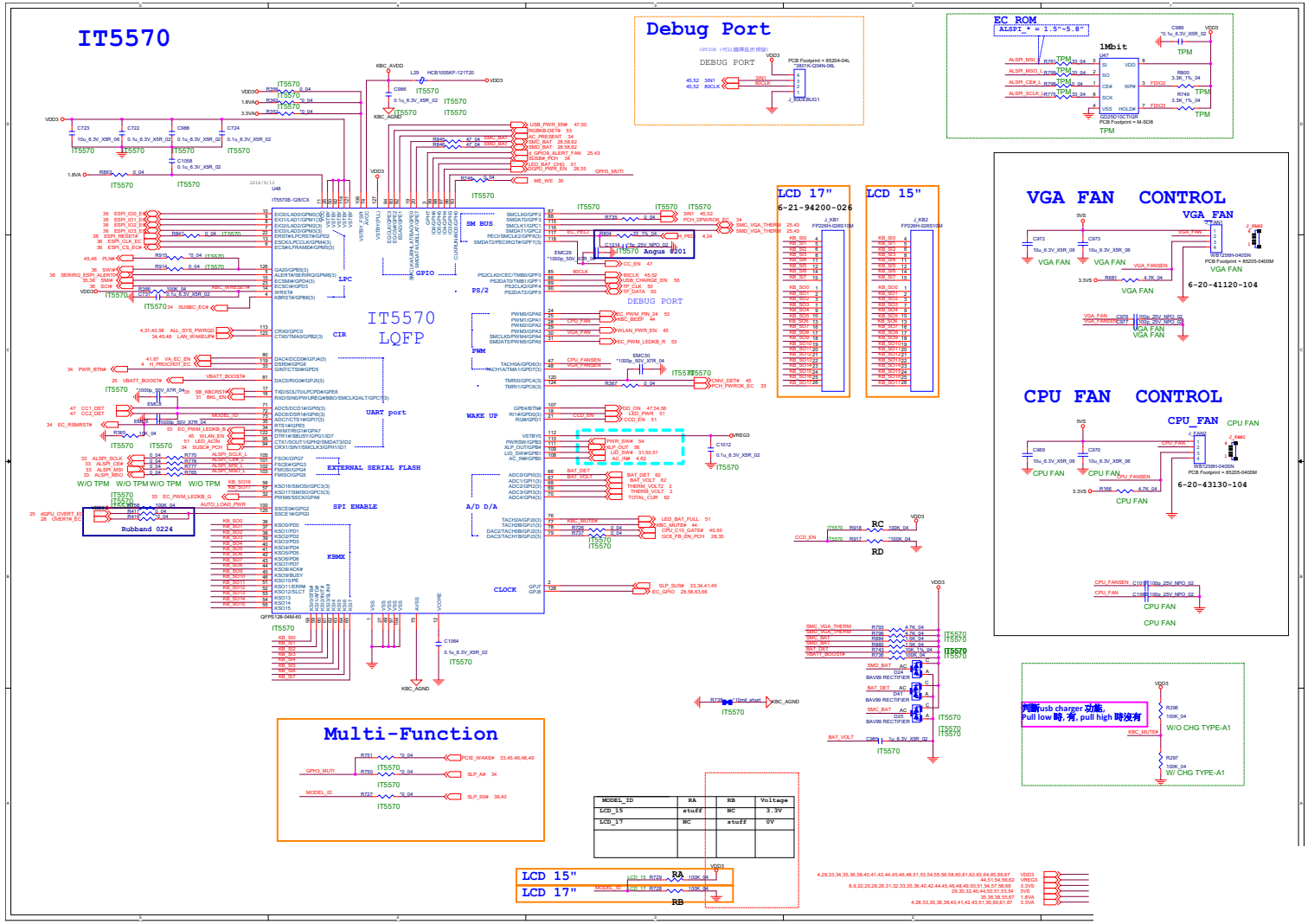

Sheet 50 of 69
KBC-ITE IT5570

RGB KB

Sheet 51 of 69
RGB KB

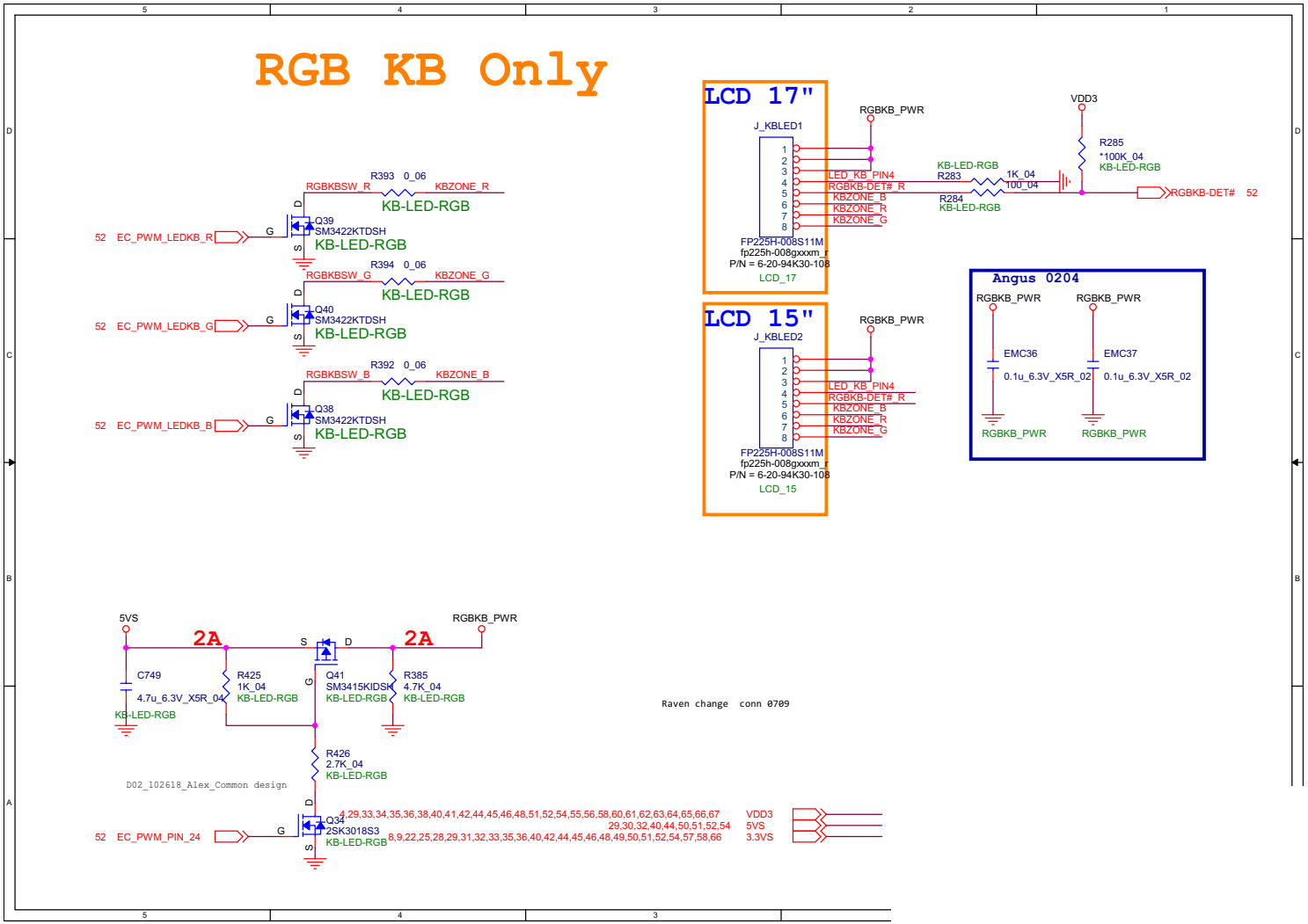

5V, 5VS, 3.3V, 3.3VS

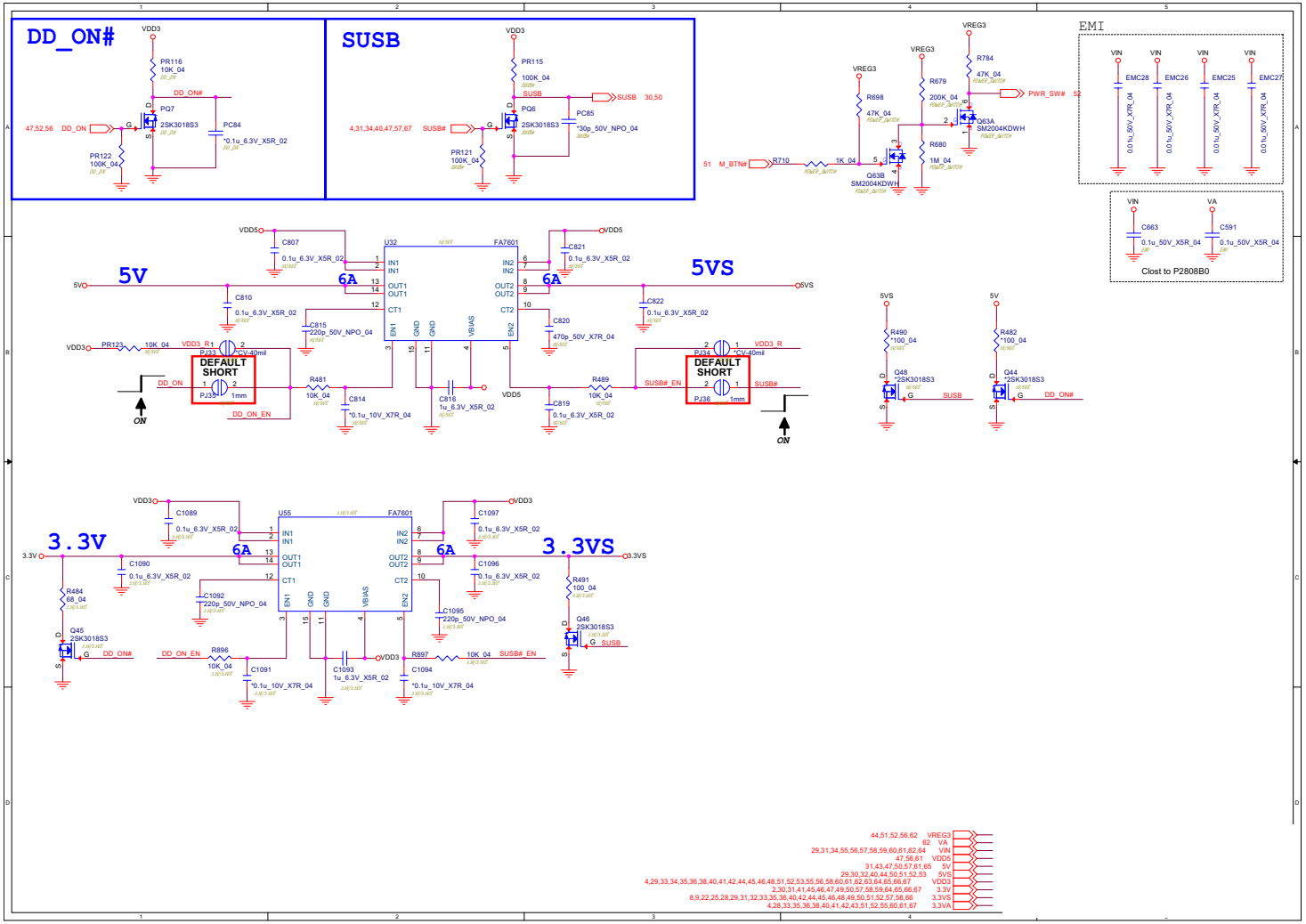

Sheet 52 of 69
5V, 5VS, 3.3V, 3.3VS

VCCST, VCCSTG, VCCSFR

Sheet 53 of 69
VCCST, VCCSTG, VCCSFR

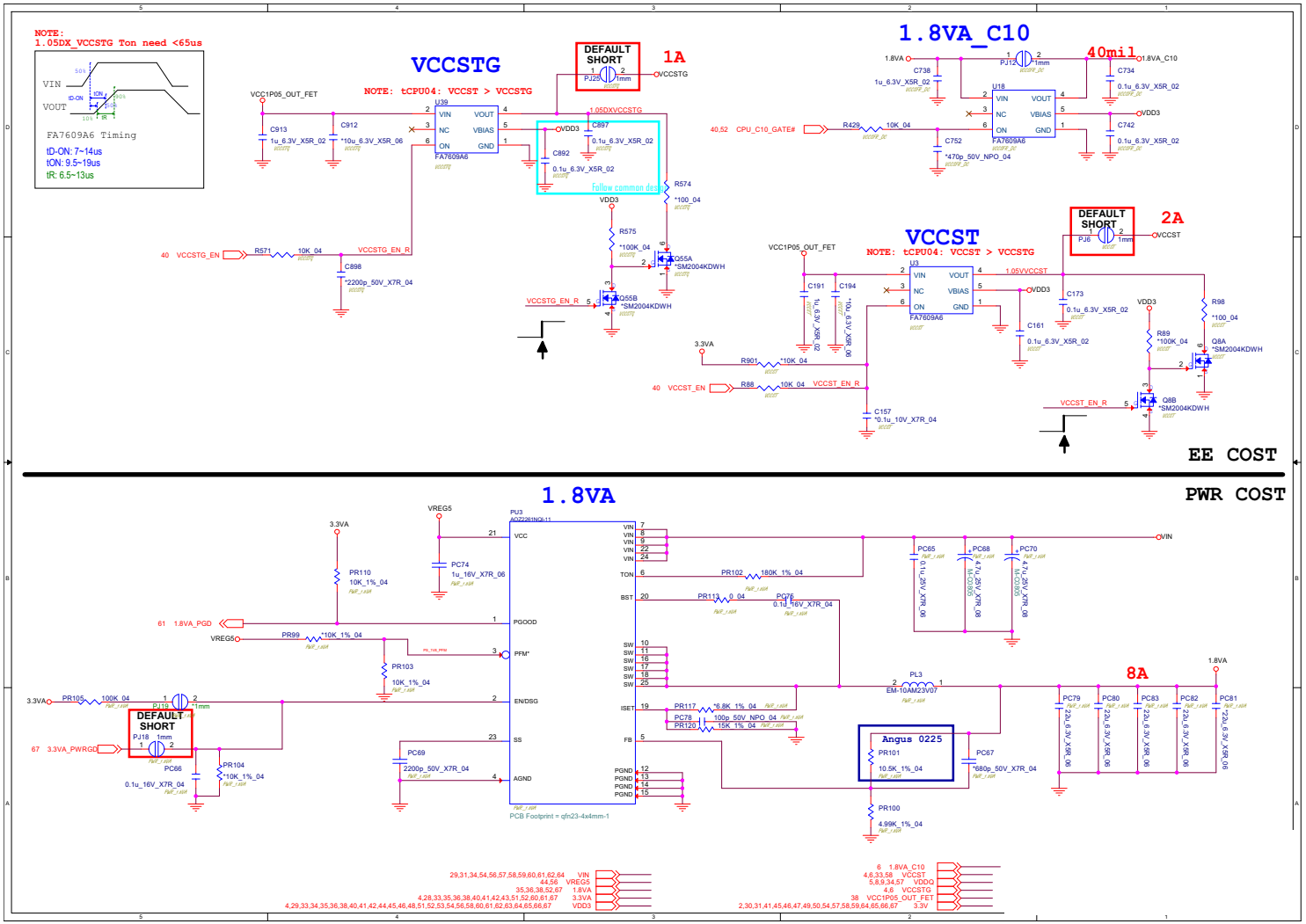

VDD3, VDD5

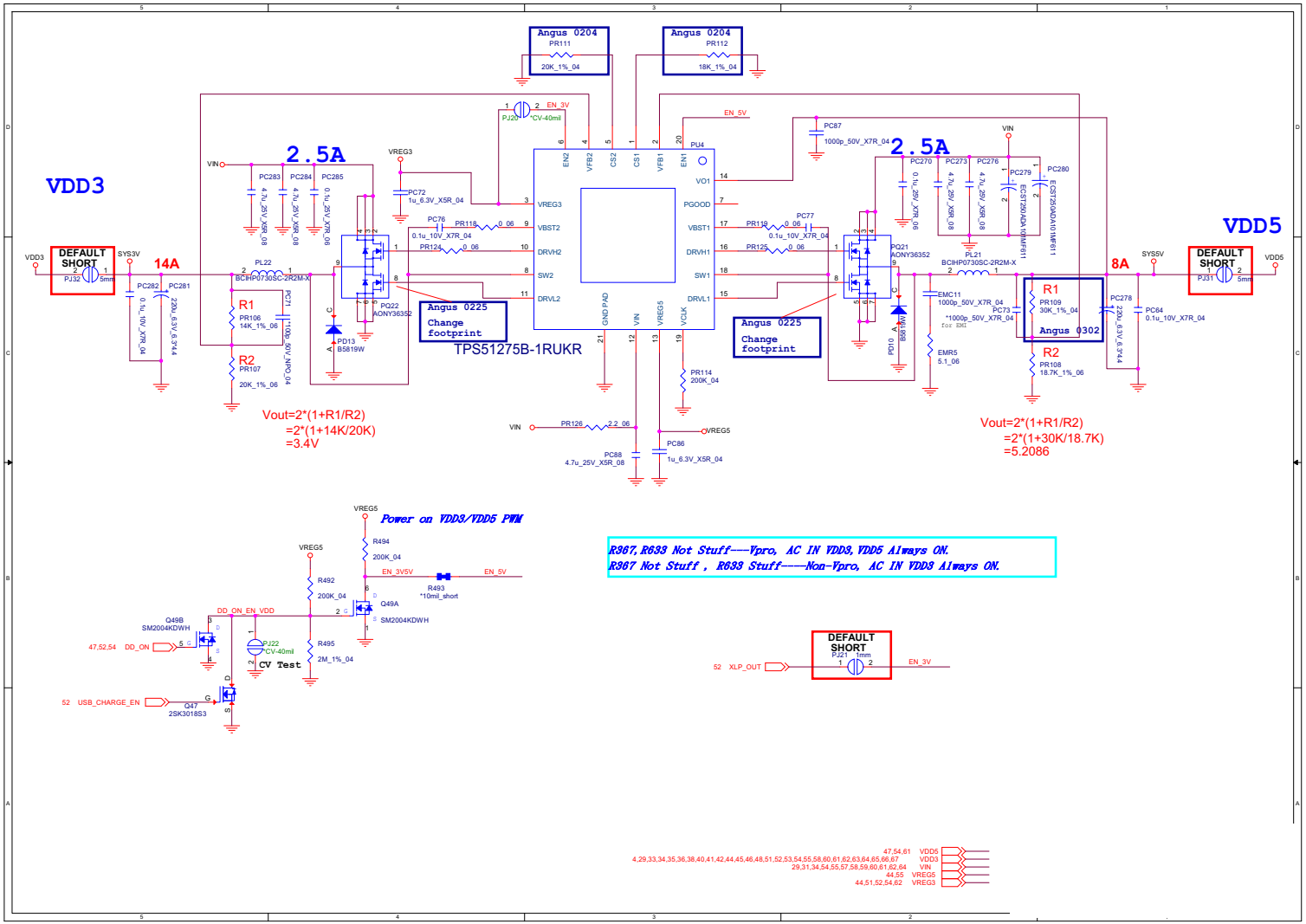

Sheet 54 of 69
VDD3, VDD5

DDR 1.2V / 0.6VS, 2.5V

Sheet 55 of 69
DDR 1.2V / 0.6VS, 2.5V

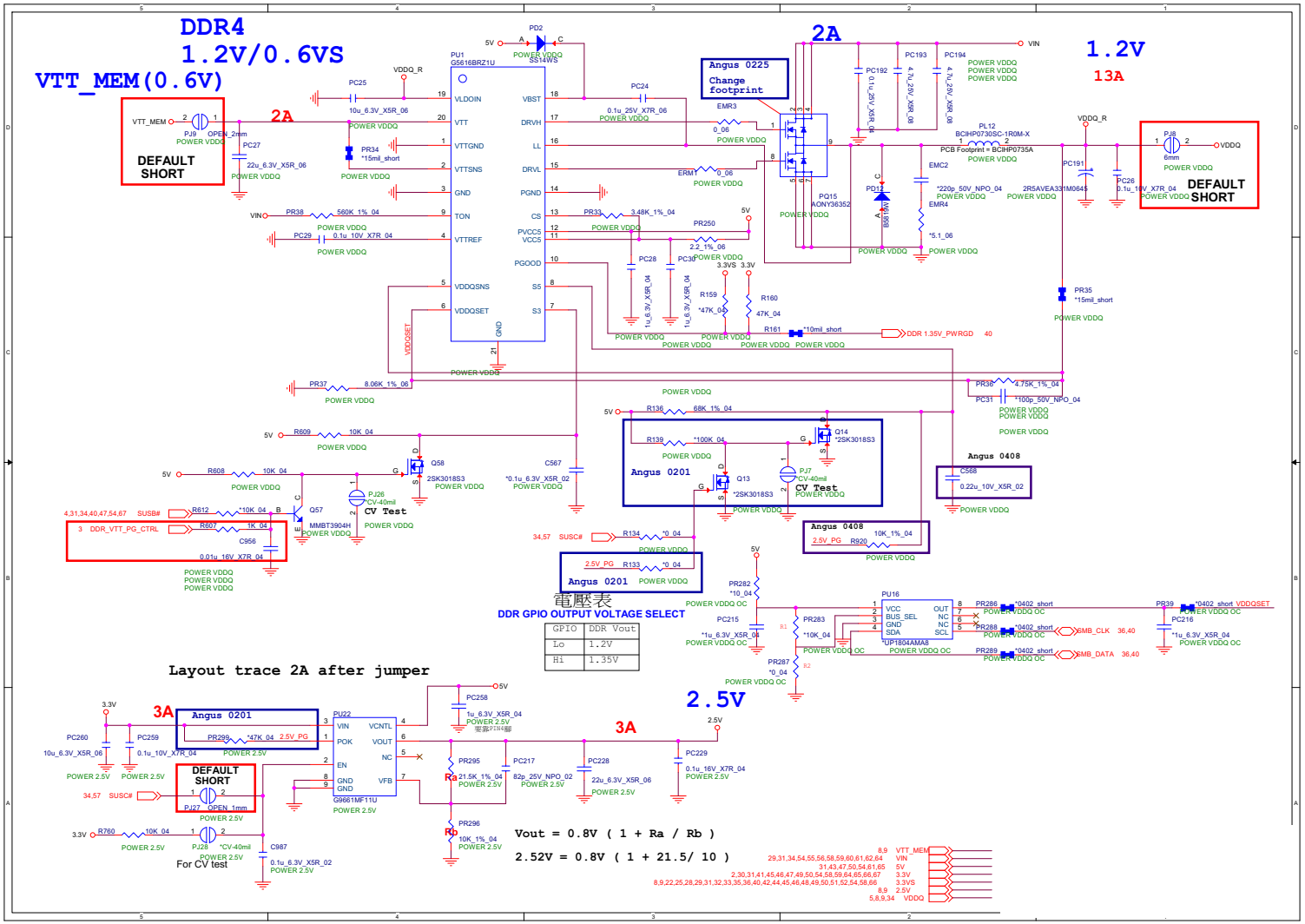

VCCIN

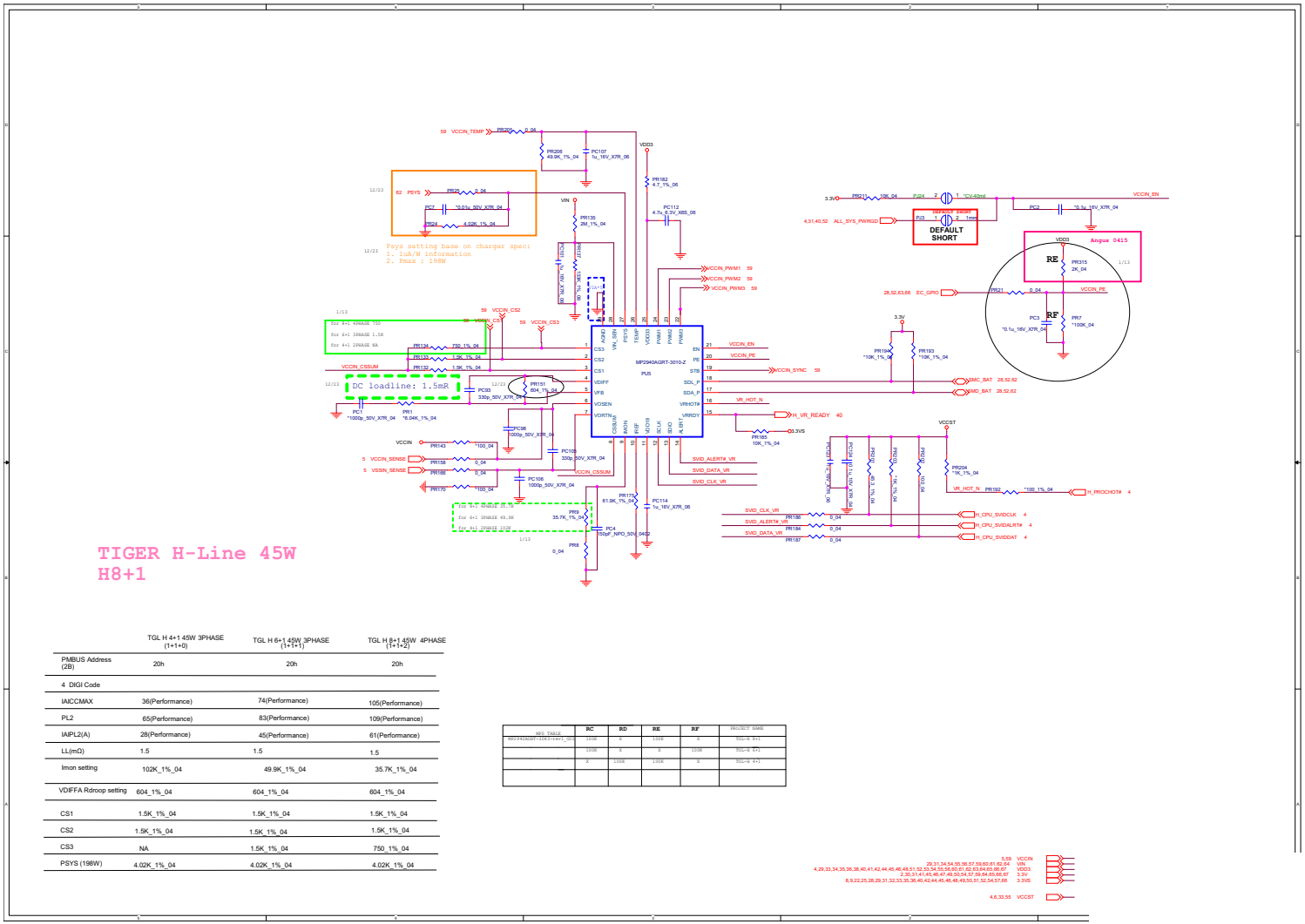

	TGL H 4+1 45W 3PHASE (1+1+0)	TGL H 6+1 45W 3PHASE (1+1+1)	TGL H 8+1 45W 4PHASE (1+1+2)
PMBUS Address (2B)	20h	20h	20h
4 DIGI Code			
IAICCMAX	36(Performance)	74(Performance)	105(Performance)
PL2	65(Performance)	83(Performance)	109(Performance)
IAIPL2(A)	28(Performance)	45(Performance)	61(Performance)
LL(mΩ)	1.5	1.5	1.5
Imon setting	102K_1%_04	49.9K_1%_04	35.7K_1%_04
VDIFFA Rdroop setting	604_1%_04	604_1%_04	604_1%_04
CS1	1.5K_1%_04	1.5K_1%_04	1.5K_1%_04
CS2	1.5K_1%_04	1.5K_1%_04	1.5K_1%_04
CS3	NA	1.5K_1%_04	750_1%_04
PSYS (198W)	4.02K_1%_04	4.02K_1%_04	4.02K_1%_04

MPS TABLE	RC	RD	RE	RF	PROJECT NAME
MP2940AGRT-3010-Z-001_001	100K	X	100K	X	TGL-H 8+1
	100K	X	X	100K	TGL-H 6+1
	X	100K	100K	X	TGL-H 4+1

Sheet 56 of 69
VCCIN

VCCIN Output

Sheet 57 of 69
VCCIN Output

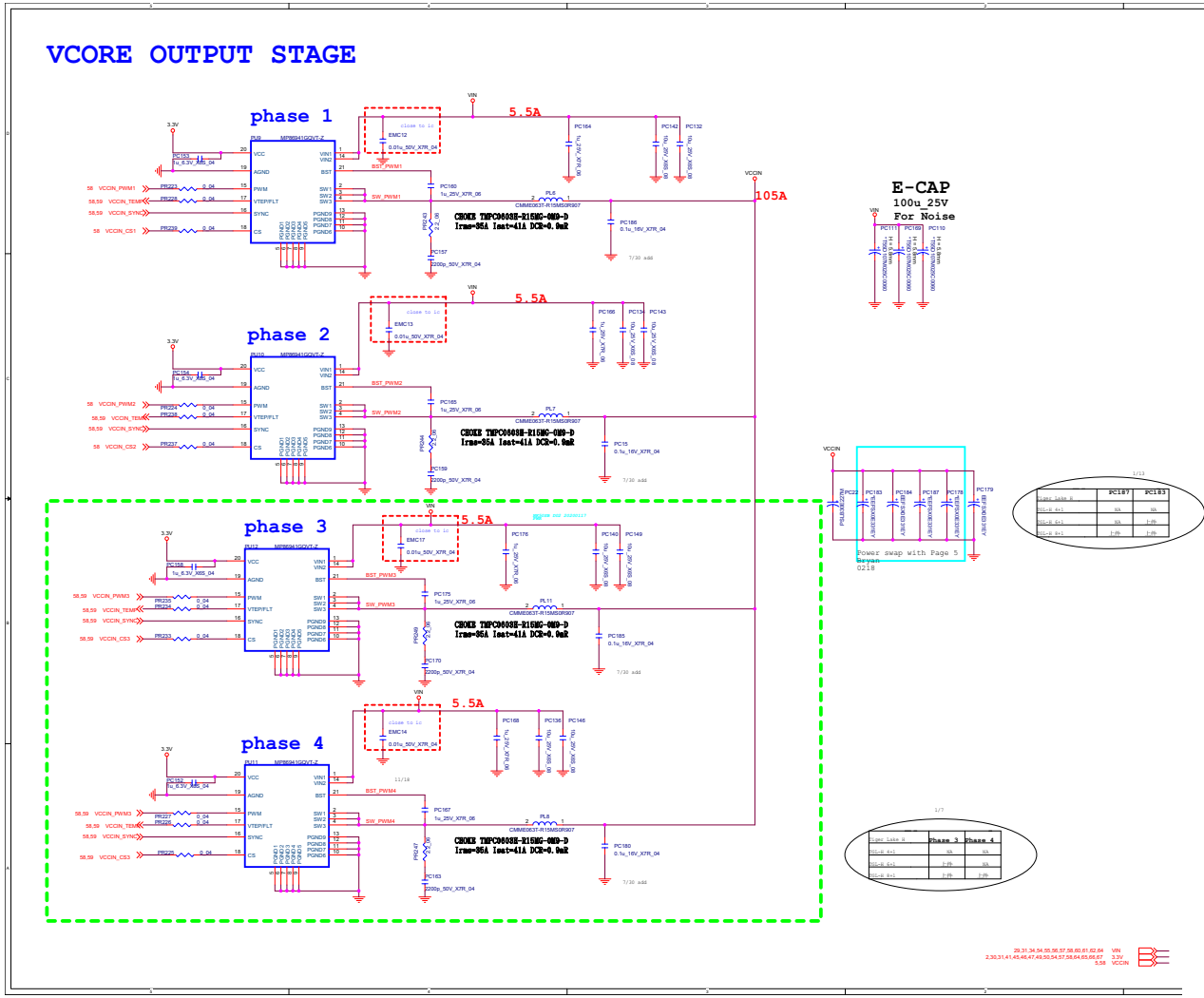

VNN / V1.05A

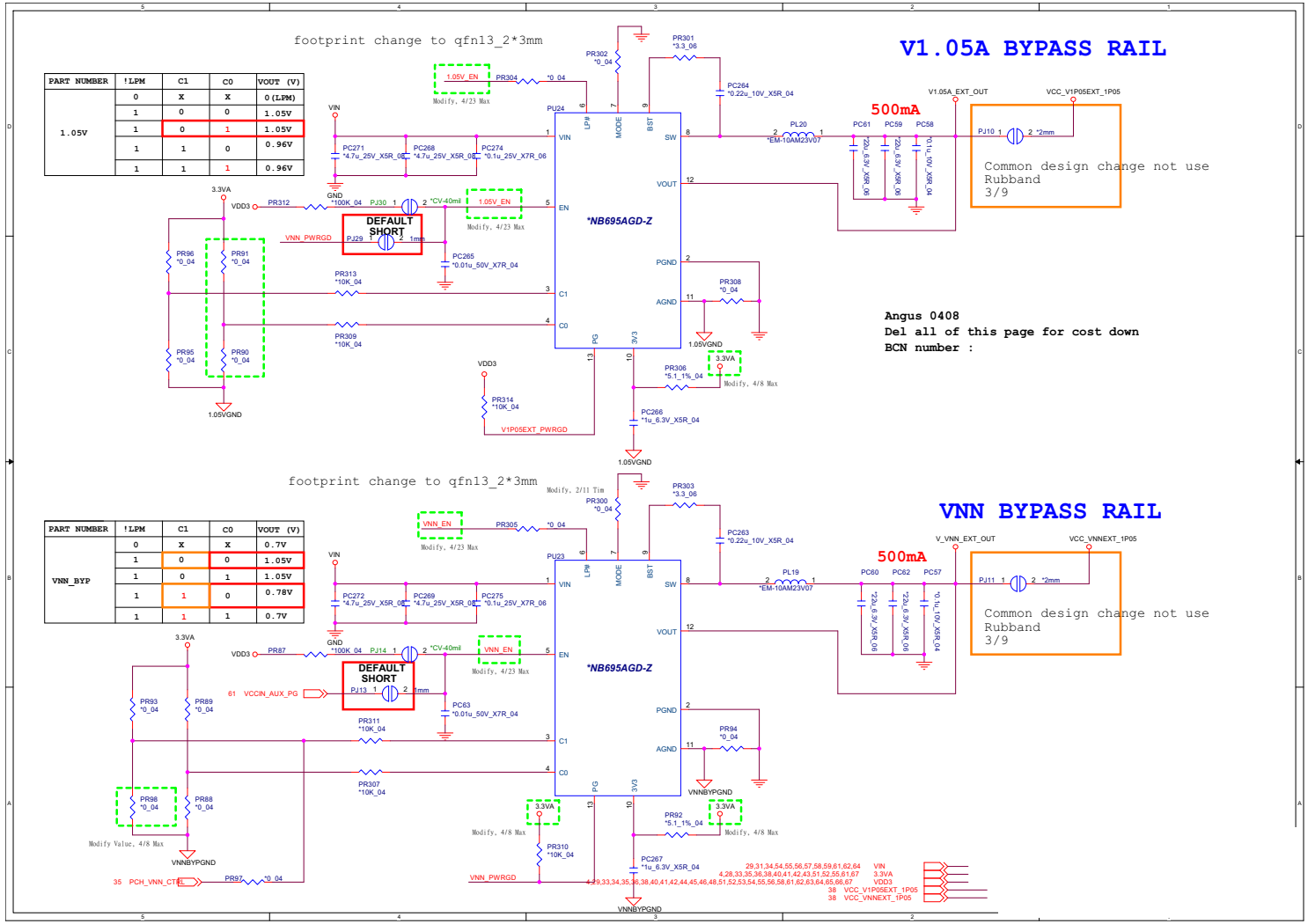

PART NUMBER	!LPM	C1	C0	VOUT (V)
1.05V	0	X	X	0 (LPM)
	1	0	0	1.05V
	1	0	1	1.05V
	1	1	0	0.96V
	1	1	1	0.96V

PART NUMBER	!LPM	C1	C0	VOUT (V)
VNN_BYP	0	X	X	0.7V
	1	0	0	1.05V
	1	0	1	1.05V
	1	1	0	0.78V
	1	1	1	0.7V

Sheet 58 of 69
VNN / V1.05A

B.Schematic Diagrams

VCCIN AUX

Sheet 59 of 69
VCCIN AUX

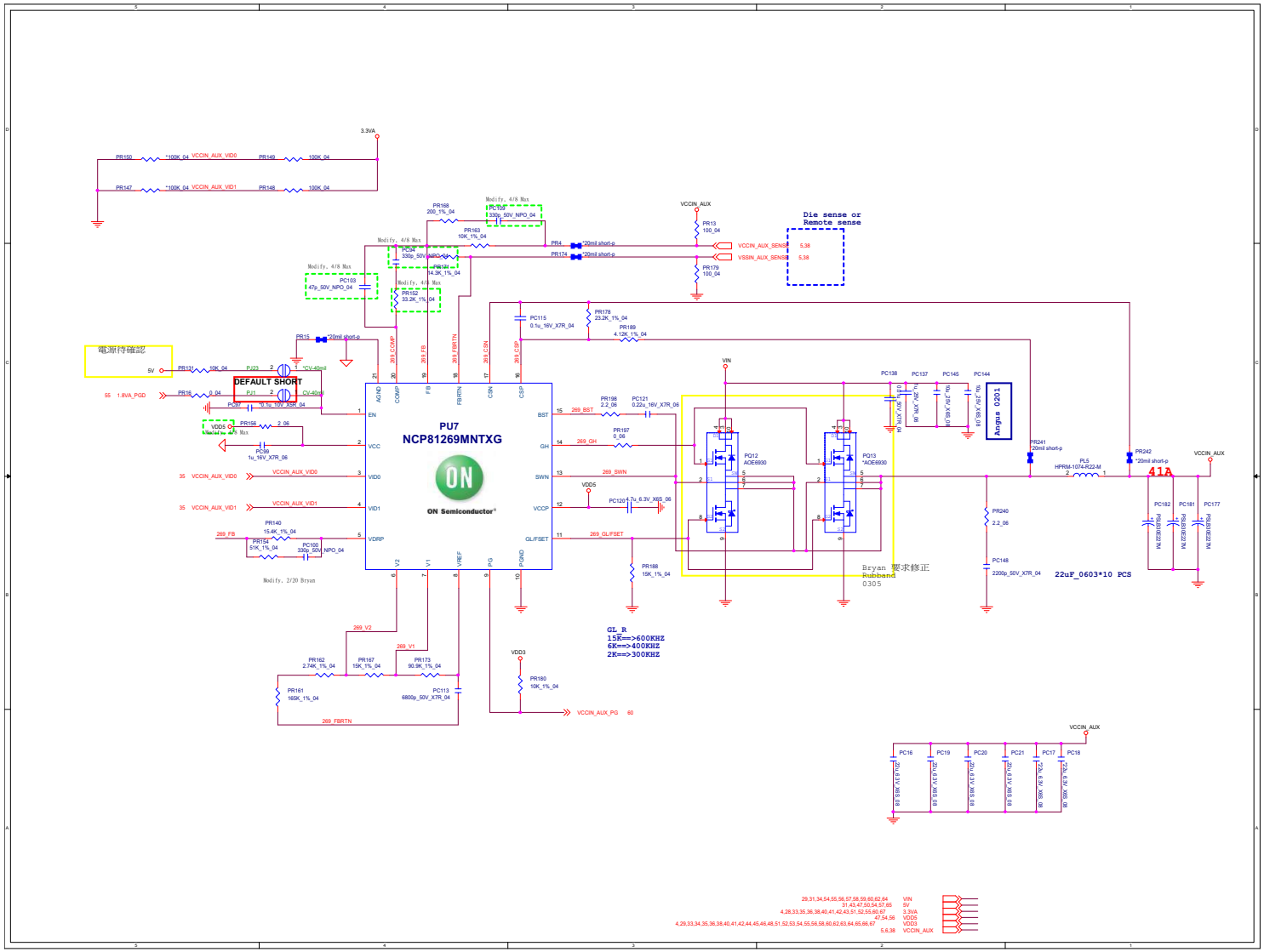

Charger

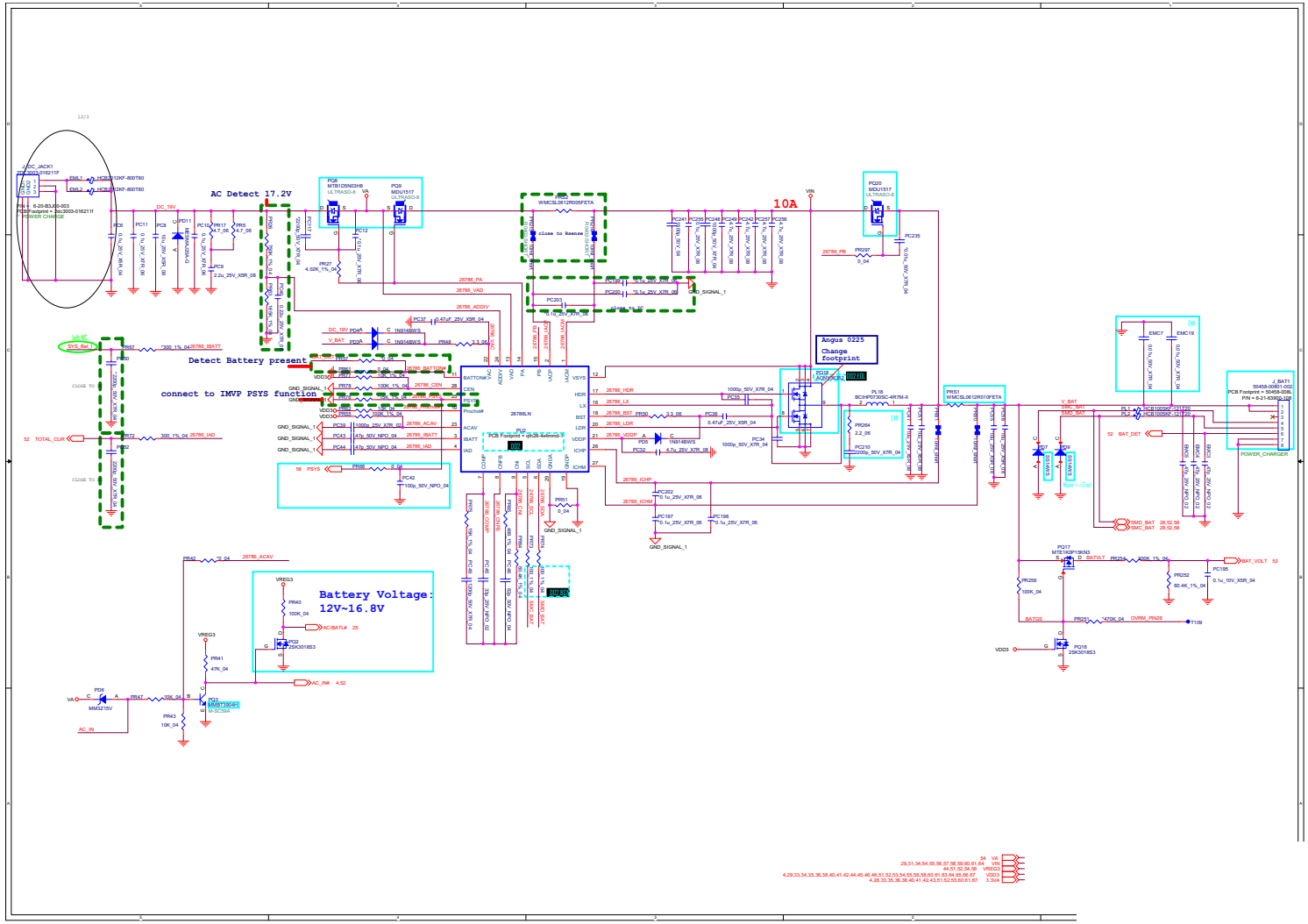

Sheet 60 of 69
Charger

NVVDD1

Sheet 61 of 69
NVVDD1

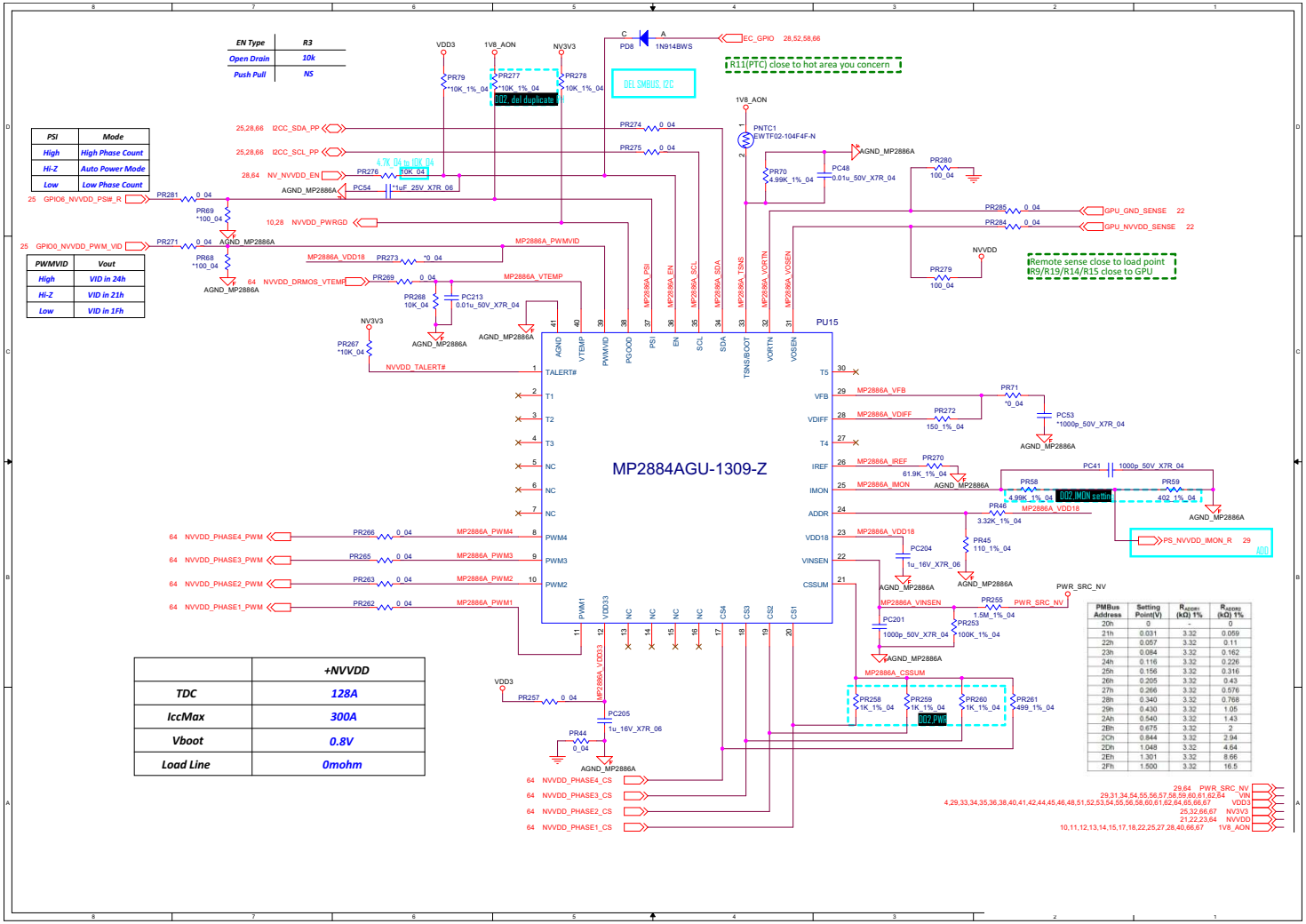

NVVDD2

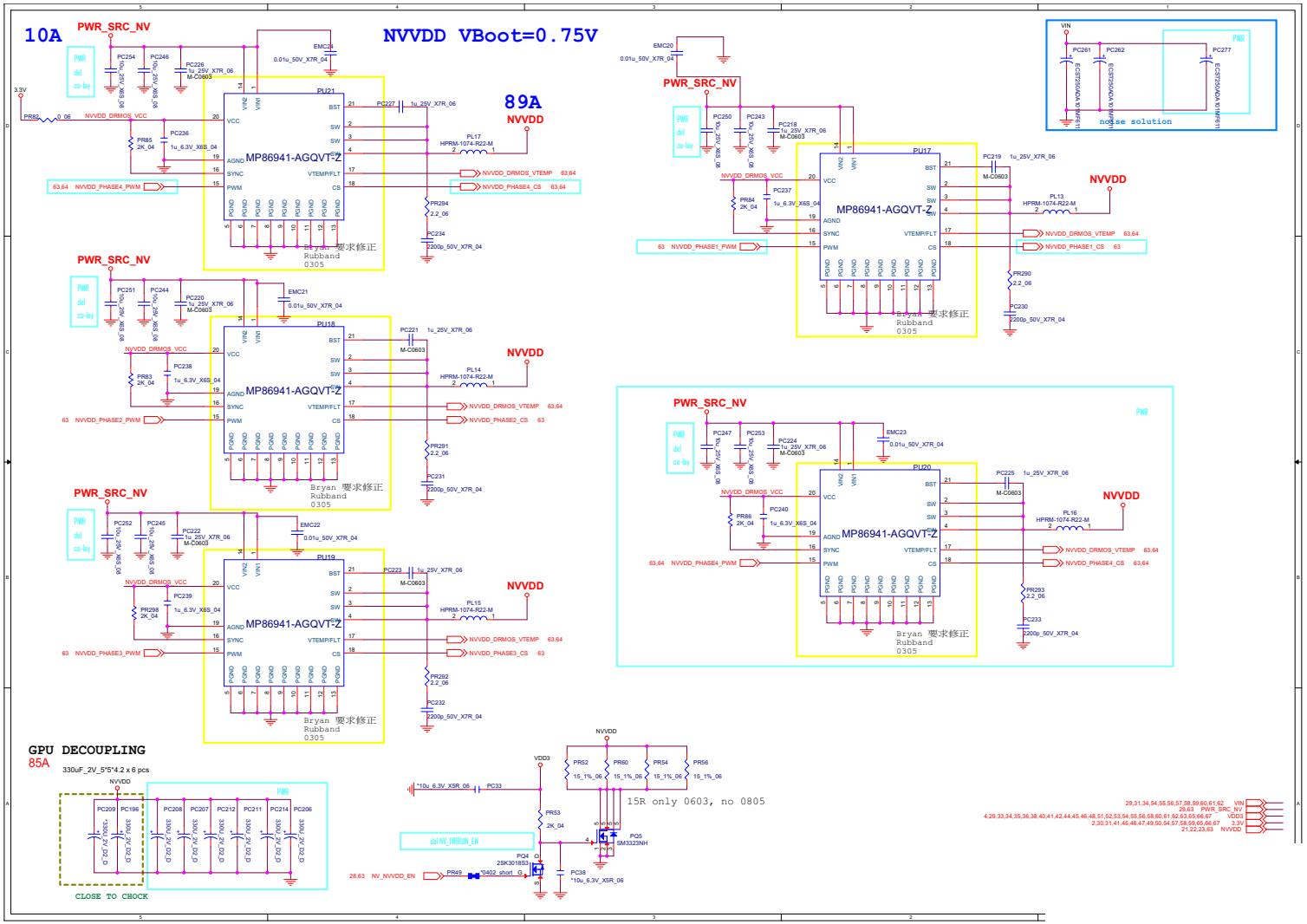

Sheet 62 of 69
NVVDD2

PEX_VDD

Sheet 63 of 69
PEX_VDD

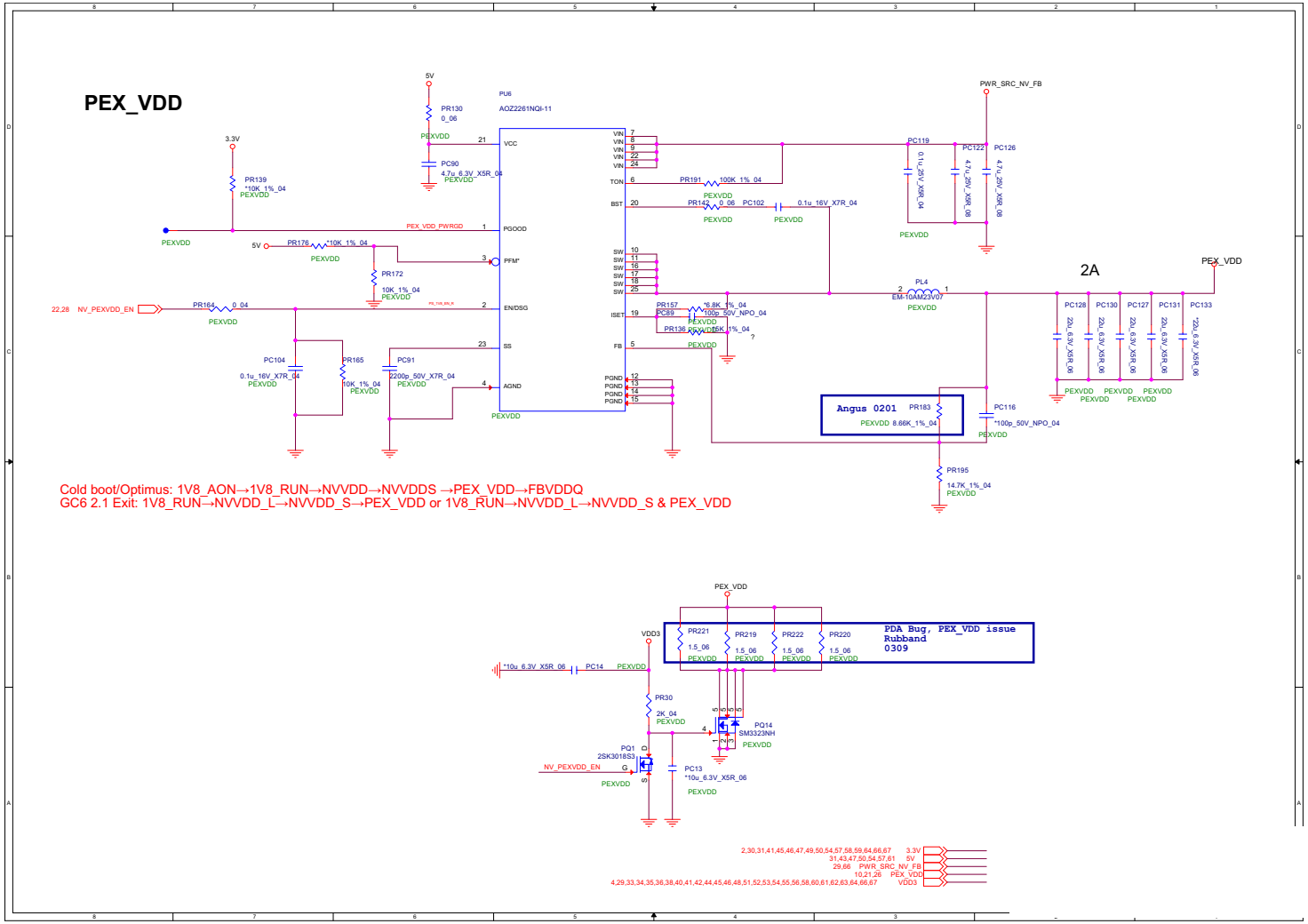

FBVDDQ

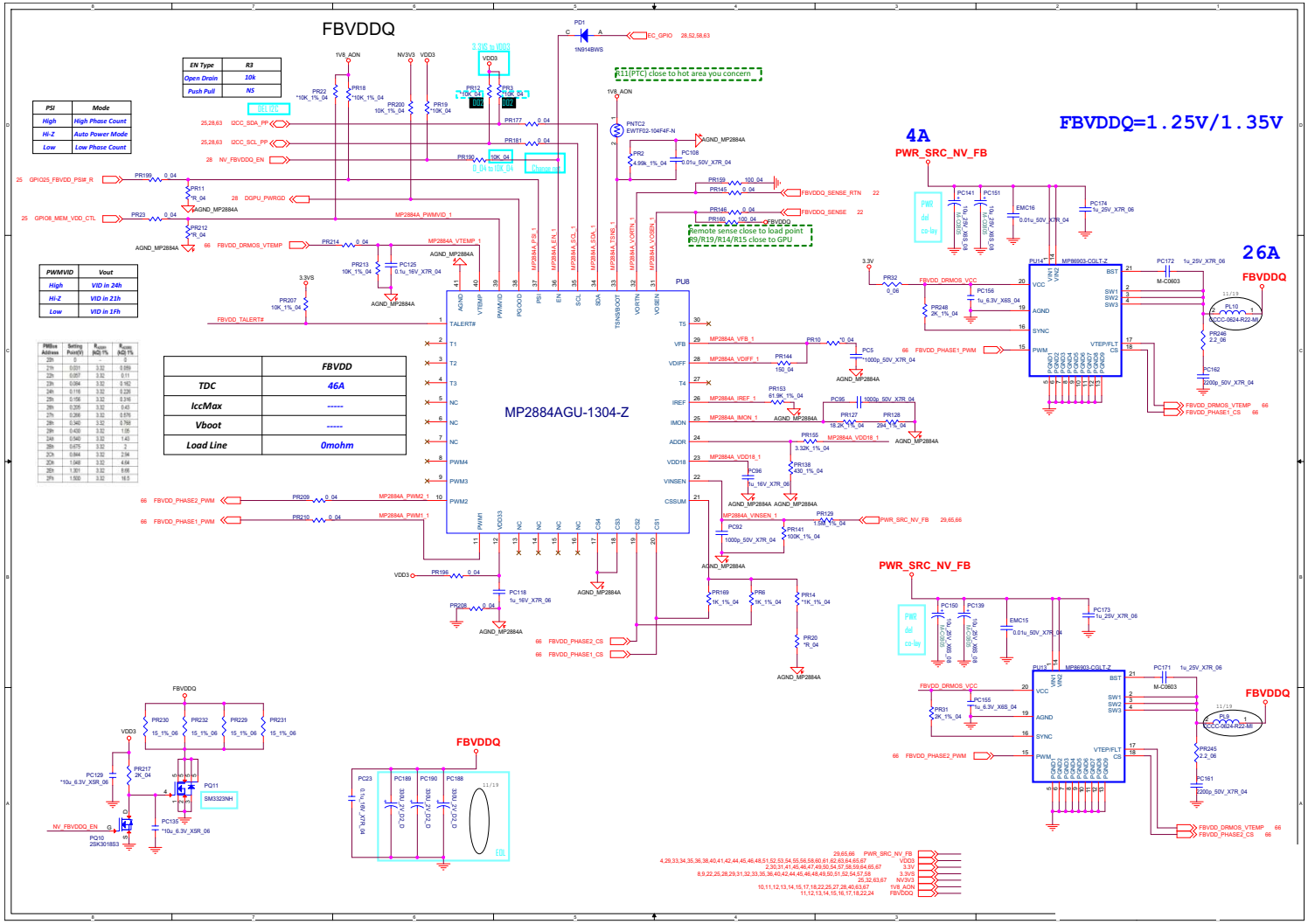

Sheet 64 of 69
FBVDDQ

1V8_AON, NV3V3, 3.3VA

Sheet 65 of 69
1V8_AON, NV3V3, 3.3VA

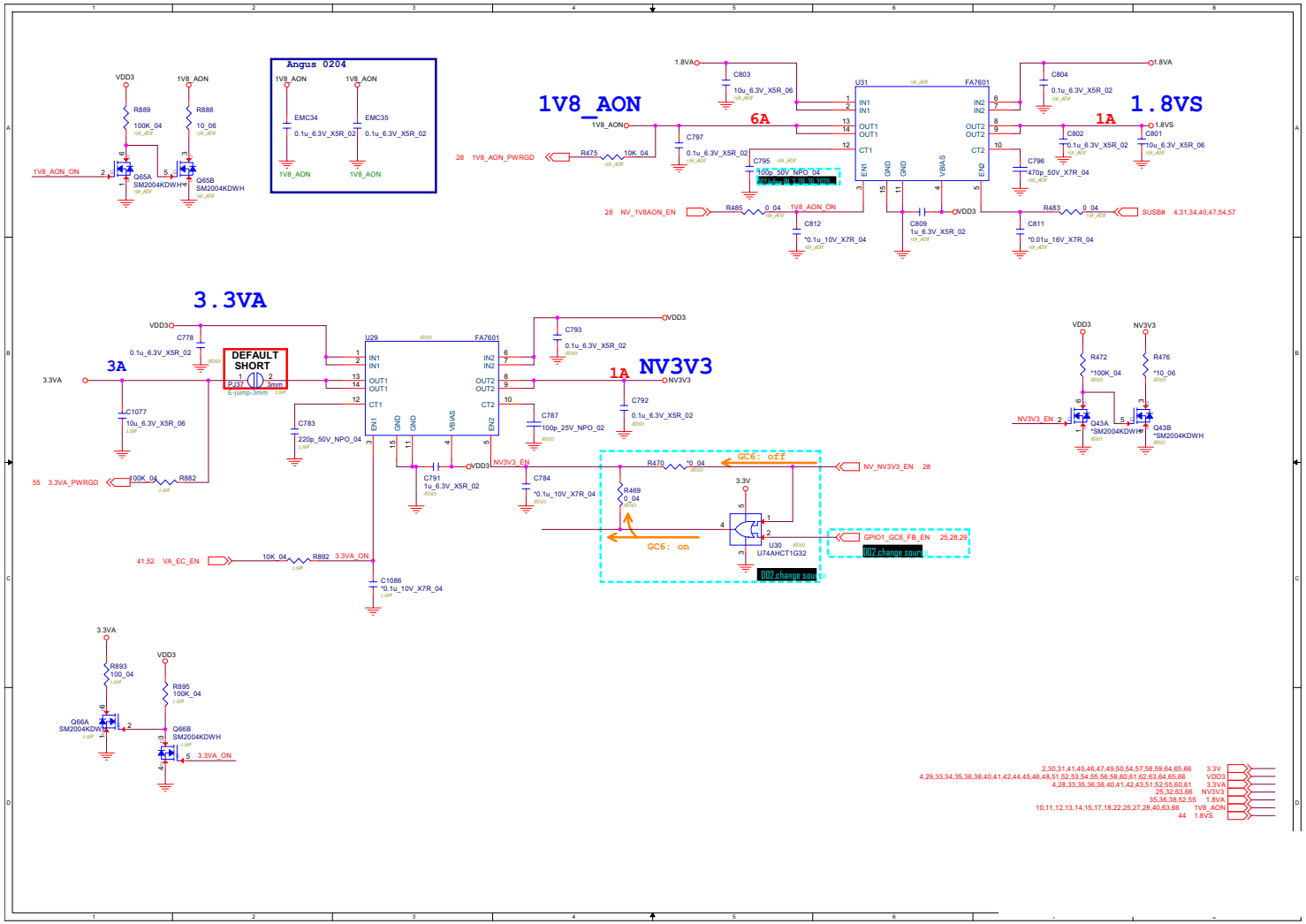

Audio Board + Redriver

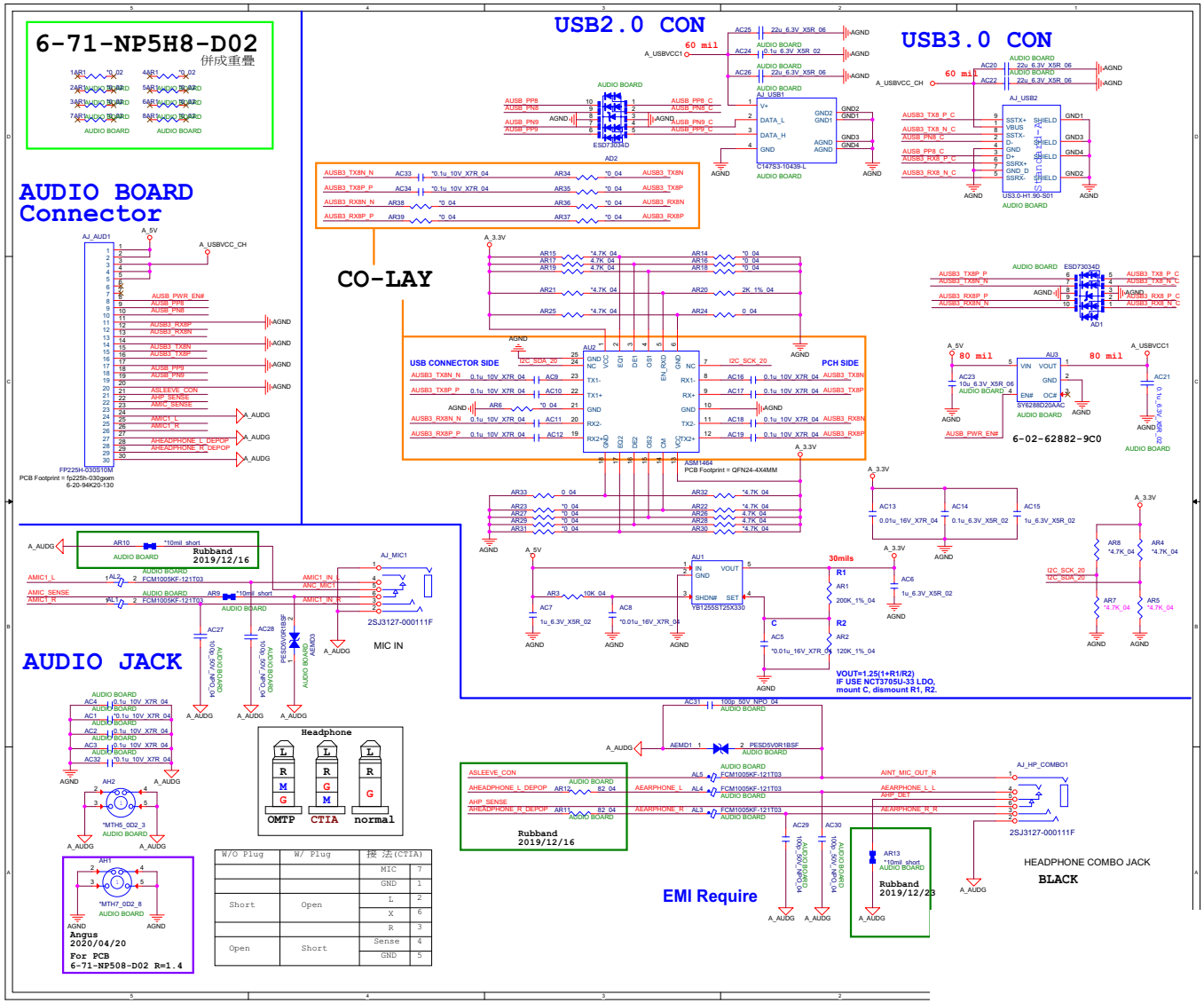

Sheet 66 of 69
Audio Board + Redriver

LED Board

Sheet 67 of 69
LED Board

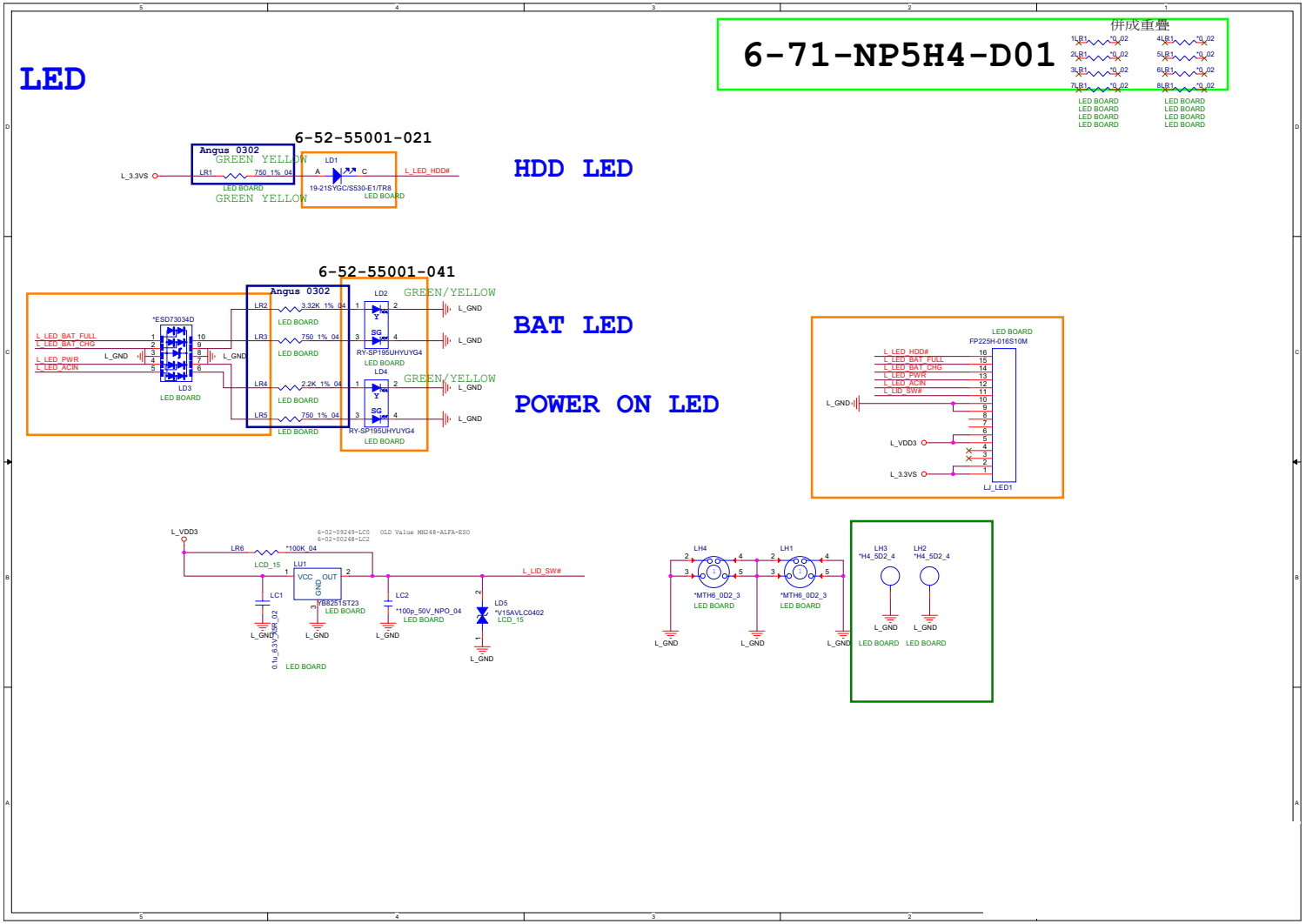

Power SW Board

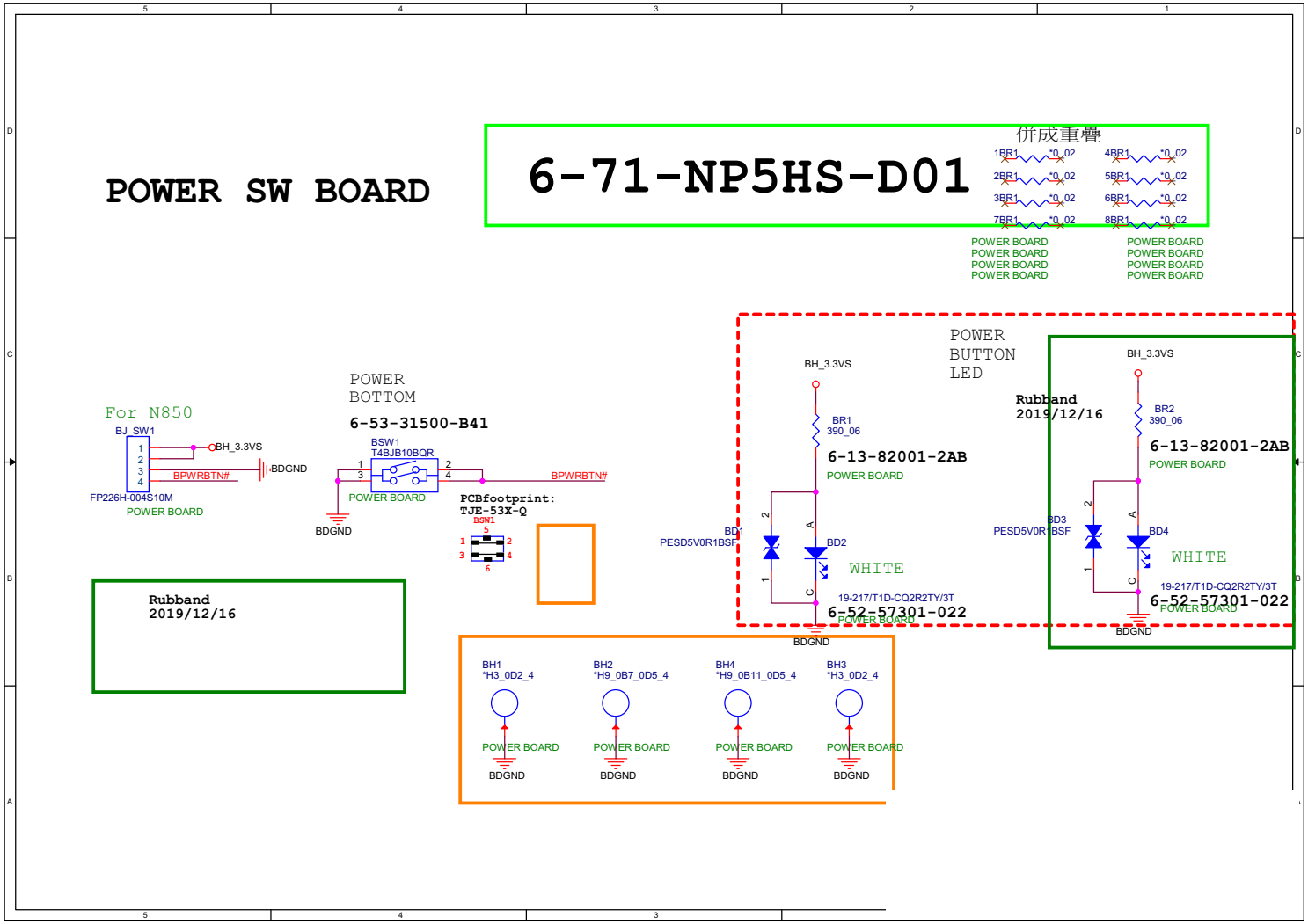

Sheet 68 of 69
Power SW Board

Power Sequence

Sheet 69 of 69
Power Sequence