# SERVICE MANUAL

**P650RP6(-G) / P651RP6(-G)**

notebook

# Notebook Computer

# P650RP6(-G) / P651RP6(-G)

# Service Manual

# Notice

The company reserves the right to revise this publication or to change its contents without notice. Information contained herein is for reference only and does not constitute a commitment on the part of the manufacturer or any subsequent vendor. They assume no responsibility or liability for any errors or inaccuracies that may appear in this publication nor are they in anyway responsible for any loss or damage resulting from the use (or misuse) of this publication.

This publication and any accompanying software may not, in whole or in part, be reproduced, translated, transmitted or reduced to any machine readable form without prior consent from the vendor, manufacturer or creators of this publication, except for copies kept by the user for backup purposes.

Brand and product names mentioned in this publication may or may not be copyrights and/or registered trademarks of their respective companies. They are mentioned for identification purposes only and are not intended as an endorsement of that product or its manufacturer.

Version 1.0
August 2016

## Trademarks

**Intel and Intel Core** are trademarks of Intel Corporation.
**Windows**® is a registered trademark of Microsoft Corporation.
Other brand and product names are trademarks and /or registered trademarks of their respective companies.

HDMI™
HIGH-DEFINITION MULTIMEDIA INTERFACE

## About this Manual

This manual is intended for service personnel who have completed sufficient training to undertake the maintenance and inspection of personal computers.

It is organized to allow you to look up basic information for servicing and/or upgrading components of the ***P650RP6(-G) / P651RP6(-G)*** series notebook PC.

The following information is included:

Chapter 1, Introduction, provides general information about the location of system elements and their specifications.
Chapter 2, Disassembly, provides step-by-step instructions for disassembling parts and subsystems and how to upgrade elements of the system.

Appendix A, Part Lists
Appendix B, Schematic Diagrams
Appendix C, Updating the FLASH ROM BIOS

## IMPORTANT SAFETY INSTRUCTIONS

Follow basic safety precautions, including those listed below, to reduce the risk of fire, electric shock and injury to persons when using any electrical equipment:

1. Do not use this product near water, for example near a bath tub, wash bowl, kitchen sink or laundry tub, in a wet basement or near a swimming pool.
2. Avoid using a telephone (other than a cordless type) during an electrical storm. There may be a remote risk of electrical shock from lightning.
3. Do not use the telephone to report a gas leak in the vicinity of the leak.
4. Use only the power cord and batteries indicated in this manual. Do not dispose of batteries in a fire. They may explode. Check with local codes for possible special disposal instructions.
5. This product is intended to be supplied by a Listed Power Unit as follows:

- AC Input of 100 - 240V, 50 - 60Hz, DC Output of 19V, 10.5A (**200** Watts) minimum AC/DC Adapter.



### FCC Statement

This device complies with Part 15 of the FCC Rules. Operation is subject to the following two conditions:
This device may not cause harmful interference.
This device must accept any interference received, including interference that may cause undesired operation.

## Instructions for Care and Operation

The notebook computer is quite rugged, but it can be damaged. To prevent this, follow these suggestions:

1. **Don't drop it, or expose it to shock.** If the computer falls, the case and the components could be damaged.

| | | |
|---|---|---|
| *Do not expose the computer to any shock or vibration.* 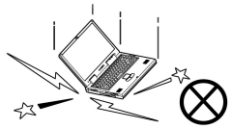 | *Do not place it on an unstable surface.* 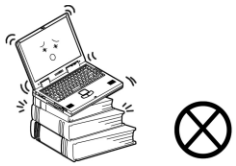 | *Do not place anything heavy on the computer.* 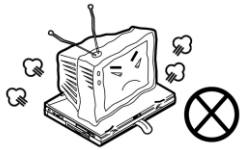 |

2. **Keep it dry, and don't overheat it.** Keep the computer and power supply away from any kind of heating element. This is an electrical appliance. If water or any other liquid gets into it, the computer could be badly damaged.

| | | | |
|---|---|---|---|
| *Do not expose it to excessive heat or direct sunlight.* | *Do not leave it in a place where foreign matter or moisture may affect the system.* | *Don't use or store the computer in a humid environment.* 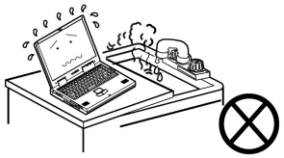 | *Do not place the computer on any surface which will block the vents.* 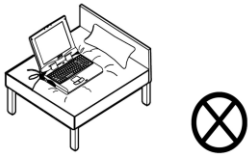 |

3. **Follow the proper working procedures for the computer**. Shut the computer down properly and don't forget to save your work. Remember to periodically save your data as data may be lost if the battery is depleted.

| | | | |
|---|---|---|---|
| *Do not turn off the power until you properly shut down all programs.* 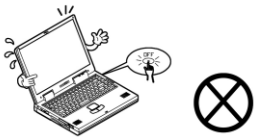 | *Do not turn off any peripheral devices when the computer is on.* 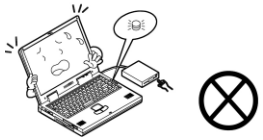 | *Do not disassemble the computer by yourself.* | *Perform routine maintenance on your computer.* |

4. **Avoid interference.** Keep the computer away from high capacity transformers, electric motors, and other strong magnetic fields. These can hinder proper performance and damage your data.
5. **Take care when using peripheral devices**.

| | |
|---|---|
| *Use only approved brands of peripherals.* 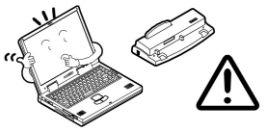 | *Unplug the power cord before attaching peripheral devices.* 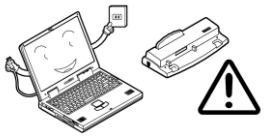 |

## Power Safety

The computer has specific power requirements:

- Only use a power adapter approved for use with this computer.
- Your AC adapter may be designed for international travel but it still requires a steady, uninterrupted power supply. If you are unsure of your local power specifications, consult your service representative or local power company.
- The power adapter may have either a 2-prong or a 3-prong grounded plug. The third prong is an important safety feature; do not defeat its purpose. If you do not have access to a compatible outlet, have a qualified electrician install one.
- When you want to unplug the power cord, be sure to disconnect it by the plug head, not by its wire.
- Make sure the socket and any extension cord(s) you use can support the total current load of all the connected devices.
- Before cleaning the computer, make sure it is disconnected from any external power supplies.

**Power Safety Warning**

Before you undertake any upgrade procedures, make sure that you have turned off the power, and disconnected all peripherals and cables (including telephone lines and power cord). It is advisable to also remove your battery in order to prevent accidentally turning the machine on.

| | | |
|---|---|---|
| *Do not plug in the power cord if you are wet.* | *Do not use the power cord if it is broken.* 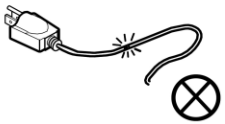 | *Do not place heavy objects on the power cord.* 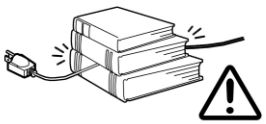 |

## Battery Precautions

- Only use batteries designed for this computer. The wrong battery type may explode, leak or damage the computer.
- Do not continue to use a battery that has been dropped, or that appears damaged (e.g. bent or twisted) in any way. Even if the computer continues to work with a damaged battery in place, it may cause circuit damage, which may possibly result in fire.
- Recharge the batteries using the notebook's system. Incorrect recharging may make the battery explode.
- Do not try to repair a battery pack. Refer any battery pack repair or replacement to your service representative or qualified service personnel.
- Keep children away from, and promptly dispose of a damaged battery. Always dispose of batteries carefully. Batteries may explode or leak if exposed to fire, or improperly handled or discarded.
- Keep the battery away from metal appliances.
- Affix tape to the battery contacts before disposing of the battery.
- Do not touch the battery contacts with your hands or metal objects.

## Battery Guidelines

The following can also apply to any backup batteries you may have.

- If you do not use the battery for an extended period, then remove the battery from the computer for storage.
- Before removing the battery for storage charge it to 60% - 70%.
- Check stored batteries at least every 3 months and charge them to 60% - 70%.

**Battery Disposal**

The product that you have purchased contains a rechargeable battery. The battery is recyclable. At the end of its useful life, under various state and local laws, it may be illegal to dispose of this battery into the municipal waste stream. Check with your local solid waste officials for details in your area for recycling options or proper disposal.

**Caution**

Danger of explosion if battery is incorrectly replaced. Replace only with the same or equivalent type recommended by the manufacturer. Discard used battery according to the manufacturer's instructions.

**Battery Level**

Click the battery icon in the taskbar to see the current battery level and charge status. A battery that drops below a level of 10% will not allow the computer to boot up. Make sure that any battery that drops below 10% is recharged within one week.

## Related Documents

You may also need to consult the following manual for additional information:

User's Manual on CD/DVD

This describes the notebook PC's features and the procedures for operating the computer and its ROM-based setup program. It also describes the installation and operation of the utility programs provided with the notebook PC.

# System Startup

1. Remove all packing materials.
2. Place the computer on a stable surface.
3. Insert the battery and make sure it is locked in position.
4. Securely attach any peripherals you want to use with the computer (e.g. keyboard and mouse) to their ports.
5. Attach the AC/DC adapter to the DC-In jack at the rear of the computer, then plug the AC power cord into an outlet, and connect the AC power cord to the AC/DC adapter.
6. Use one hand to raise the lid/LCD to a comfortable viewing angle (do not exceed 135 degrees); use the other hand (as illustrated in Figure 1) to support the base of the computer (**Note**: **Never** lift the computer by the lid/LCD).
7. Press the power button to turn the computer "on".

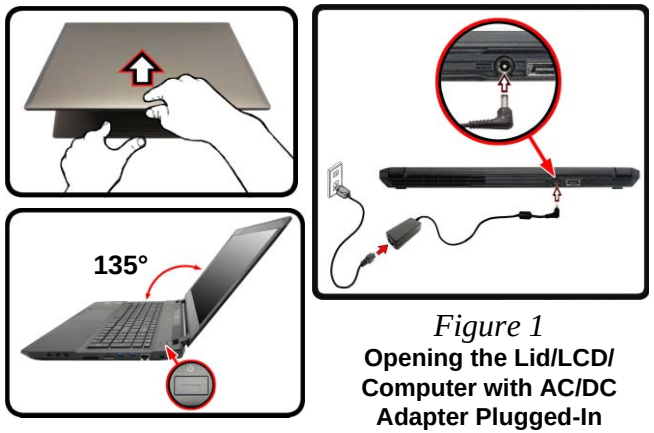


*Figure 1*
**Opening the Lid/LCD/ Computer with AC/DC Adapter Plugged-In**

**Shut Down**

Note that you should always shut your computer down by choosing the **Shut down** command in ***Windows*** (see below). This will help prevent hard disk or system problems.

Click the icon in the **Start Screen** and choose **Shut down** from the menu.

**Or**

Right-click the **Start button** at the bottom of the **Start Screen** or the **Desktop** and choose **Shut down or sign out > Shut down** from the context menu.

# Contents


## Introduction .....1-1

Overview .....1-1
Specifications .....1-2
External Locator - Top View with LCD Panel Open .....1-4
External Locator - Front & Right Side Views .....1-5
External Locator - Left Side & Rear View .....1-6
External Locator - Bottom View .....1-7
Mainboard Overview - Top (Key Parts) .....1-8
Mainboard Overview - Bottom (Key Parts) .....1-9
Mainboard Overview - Top (Connectors) .....1-10
Mainboard Overview - Bottom (Connectors) .....1-11

## Disassembly .....2-1

Overview .....2-1
Maintenance Tools .....2-2
Connections .....2-2
Maintenance Precautions .....2-3
Disassembly Steps .....2-4
Removing the Keyboard .....2-5
Removing the Battery .....2-6
Removing the Hard Disk Drive .....2-8
Removing the System Memory (RAM) .....2-10
Removing and Installing the M.2 SSD Module .....2-13
Removing the Wireless LAN Module .....2-16
Wireless LAN, Combo, 3G & LTE Module Cables .....2-17
Removing the 3G/4G Module .....2-17

## Part Lists .....A-1

Part List Illustration Location .....A-2
Top .....A-3
Bottom .....A-4
Main Board .....A-5
HDD .....A-6
LCD .....A-7
LCD (Sharp) .....A-8

## Schematic Diagrams.....B-1

System Block Diagram .....B-2
Processor 1/7 .....B-3
Processor 2/7 .....B-4
Processor 3/7 .....B-5
Processor 4/7 .....B-6
Processor 5/7 .....B-7
Processor 6/7 .....B-8
Processor 7/7 .....B-9
DDR CHA SO-DIMM_0 .....B-10
DDR CHA SO-DIMM_1 .....B-11
DDR CHB SO-DIMM_0 .....B-12
DDR CHB SO-DIMM_1 .....B-13
Panel, Inverter .....B-14
Redriver .....B-15
Mini DP Port E .....B-16
Mini DP Port F .....B-17
HDMI Connector .....B-18
VGA PCI Express .....B-19
VGA Frame Buffer Partition .....B-20
Frame Buffer Partition A .....B-21
Frame Buffer Partition B .....B-22
Frame Buffer Partition A_B .....B-23
GPU Frame Buffer Partition .....B-24
Frame Buffer Partition C .....B-25
Frame Buffer Partition C_D .....B-26

GPU Decoupling ..... B-27
GPU Decoupling 2 ..... B-28
Straps and XTAL ..... B-29
IFP I/O Interface ..... B-30
Misc - GPIO, I2C and ROM ..... B-31
NVIDIA Power Sequence ..... B-32
GPU NVVDD, FBVDDQ ..... B-33
GPU GND ..... B-34
PCH 1/9 ..... B-35
PCH 2/9 ..... B-36
PCH 3/9 ..... B-37
PCH 4/9 ..... B-38
PCH 5/9 ..... B-39
PCH 6/9 ..... B-40
PCH 7/9 ..... B-41
PCH 8/9 ..... B-42
PCH 9/9 ..... B-43
KBC IT8587 ..... B-44
USB Charger ..... B-45
USB ..... B-46
M.2 WLAN+BT, PCIE4X SSD ..... B-47
M.2 3G/LTE ..... B-48
Realtek ALC892 ..... B-49
TPA2008D2 ..... B-50
TPM, CCD, TP ..... B-51
Fan, LID, KB LED ..... B-52
Connector ..... B-53
DDR 1.2V / 0.6VS ..... B-54
VDD3, VDD5 ..... B-55
5V, 5VS, 3.3V, 3.3VS, 3.3VA ..... B-56
Power 1.0V, VCCIO ..... B-57
AC_In, Charger ..... B-58
1.0DX_VCCSTG/VCCSFR_OC/2.5V ..... B-59
1V8_RUN/AON, NV3V3 ..... B-60
NVVDD Phase 1 & 2 ..... B-61
NVVDDS ..... B-62
PEX_VDD ..... B-63
FBVDDQ ..... B-64
VCC_Core & VCCSA ..... B-65
VCore Output Stage ..... B-66
VCCGT ..... B-67
VCCGT Output Stage ..... B-68
LAN RTL8411, Card Reader ..... B-69
AR_TBT ..... B-70
AR_Power ..... B-71
TPS65982, Type C ..... B-72
TPS65982, Type A ..... B-73
USB, Type A ..... B-74
Audio Board_3D AMP ..... B-75
HDD Board ..... B-76
Power Board ..... B-77
LED Board ..... B-78
Click Board ..... B-79
Finger Sensor Board ..... B-80
Power Board ..... B-81
LED Board ..... B-82

**pdating the FLASH ROM BIOS..... C-1**

Download the BIOS ..... C-1
Unzip the downloaded files to a bootable CD/DVD or
USB Flash drive ..... C-1
Set the computer to boot from the external drive ..... C-1
Use the flash tools to update the BIOS ..... C-2
Restart the computer (booting from the HDD) ..... C-2

# Chapter 1: Introduction

## Overview

This manual covers the information you need to service or upgrade the ***P650RP6(-G) / P651RP6(-G)*** series notebook computer. Information about operating the computer (e.g. getting started, and the *Setup* utility) is in the *User's Manual*. Information about dri-vers (e.g. VGA & audio) is also found in the *User's Manual*. The manual is shipped with the computer.

Operating systems (e.g. *Windows 8.1*, etc.) have their own manuals as do application softwares (e.g. word processing and database programs). If you have questions about those programs, you should consult those manuals.

The ***P650RP6(-G) / P651RP6(-G)*** series notebook is designed to be upgradeable. See ***Disassembly on page 2 - 1*** for a detailed description of the upgrade procedures for each specific component. Please take note of the warning and safety information indicated by the "" symbol.

The balance of this chapter reviews the computer's technical specifications and features.

# Specifications

**Latest Specification Information**

The specifications listed here are correct at the time of sending them to the press. Certain items (particularly processor types/speeds) may be changed, delayed or updated due to the manufacturer's release schedule. Check with your service center for more details.

**CPU Speed & Computer in DC Mode**

Note that when the computer is in DC mode (powered by the battery only) the CPU may not run at full speed. This is a design feature implemented in order to protect the battery.

## Processor Options

**i7-6820HK (2.70GHz), i7-6700HQ (2.60GHz)**

8MB Smart Cache, **14nm**, DDR4-2133MHz, TDP 45W

*Supports Intel® CPU over-clocking technology on i7-6820HK*

## Core Logic

Intel® HM170 Express Chipset

## LCD Options

15.6" (39.62cm), 16:9, QFHD (3840x2160)/FHD (1920x1080)

## BIOS

AMI BIOS (64Mb SPI Flash-ROM)

## Memory

Four 260 Pin SO-DIMM Sockets Supporting **DDR4 2133/ 2400MHz** Memory

Memory Expandable from **8GB** (**minimum**) up to **64GB** (**maximum**)

*Supports XMP 2666MHz (XMP support depends on processor)*

**SO-DIMM Memory Types**

All SO-DIMM memory modules installed in the system should be identical (the same size and brand) in order to prevent unexpected system behavior.

Do not mix SO-DIMM memory module sizes and brands otherwise unexpected system problems may occur.

## Security

Security (Kensington® Type) Lock Slot

BIOS Password

Intel PTT for Systems Without TPM Hardware

(**Factory Option**) TPM 2.0

(**Factory Option**) Fingerprint Reader Module

## Video Adapter Options

**Microsoft Hybrid Graphics Mode or Discrete Graphics Mode**

Supports up to 4 Active Displays

Supports NVIDIA Surround View via HDMI x 1 and MiniDP x2

**Intel Integrated GPU**

**Intel® HD Graphics 530**

Dynamic Frequency

Intel Dynamic Video Memory Technology

Microsoft DirectX®12 Compatible

**NVIDIA® Discrete GPU**

**NVIDIA® GeForce GTX 1060**

**6GB** GDDR5 Video RAM

Microsoft DirectX®12 Compatible

Supports GPU Overclocking

## Pointing Device

Built-in Touchpad (scrolling key functionality integrated)

## Keyboard

(**Factory Option**) **Full Color Illuminated** Full-size Winkey Keyboard (with numeric keypad)

Or

(**Factory Option**) Full-size **Illuminated White LED** Winkey Keyboard (with numeric keypad)

## Storage

(**Factory Option**) Two **SATA** M.2 2280 SSDs supporting RAID level 0/1

Or

(**Factory Option**) One **PCIe Gen3 x4** M.2 2280 SSD

**Two** Changeable 2.5" (6cm) **SATA** (Serial) Hard Disk Drives (HDDs)/SSDs (**1st: 7.0mm (h) & 2nd: 7.0mm/9.5mm (h)**) supporting RAID Level 0/1

Or

**One** changeable 2.5" (6cm) **7.0mm/9.5mm (h) SATA** (Serial) Hard Disk Drive/Solid State Drive (SSD)

## Audio

High Definition Audio Compliant Interface

S/PDIF Digital Output

Two Speakers

Sound Blaster Audio

ANSP™ 3D sound technology on headphone output

Built-In Array Microphone

**Note:** External 5.1CH Audio Output Supported by Line-Out, Microphone-In and Headphone & S/PDIF Out Combo Jacks

## Interface

Two USB 3.1 Gen 2 Type C Ports

Three USB 3.0 (USB 3.1 Gen 1) Ports (Including one AC/DC Powered USB port)

Two Mini DisplayPorts (1.3)

One HDMI-Out Port

One 2-In-1 Audio Jack (Headphone & S/PDIF Optical Output Combo Jack)

One Microphone-In Jack

One Line-Out Jack

One RJ-45 LAN Jack

One DC-In Jack

## Communication

Built-In Gigabit Ethernet LAN

2.0M FHD PC Camera Module

(**Factory Option**) M.2 3G/4G Module

**WLAN/ Bluetooth M.2 Modules:**

(**Factory Option**) Intel® Wireless-AC 8260 Wireless LAN (**802.11ac**) + Bluetooth **4.1**

(**Factory Option**) Intel® Wireless-N 7265 Wireless LAN (**802.11b/g/n**) + Bluetooth **4.0**

(**Factory Option**) Intel® Wireless-AC 3165 Wireless LAN (**802.11ac**) + Bluetooth **4.0**

(**Factory Option**) Qualcomm® Atheros Killer™ Wireless-AC 1535 Wireless LAN (**802.11ac**) + Bluetooth **4.1**

(**Factory Option**) Qualcomm® Wireless LAN (**802.11ac/ad**) + Bluetooth **4.1**

## Card Reader

Embedded Multi-In-1 Push-Push Card Reader

MMC (MultiMedia Card) / RS MMC

SD (Secure Digital) / Mini SD / SDHC/ SDXC

## M.2 Slots

Slot 1 for **Combo WLAN and Bluetooth** Module

Slot 2 for **SATA** or **PCIe Gen3 x4 SSD**

Slot 3 for **SATA SSD**

(**Factory Option**) Slot 4 for **3G/4G** Module

**Note:** (**Factory Option**) **LTE** or **802.11ad** Antenna

**M.2 SSD Limitation**

When slot 3 has an M.2 SATA SSD installed, then slot 2 will not be available for M.2 PCIe SSDs.

## Features

Supports NVIDIA G-SYNC Technolgy in dGPU Mode

(G-SYNC is only supported if you have a G-SYNC capable display and a GTX series video adapter)

Virtual Reality Ready

## Environmental Spec

**Temperature**

Operating: 5°C - 35°C

Non-Operating: -20°C - 60°C

**Relative Humidity**

Operating: 20% - 80%

Non-Operating: 10% - 90%

## Power

Embedded 4-Cell Polymer Battery Pack, 60WH

Full Range AC/DC Adapter

AC Input: 100 - 240V, 50 - 60Hz

DC Output: 19V, 10.5A (**200W**)

## Dimensions & Weight

385mm (w) * 271mm (d) * 25.4mm (h)

2.6kg (Barebone with 60WH Battery)

# External Locator - Top View with LCD Panel Open

*Figure 1*
**Top View**

1. PC Camera
2. *PC Camera LED
   **When the PC camera is in use, the LED will be illuminated.*
3. Built-In Array Microphone
4. LCD
5. Speakers
6. Power Button
7. Keyboard
8. Touchpad & Buttons
9. Fingerprint Reader (**Optional**)

# External Locator - Front & Right Side Views

FRONT VIEW

*Figure 2*
**Front View**

1. LED Indicator

RIGHT SIDE VIEW

*Figure 3*
**Right Side View**

1. Headphone & S/PDIF Combo Jack
2. Microphone-In Jack
3. Line-Out Jack
4. USIM Card Reader (for 3G/4G USIM Cards)
5. Multi-in-1 Card Reader
6. USB 3.1 Ports
7. USB 3.0 Port
8. RJ-45 LAN Jack
9. Security Lock Slot

# External Locator - Left Side & Rear View

*Figure 4*
**Left Side View**

1. Vent
2. HDMI-Out Port
3. Powered USB 3.0 Port
4. Mini DisplayPorts

LEFT SIDE VIEW

*Figure 5*
**Rear View**

1. Vent
2. DC-In Jack
3. USB 3.0/3.1 Port

REAR VIEW

# External Locator - Bottom View

*Figure 6*
**Bottom View**

1. Vent

**Overheating**

To prevent your computer from overheating, make sure nothing blocks any vent while the computer is in use.

# Mainboard Overview - Top (Key Parts)

*Figure 7*
**Mainboard Top Key Parts**

1. Memory Slots DDR4 SO-DIMM
2. KBC-ITE IT8587
3. CMOS Battery

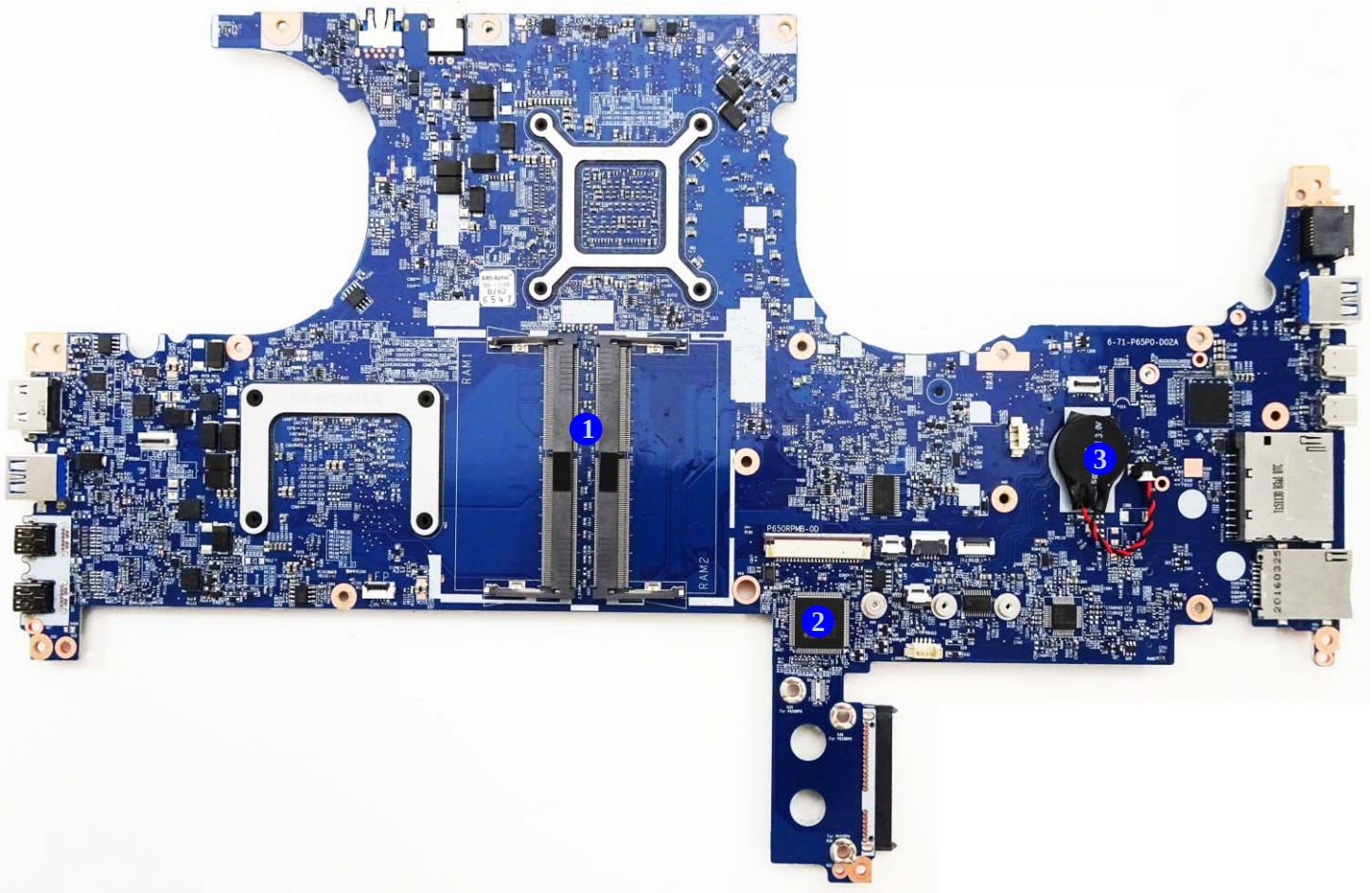

# Mainboard Overview - Bottom (Key Parts)

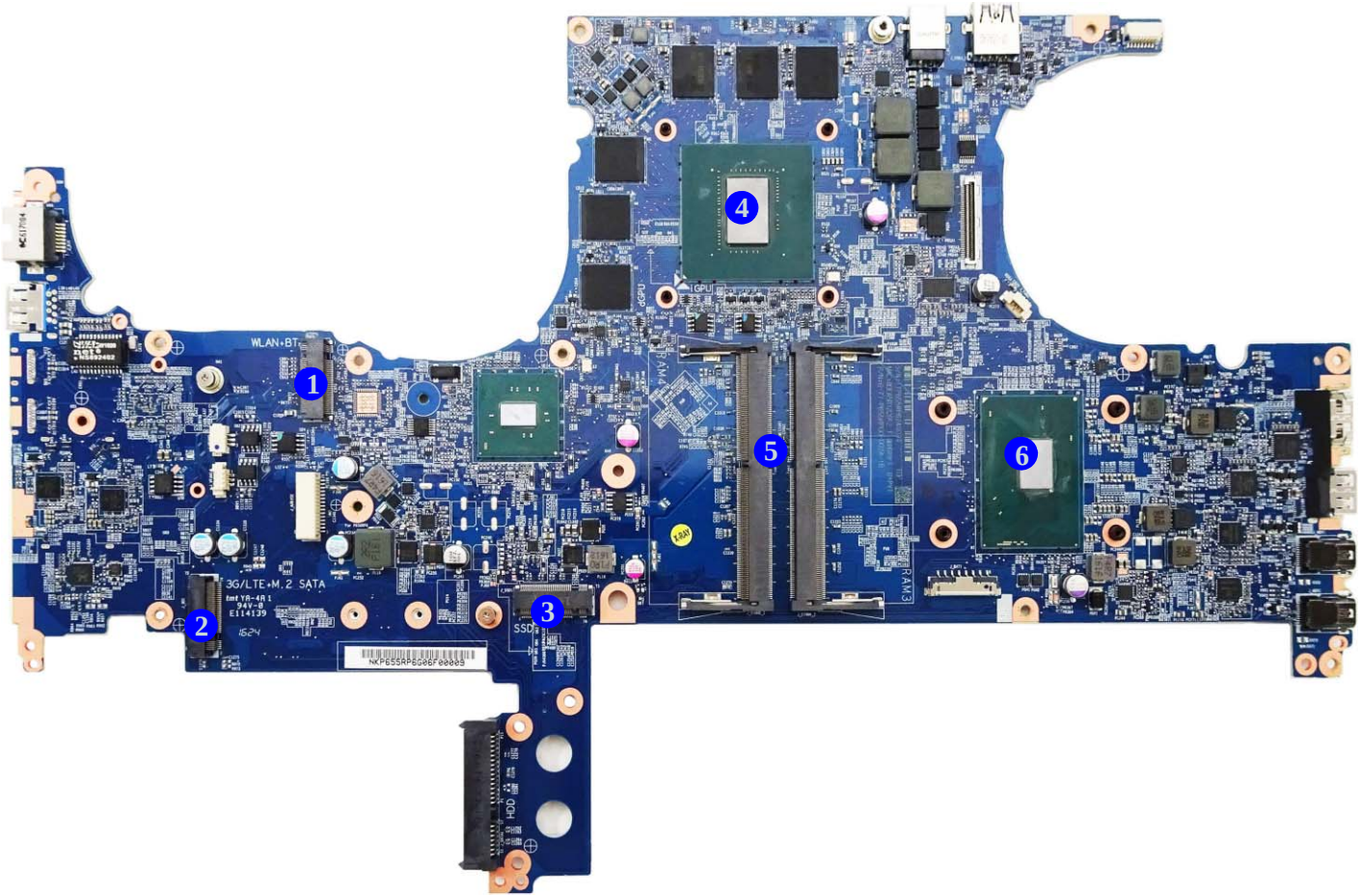


*Figure 8*
**Mainboard Bottom Key Parts**

1. Mini-Card Connector (WLAN Module)
2. Mini-Card Connector (M.2 3G/SATA Module)
3. Mini-Card Connector (M.2 PCIE/SATA SSD Module)
4. GPU-GTX1060M
5. Memory Slots DDR4 SO-DIMM
6. CPU

# Mainboard Overview - Top (Connectors)

*Figure 9*
**Mainboard Top Connectors**

1. HDMI Port
2. USB Port 3.0 Connector
3. Mini Display Port
4. USB Port 3.1 Connector
5. DC-In Jack
6. Keyboard Cable Connector
7. TP Connector
8. Speaker Connector
9. USIM Card Reader (for 3G/ 4G USIM Cards)
10. Multi-in-1 Card Reader
11. RJ-45 LAN Jack

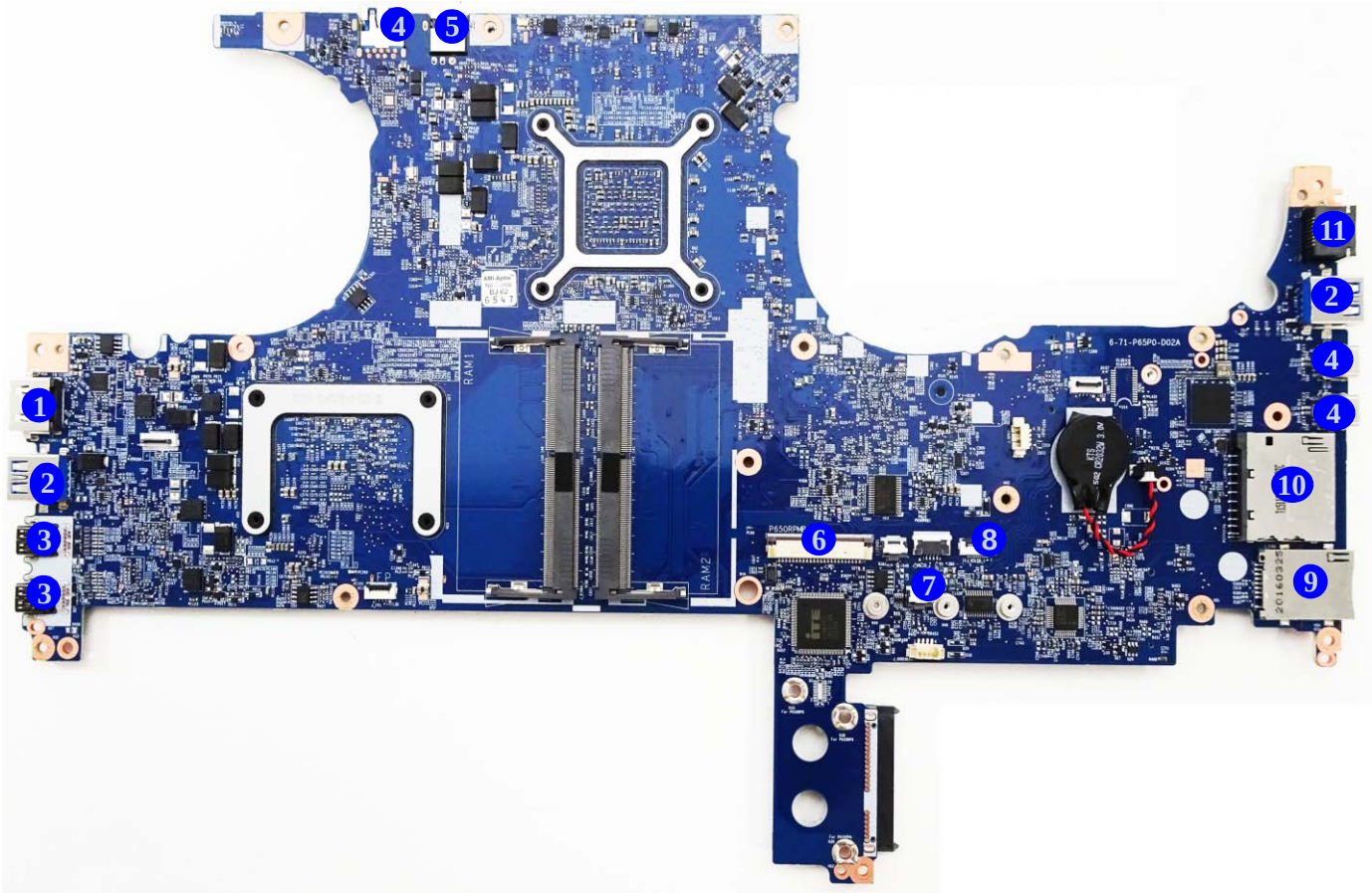

# Mainboard Overview - Bottom (Connectors)

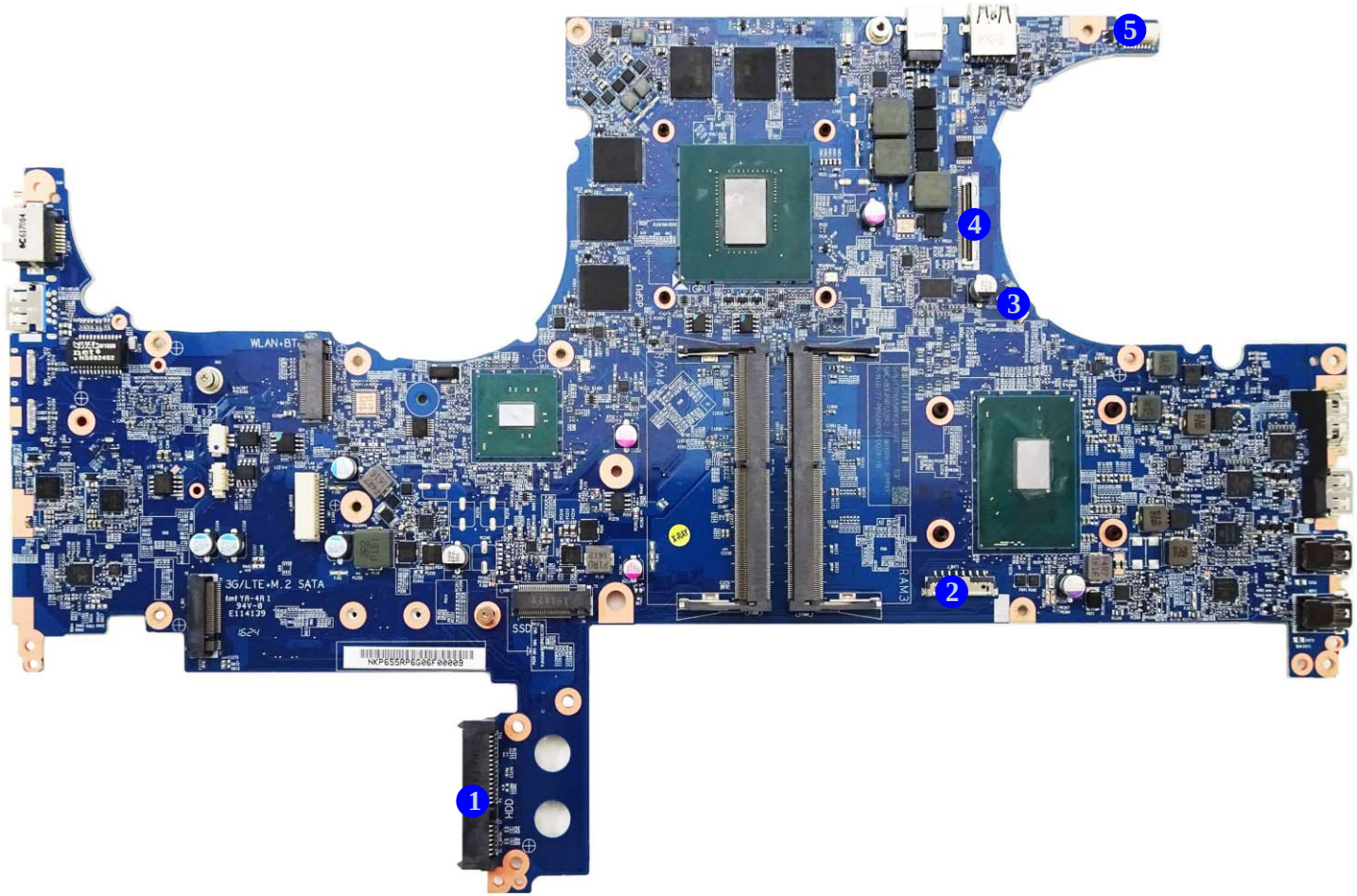


*Figure 10*
**Mainboard Bottom Connectors**

1. HDD Connector
2. Battery Connector
3. Fan Connector
4. LCD Cable Connector
5. CCD Connector

# Chapter 2: Disassembly

## Overview

This chapter provides step-by-step instructions for disassembling the ***P650RP6(-G) / P651RP6(-G)*** series notebook's parts and subsystems. When it comes to reassembly, reverse the procedures (unless otherwise indicated).

We suggest you completely review any procedure before you take the computer apart.

Procedures such as upgrading/replacing the RAM, optical device and hard disk are included in the User's Manual but are repeated here for your convenience.

To make the disassembly process easier each section may have a box in the page margin. Information contained under the figure # will give a synopsis of the sequence of procedures involved in the disassembly procedure. A box with a lists the relevant parts you will have after the disassembly process is complete. **Note**: The parts listed will be for the disassembly procedure listed ONLY, and not any previous disassembly step(s) required. Refer to the part list for the previous disassembly procedure. The amount of screws you should be left with will be listed here also.

A box with a will also provide any possible helpful information. A box with a contains warnings.

An example of these types of boxes are shown in the sidebar.

Information

Warning

**NOTE**: All disassembly procedures assume that the system is turned **OFF**, and disconnected from any power supply (the battery is removed too).

## Maintenance Tools

The following tools are recommended when working on the notebook PC:

- M3 Philips-head screwdriver
- M2.5 Philips-head screwdriver (magnetized)
- M2 Philips-head screwdriver
- Small flat-head screwdriver
- Pair of needle-nose pliers
- Anti-static wrist-strap

## Connections

Connections within the computer are one of four types:

| | |
|---|---|
| Locking collar sockets for ribbon connectors | To release these connectors, use a small flat-head screwdriver to gently pry the locking collar away from its base. When replacing the connection, make sure the connector is oriented in the same way. The pin1 side is usually not indicated. |
| Pressure sockets for multi-wire connectors | To release this connector type, grasp it at its head and gently rock it from side to side as you pull it out. Do not pull on the wires themselves. When replacing the connection, do not try to force it. The socket only fits one way. |
| Pressure sockets for ribbon connectors | To release these connectors, use a small pair of needle-nose pliers to gently lift the connector away from its socket. When replacing the connection, make sure the connector is oriented in the same way. The pin1 side is usually not indicated. |
| Board-to-board or multi-pin sockets | To separate the boards, gently rock them from side to side as you pull them apart. If the connection is very tight, use a small flat-head screwdriver - use just enough force to start. |

## Maintenance Precautions

The following precautions are a reminder. To avoid personal injury or damage to the computer while performing a removal and/or replacement job, take the following precautions:

1. **Don't drop it**. Perform your repairs and/or upgrades on a stable surface. If the computer falls, the case and other components could be damaged.
2. **Don't overheat it**. Note the proximity of any heating elements. Keep the computer out of direct sunlight.
3. **Avoid interference**. Note the proximity of any high capacity transformers, electric motors, and other strong magnetic fields. These can hinder proper performance and damage components and/or data. You should also monitor the position of magnetized tools (i.e. screwdrivers).
4. **Keep it dry**. This is an electrical appliance. If water or any other liquid gets into it, the computer could be badly damaged.
5. **Be careful with power**. Avoid accidental shocks, discharges or explosions.
   - Before removing or servicing any part from the computer, turn the computer off and detach any power supplies.
   - When you want to unplug the power cord or any cable/wire, be sure to disconnect it by the plug head. Do not pull on the wire.
6. **Peripherals** – Turn off and detach any peripherals.
7. **Beware of static discharge**. ICs, such as the CPU and main support chips, are vulnerable to static electricity. Before handling any part in the computer, discharge any static electricity inside the computer. When handling a printed circuit board, do not use gloves or other materials which allow static electricity buildup. We suggest that you use an anti-static wrist strap instead.
8. **Beware of corrosion**. As you perform your job, avoid touching any connector leads. Even the cleanest hands produce oils which can attract corrosive elements.
9. **Keep your work environment clean**. Tobacco smoke, dust or other air-born particulate matter is often attracted to charged surfaces, reducing performance.
10. **Keep track of the components**. When removing or replacing any part, be careful not to leave small parts, such as screws, loose inside the computer.

**Power Safety Warning**

Before you undertake any upgrade procedures, make sure that you have turned off the power, and disconnected all peripherals and cables (including telephone lines and power cord). It is advisable to also remove your battery in order to prevent accidentally turning the machine on.

## Cleaning

Do not apply cleaner directly to the computer, use a soft clean cloth.
Do not use volatile (petroleum distillates) or abrasive cleaners on any part of the computer.

# Disassembly Steps

The following table lists the disassembly steps, and on which page to find the related information. **PLEASE PERFORM THE DISASSEMBLY STEPS IN THE ORDER INDICATED.**

### To remove the Keyboard:

1. Remove the keyboard *page 2 - 5*

### To remove the Battery:

1. Remove the battery *page 2 - 6*

### To remove the HDD:

1. Remove the battery *page 2 - 6*
2. Remove the HDD *page 2 - 8*

### To remove the System Memory:

1. Remove the battery *page 2 - 6*
2. Remove the system memory *page 2 - 10*

### To remove and install the M.2 SSD:

1. Remove the battery *page 2 - 6*
2. Remove the M.2 SSD *page 2 - 13*
3. Install the M.2 SSD *page 2 - 15*

### To remove the Wireless LAN Module:

1. Remove the battery *page 2 - 6*
2. Remove the WLAN *page 2 - 16*

### To remove the 3G/4G Module:

1. Remove the battery *page 2 - 6*
2. Remove the 3G/4G *page 2 - 18*

# Removing the Keyboard

1. Turn **off** the computer, turn it over.
2. Remove screws 1 - 2 from the bottom of the computer.
3. Open it up with the LCD on a flat surface before pressing at point 3 to release the keyboard module (use the special eject stick 4 to do this) while releasing the keyboard in the direction of the arrow 5 as shown (***Figure 1a***).
4. Carefully lift the keyboard 6 up, being careful not to bend the keyboard ribbon cable 7. Disconnect the keyboard ribbon cable 7 from the locking collar socket by using a flat-head screwdriver to pry the locking collar pins 8 away from the base (***Figure 1b***).
5. Carefully lift the keyboard 6 off the computer (***Figure 1c***).

a.

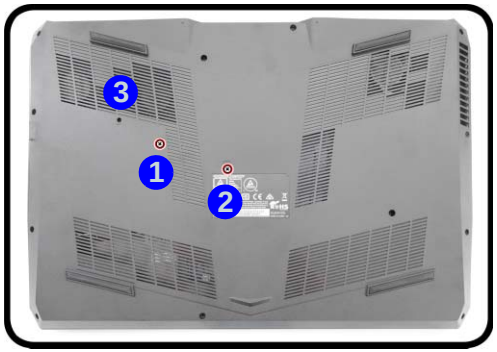


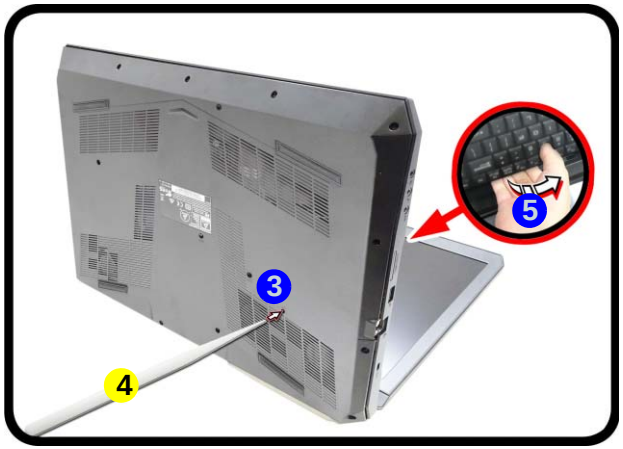


b.

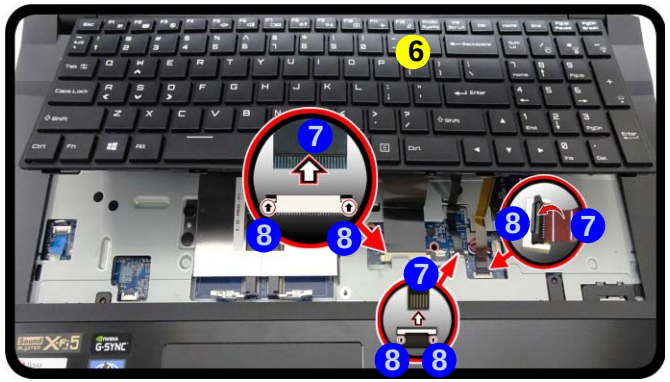


c.

*Figure 1*
**Keyboard Removal**

a. Remove the screws from the bottom of the computer and then eject the keyboard using a special eject stick to push the keyboard out while releasing the keyboard as shown.
b. Lift the keyboard up and disconnect the keyboard ribbon cable from the locking collar socket.
c. Remove the keyboard.

**Re-inserting the Keyboard**

When re-inserting the keyboard firstly, align the keyboard tabs at the bottom of the keyboard with the slots in the case.

4. Eject Stick
6. Keyboard

- 2 Screws

*Figure 2*
**Battery Removal**

a. Remove the SD cover and screws.
b. Remove the bottom case.
c. Locate the battery.

# Removing the Battery

1. Turn the computer **off**, and turn it over.
2. Remove the SD card cover 1 and screws 2 - 15 (***Figure 2a***).
3. Carefully lift the bottom case 16 up in the direction of the arrow 17 and remove it (***Figure 2b***).
4. The battery will be visible at point 18 on the computer (***Figure 2c***).

a.

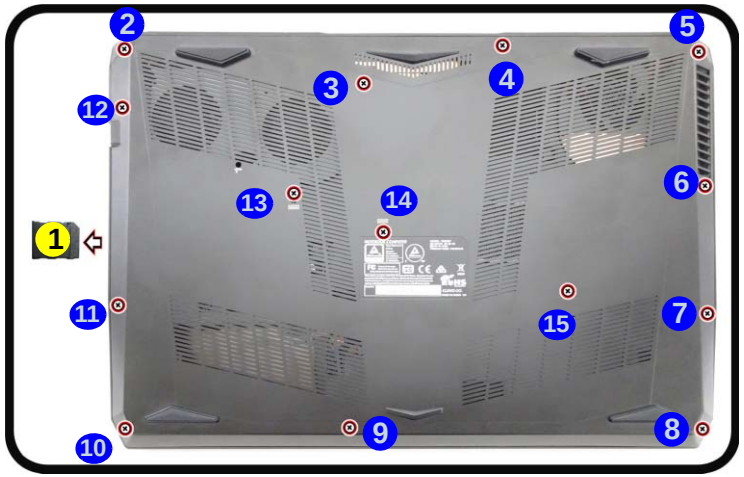


b.

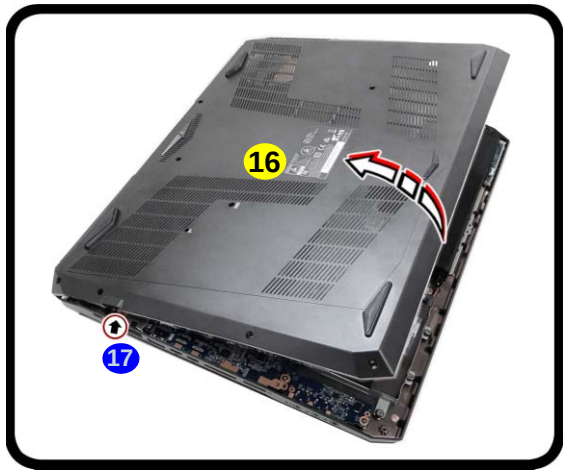


c.

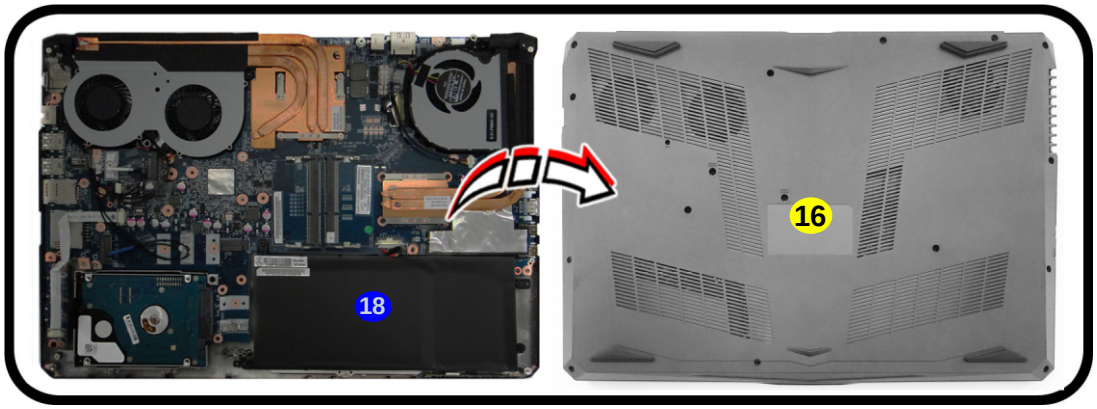


1. SD Card Cover
16. Bottom Case

- 14 Screws

5. Carefully disconnect the cable 19, then remove screws 20 - 22 (*Figure 3b*).
6. Lift the battery 23 off the computer (*Figure 3e*).
7. Reinsert the bottom case starting from point 24 as shown (*Figure 3f*) to avoid damaging the rear USB 3.0 port. Tighten the screws to secure the bottom case in place.

*Figure 3*
**Battery Removal (cont'd.)**

d. Disconnect the cable and remove the screws.
e. Lift the battery off the computer.
f. Reinsert the bottom case and tighten the screws.

d.

e.

f.

23. Battery

- 3 Screws

*Figure 4*
**HDD Assembly Removal**

a. Locate the HDD.
b. Remove the screws.

# Removing the Hard Disk Drive

The hard disk drive can be taken out to accommodate other 2.5" serial (SATA) hard disk drives with a height of 9.5mm or 7mm (h). Follow your operating system's installation instructions, and install all necessary drivers and utilities (as outlined in **Chapter 4 of the User's Manual**) when setting up a new hard disk.

## Hard Disk Disassembly Process

1. Turn **off** the computer, and remove the battery (***page 2 - 6***).
2. The HDD will be visible at point 1 on the mainboard (***Figure 4a***).
3. Remove screws 2 - 5 from the HDD assembly (***Figure 4b***).

**a.**

**b.**

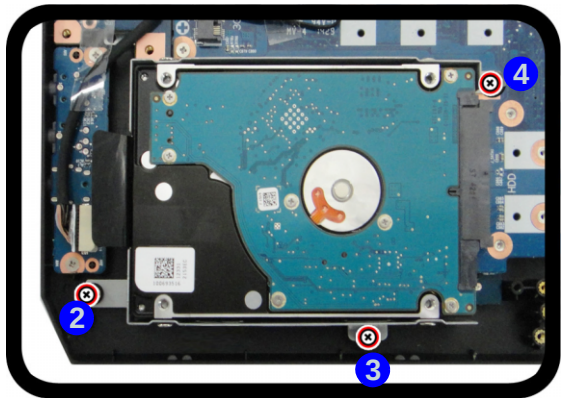


6. Hard Disk

- 4 Screws

**HDD System Warning**

New HDD's are blank. Before you begin make sure:

You have backed up any data you want to keep from your old HDD.

You have all the CD-ROMs and FDDs required to install your operating system and programs.

If you have access to the internet, download the latest application and hardware driver updates for the operating system you plan to install. Copy these to a removable medium.

4. Slightly lift and pull the hard disk in the direction of arrow 6 (*Figure 5c*).
5. Lift the hard disk assembly 7 out of the bay 8 (*Figure 5d*).
6. Remove screws 9 - 16 and bracket 17 from the hard disk 18 (*Figure 5e*).
7. Reverse the process to install a new hard disk (do not forget to replace the screws).

*Figure 5*
**HDD Assembly Removal (cont'd.)**

c. Slightly lift and pull the HDD in the direction of the arrow.
d. Lift the HDD assembly out of the bay.
e. Remove the screws and bracket from the HDD.

c.

d.

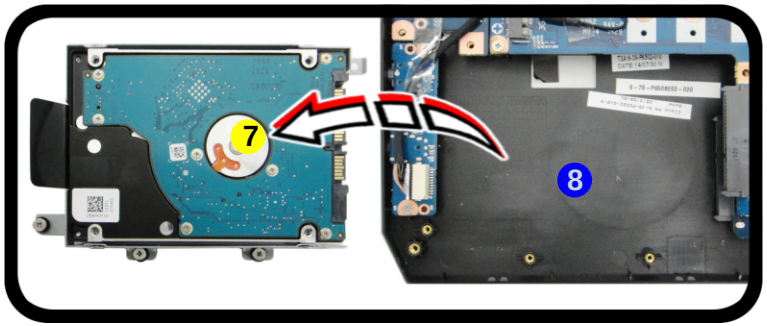


e.

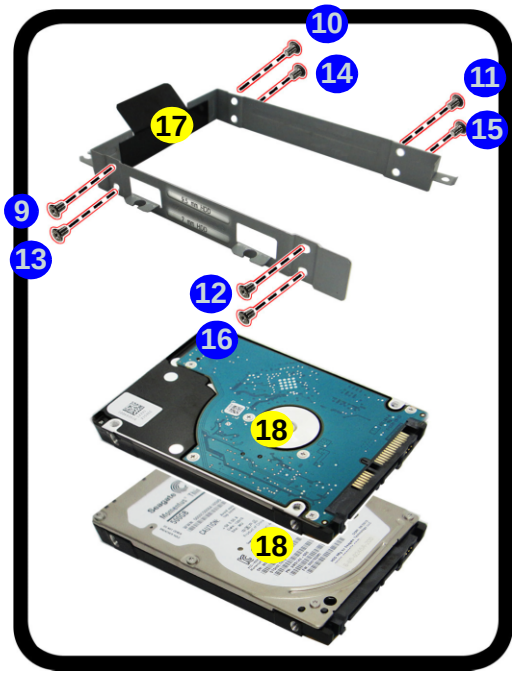


**Installing 9.5mm or 7mm HDD**

Note that the hard disks pictured on the following pages are all 7mm(h) hard disk drive.

In some cases 9.5mm(h) hard disk drives will be installed. It can be installed on either upper or lower slot.

There are two hard disk drive options:

**Two** changeable 2.5" (6cm) **7.0mm** (h) **SATA** (Serial) Hard Disk Drives/Solid State Drives (SSD) supporting RAID level 0/1
Or
**One** changeable 2.5" (6cm) **9.5mm** (h) **SATA** (Serial) Hard Disk Drive/Solid State Drive (SSD)

For more information, contact your distributor/supplier, and bear in mind your warranty terms.

7. HDD Assembly
17. Adhesive Cover
18. HDD

- 8 Screws

*Figure 6*
**RAM-1 Module Removal**

a. The RAM modules will be visible at point 1.
b. Remove the screws and lift the shielding plate out.

# Removing the System Memory (RAM)

The computer has four memory sockets for 260 pin Small Outline Dual In-line Memory Modules (SO-DIMM) supporting DDR4 Up to 2400 MHz. The main memory can be expanded up to 64GB. The total memory size is automatically detected by the POST routine once you turn on your computer.

## Memory-1 Upgrade Process

1. Turn **off** the computer, turn it over, remove the keyboard (***page 2 - 5***).
2. The RAM modules will be visible at point 1 after removing the shielding plate (***Figure 6a***).
3. Remove screws 2 - 5 and lift the shielding plate 6 off the computer (***Figure 6b***).

**a.**

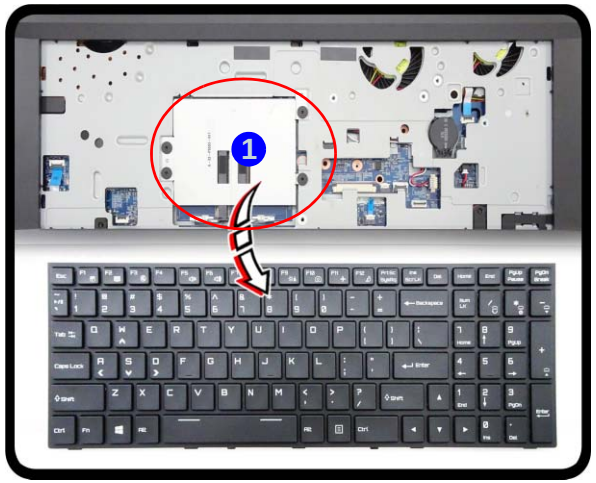


**b.**

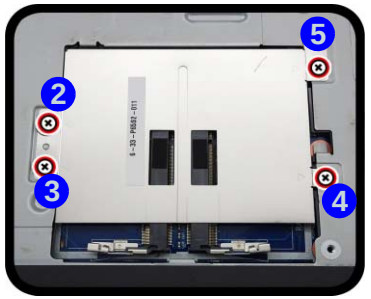


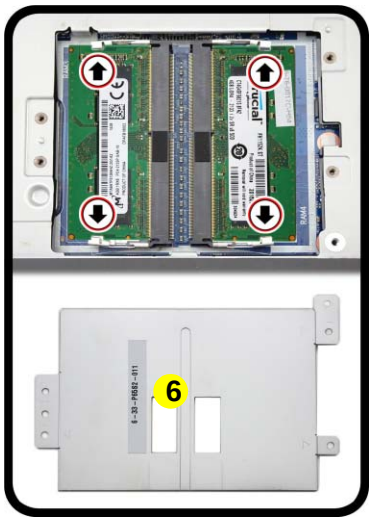


**Contact Warning**

Be careful not to touch the metal pins on the module's connecting edge. Even the cleanest hands have oils which can attract particles, and degrade the module's performance.

6. RAM Shielding Plate

- 4 Screws

4. Gently pull the two release latches (7 & 8) on the sides of the memory socket in the direction indicated by the arrows (***Figure 7c***). The RAM module 9 will pop-up (***Figure 7d***), and you can then remove it.
5. Pull the latches to release the second module if necessary.
6. Insert a new module holding it at about a 30° angle and fit the connectors firmly into the memory slot.
7. The module will only fit one way as defined by its pin alignment. Make sure the module is seated as far into the slot as it will go. DO NOT FORCE IT; it should fit without much pressure.
8. Press the module in and down towards the mainboard until the slot levers click into place to secure the module.

*Figure 7*
**RAM-1 Module Removal (cont'd)**

c. Pull the release latches.
d. Remove the module.

**c.**

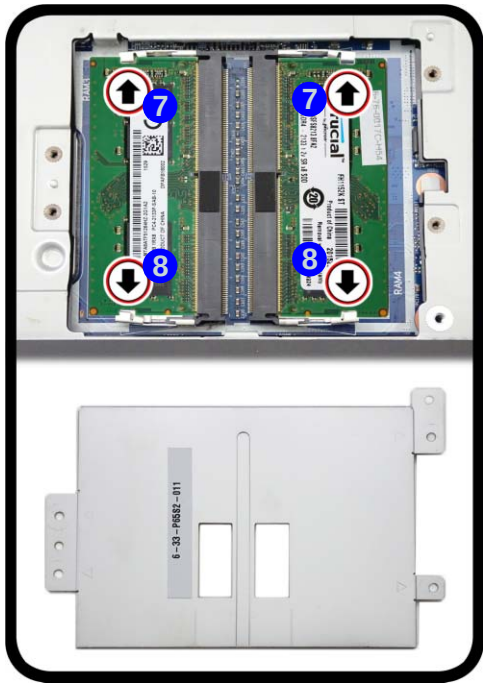


**d.**

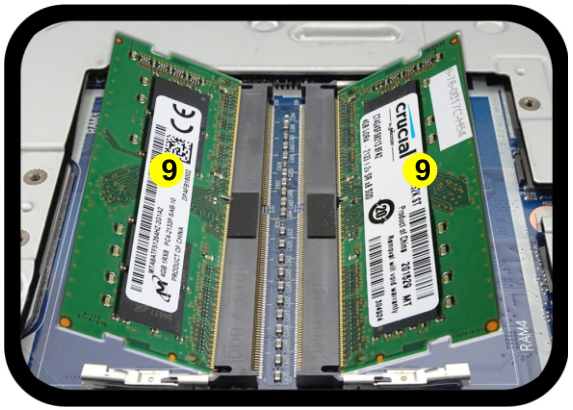


**Contact Warning**

Be careful not to touch the metal pins on the module's connecting edge. Even the cleanest hands have oils which can attract particles, and degrade the module's performance.

9. RAM Module

*Figure 8*
**RAM-2 Module Removal**

a. The RAM modules will be visible at point 1 on the mainboard.
b. Pull the release latches.
c. Remove the module.

**Contact Warning**

Be careful not to touch the metal pins on the module's connecting edge. Even the cleanest hands have oils which can attract particles, and degrade the module's performance.

4. RAM Module

## Memory-2 Upgrade Process

1. Turn **off** the computer, turn it over, remove the battery (***page 2 - 6***).
2. The RAM-2 modules will be visible at point 1 on the mainboard (***Figure 8a***).
3. Gently pull the two release latches (2 & 3) on the sides of the memory socket in the direction indicated by the arrows (***Figure 8b***). The RAM module 4 will pop-up (***Figure 8c***), and you can then remove it.
4. Pull the latches to release the second module if necessary.
5. Insert a new module holding it at about a 30° angle and fit the connectors firmly into the memory slot.
6. The module will only fit one way as defined by its pin alignment. Make sure the module is seated as far into the slot as it will go. DO NOT FORCE IT; it should fit without much pressure.
7. Press the module in and down towards the mainboard until the slot levers click into place to secure the module.
8. Replace the bottom cover and the screws (see ***page 2 - 6***).
9. Restart the computer to allow the BIOS to register the new memory configuration as it starts up.

**a.**

**b.**

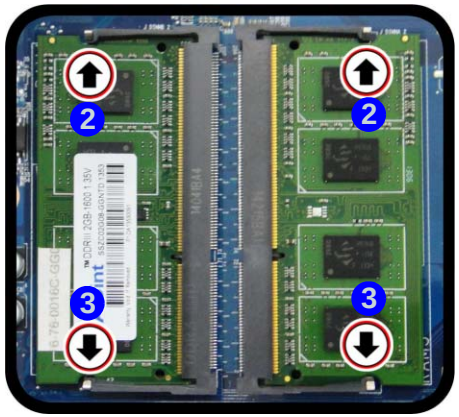


**c.**

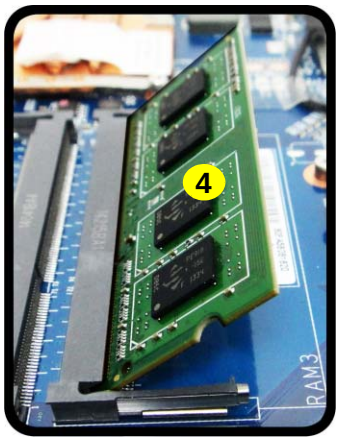

# Removing and Installing the M.2 SSD Module

## M.2 SSD-1 Removal Procedure

1. Turn **off** the computer, turn it over, remove the battery (***page 2 - 6***).
2. The M.2 SSD module will be visible at point 1 on the mainboard (***Figure 9a***).
3. Remove the screw 2 (***Figure 9b***)
4. The M.2 SSD module 3 (***Figure 9c***) will pop-up, and you can remove it from the computer.
5. Reverse the process to install a new module (do not forget to replace the screws and thermal pad).

*Figure 9*
**M.2 SSD-1 Module Removal**

a. Locate the M.2 SSD.
b. Remove the screw.
c. The M.2 SSD module will pop up.

a.

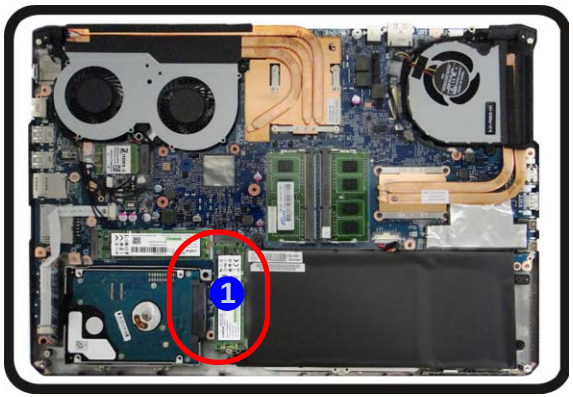


b.

c.

3.M2 SSD Module

- 1 Screw

*Figure 10*
**M.2 SSD-2 Module Removal**

a. Locate the module.
b. Disconnect the cables and remove the screw.
c. The module will pop-up.
d. Lift the module up off the socket.

## M.2 SSD-2 Removal Procedure

1. Turn **off** the computer, remove the battery (***page 2 - 6***).
2. Locate the module, it is visible at point 1 (***Figure 10a***).
3. Remove the screw 2 from the module (***Figure 10b***).
4. The module 3 will pop-up (***Figure 10c***).
5. Lift the module 3 up and off the computer (***Figure 10d***).

a.

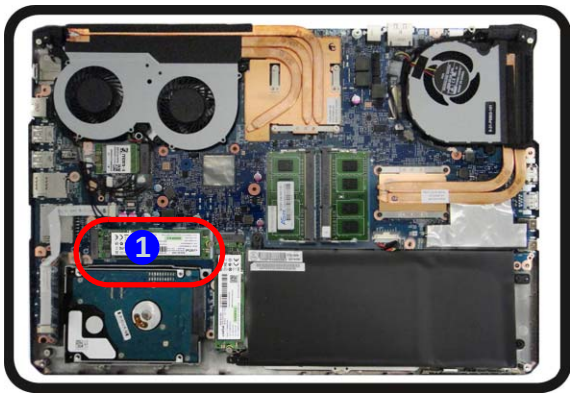


b.

c.

d.

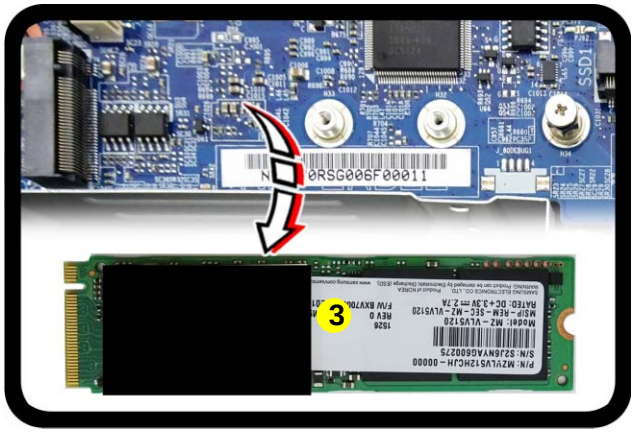


3. M.2 SSD Module

- 1 Screw

## M.2 SSD Installation Procedure

1. Place the thermal pad (1) on the module as shown (***Figure 11a***).
2. Insert the module (2) in the computer (***Figure 11b***).
3. Tighten the screw (3) to secure it in place (***Figure 11c***).

*Figure 11*
**M.2 SSD Module Installation**

a. Place the thermal pad.
b. Insert the module.
c. Tighten the screw.

**a.**

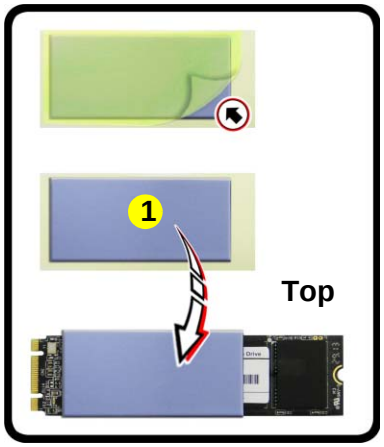


**b.**

**c.**

**Thermal Pad**

Be sure to place the thermal pad's adhesive side down onto the module surface as shown.

1. Thermal Pad
2. M2 SSD Module

- 1 Screw

*Figure 12*
**Wireless LAN Module Removal**

a. Locate the WLAN.
b. Disconnect the cables and remove the screw.
c. The WLAN module will pop up.

Note: Make sure you reconnect the antenna cable to the "1 + 2" socket (***Figure 12b***).

# Removing the Wireless LAN Module

1. Turn **off** the computer, turn it over, remove the battery (***page 2 - 6***).
2. The Wireless LAN module will be visible at point 1 on the mainboard (***Figure 12a***).
3. Carefully disconnect the cables 2 & 3, and then remove the screw 4 (***Figure 12b***)
4. The Wireless LAN module 5 (***Figure 12c***) will pop-up, and you can remove it from the computer.

**a.**

**c.**

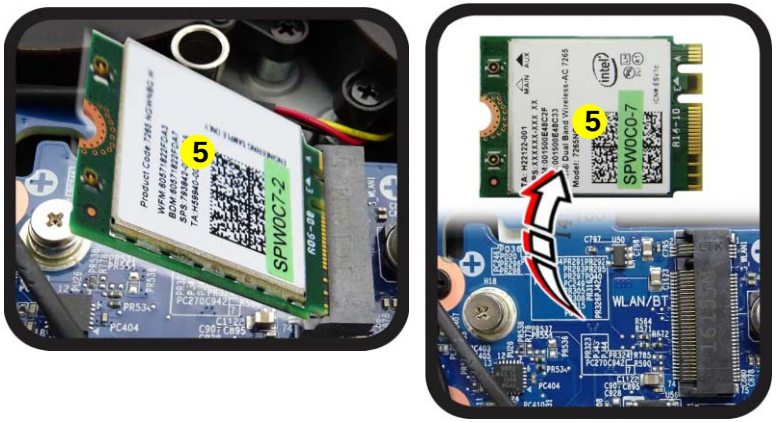


**b.**

5.Wireless LAN Module

- 1 Screw

# Wireless LAN, Combo, 3G & LTE Module Cables

Note that the cables for connecting to the antennae on WLAN, WLAN & Bluetooth Combo, 3G and LTE modules are not labelled. The cables/covers (each cable will have either a black or transparent cable cover) are color coded for identification as outlined in the table below.

| Module Type | Antenna Type | Cable Color | Cable Cover Type |
|---|---|---|---|
| WLAN/WLAN & Bluetooth Combo | WM 1 | Black | Transparent |
| | WM 2 | | White |
| LTE Broadband | LTE 1 | Black | Black |
| | LTE 2 | | Blue |
| 3G Broadband | 3G 1 | Black | Black |
| | 3G 2 | | Blue |

Cable 1 is usually connected to antenna 1 (Main) on the module, and cable 2 to antenna 2 (Aux).

# Removing the 3G/4G Module

*Figure 13*
**3G/4G Module Removal**

a. Locate the module.
b. Disconnect the cables and remove the screw.
c. The module will pop-up.
d. Lift the module up off the socket.

## 3G/4G Module Removal Procedure

1. Turn **off** the computer, remove the battery (***page 2 - 6***).
2. Locate the module, it is visible at point 1 (***Figure 13a***).
3. Carefully disconnect the cables 2 & 3, and then remove the screw 4 from the module (***Figure 13b***).
4. The module 5 will pop-up (***Figure 13c***).
5. Lift the module 5 up and off the computer (***Figure 13d***).

a.

c.

b.

d.

5. 3G/4G Module

- 1 Screw

# Appendix A:Part Lists

This appendix breaks down the ***P650RP6(-G) / P651RP6(-G)*** series notebook's construction into a series of illustrations. The component part numbers are indicated in the tables opposite the drawings.

**Note:** This section indicates the *manufacturer's* part numbers. Your organization may use a different system, so be sure to cross-check any relevant documentation.

**Note:** Some assemblies may have parts in common (especially screws). However, the part lists DO NOT indicate the total number of duplicated parts used.

**Note:** Be sure to check any update notices. The parts shown in these illustrations are appropriate for the system at the time of publication. Over the product life, some parts may be improved or re-configured, resulting in *new* part numbers.

# Part List Illustration Location

The following table indicates where to find the appropriate part list illustration.

*Table A - 1*
**Part List Illustration Location**

| Part | |
|---|---|
| Top | *page A - 3* |
| Bottom | *page A - 4* |
| Main Board | *page A - 5* |
| HDD | *page A - 6* |
| LCD | *page A - 7* |
| LCD (Sharp) | *page A - 8* |

# Top

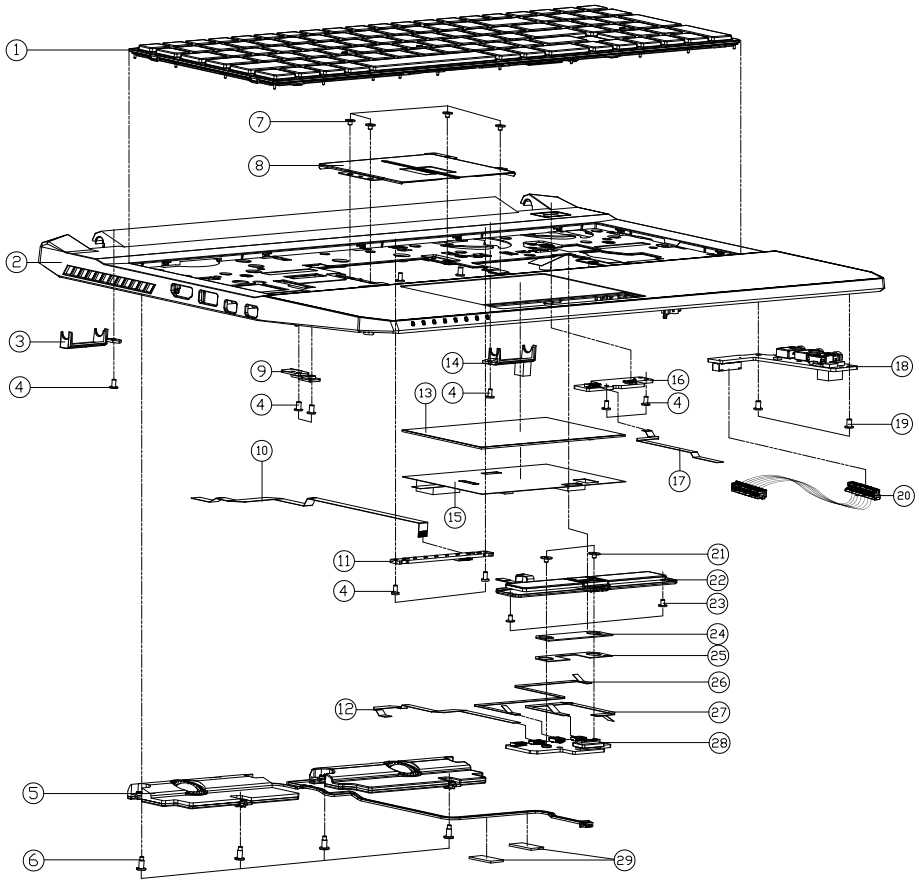


| ITEM | PART NAME | PART NO | REMARK |
|---|---|---|---|
| 1 | MULTI BL KB USA MP-SBK03SJ5C0 P650RS BLACK GAMING ISOLATION WITH WIND KEY + K/B FRAME | 6-80-P65S0-011-1 | |
| 1 | WHITE BL KB USA MP-SBK03SJ5C0 P650RE BLACK ISOLATION WITH WIND KEY + K/B FRAME | 6-80-P6500-013-1 | |
| 2 | TOP CASE MODULE DNKYO(KAPOK) P650RP6 | 6-39-P65P2-013-N | |
| 2 | TOP CASE MODULE DNKYO(KAPOK) P651RP6 | 6-39-P65P2-113-N | |
| 3 | HINGE COVER L (TEIJIN TN3715BX-CM0262BK) P650SE | 6-42-P6502-0L2 | |
| 4 | .SCREW M2*4L KI NI ICT NY (DD=Ø4.5,DT=0.4) | 6-35-B1120-4RE | |
| 5 | SPK+CABLE FRONT RAL 51X20 T5.2 2V 41 E09223A L=236.5MM R=230.0MM P650RE | 6-23-5P650-0S1 | |
| 6 | SCREW M2*6.2L NI ICT NY FOR SPEAKER | 6-35-Z1120-6R2 | |
| 7 | SCREW M2*2L KI NI ICT NY (DD=Ø5 ,T=0.5) | 6-35-B1120-2R0 | |
| 8 | DDR BRACKET(SUS304) P650RS | 6-33-P65S2-012 | |
| 9 | SPK BRK-3 (SECC T=1.0MM) P650SE | 6-33-P6502-031 | |
| 10 | FFC CABLE LED TO MB (P=0.5) 194.5MM 60V 12PIN P650SE | 6-43-P6500-040 | |
| 11 | LED BOARD V3.0 P650RP6 | 6-77-P65P4-D03 | |
| 12 | FFC CABLE FINGER TO MB (P=1.0) 123.5MM 60V 4PIN P650SE | 6-43-P6500-051 | ONLY FOR W/FINGER |
| 13 | TOUCH PAD SYNAPTICS TM-03163-002 P650RS (108*61MM) | 6-49-P65S3-010 | |
| 14 | HINGE COVER R MODULE P650SE | 6-42-P6502-R00 | |
| 15 | TP MYLAR PET P650RP6 | 6-40-P65P2-022 | |
| 16 | POWER BOARD V1.0 P650RP6 | 6-77-P65PC-D01 | |
| 17 | FFC CABLE POWER TO MB (P=1.0) 92.5MM 60V 4PIN P650SE | 6-43-P6500-030 | |
| 18 | AUDIO 3DHP BOARD V2.0 P650RP6 | 6-77-P65P8-D12 | |
| 19 | .SCREW M2.5*4L KI NI ICT NY | 6-35-21125-4R0 | |
| 20 | WIRE CABLE 30PIN 50V FOR 3D AMP AUDIO 85MM (P670RP6) | 6-43-P67P6-010 | |
| 21 | SCREW M2*2L KI BK/Z ICT NY(Ø8,T=0.6) | 6-35-B6120-2RE | |
| 22 | FUNCTION KEY FOR CLICK BUTTON MODULE W/O FINGER P650RE6 | 6-23-KP65R-022 | |
| 22 | FUNCTION KEY FOR CLICK BUTTON MODULE W/FINGER P650RE6 | 6-23-KP65R-012 | |
| 23 | SCREW M2*3L KI BZ ICT NY (DD=Ø4.5,DT=0.4) | 6-35-B6120-3RD | |
| 24 | CLICK W/O FP MYLAR PET (48*14*0.5T) P650SE | 6-40-P6502-080 | ONLY FOR W/O FINGER |
| 25 | CLICK W/FINGER MYLAR2 PET (48*14*0.3T) P650SE | 6-40-P6502-040 | ONLY FOR W/FINGER |
| 26 | FFC CABLE TRANSFER TO MB (P=0.5) 194.5MM 60V 6PIN P650RE6 | 6-43-P65R0-011 | |
| 27 | FFC CABLE TP TO CLICK (P=0.5) 101.8MM 60V 8PIN P650RE6 | 6-43-P65R0-021 | |
| 28 | CLICK BOARD V1.0 (W/O FP) P650RP6 | 6-77-P65P2-D01-1 | |
| 28 | CLICK BOARD V1.0+FINGER BOARD V1.0 P650RP6 | 6-77-P65PA-N01 | |
| 29 | TAPE MYLAR TRANSPARENT (20*10*0.05) P180HM | 6-40-P1803-020 | |

*Figure A - 1*
**Top**

# Bottom

*Figure A - 2*
**Bottom**

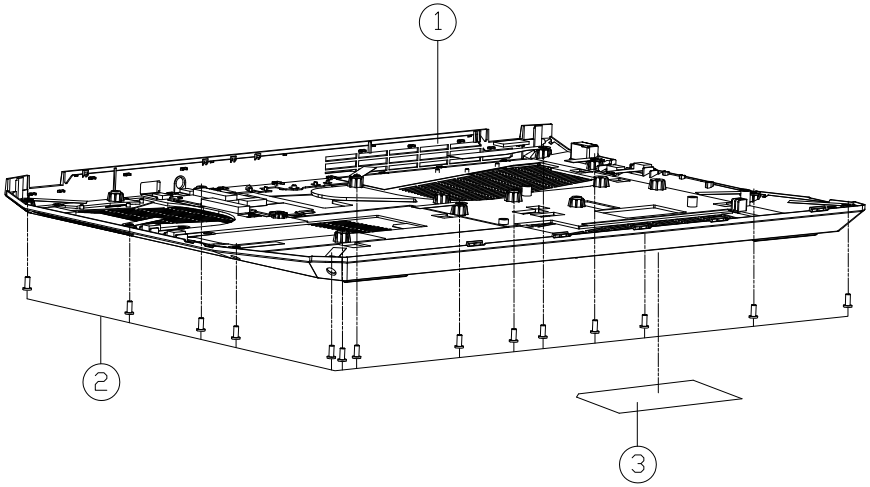


| ITEM | PART NAME | PART NO | REMARK |
|---|---|---|---|
| 1 | BOTTOM CASE MODULE P650RP6 | 6-39-P65P3-013 | |
| 1 | BOTTOM CASE MODULE P651RP6 | 6-39-P65P3-113 | |
| 2 | SCREW M2.5*6L K BZ ICT NY | 6-35-82125-6RA | |
| 3 | PRODUCT LABEL FOR P650RP6 (FOLLOW NEW CE SAFETY) | 6-45-P650RP63-011 | |
| 3 | PRODUCT LABEL FOR P651RP6 (FOLLOW NEW CE SAFETY) | 6-45-P651RP63-011 | |
| 3 | PRODUCT LABEL FOR P650RP6-G (FOLLOW NEW CE SAFETY) | 6-45-P650RP6G-011 | |
| 3 | PRODUCT LABEL FOR P651RP6-G (FOLLOW NEW CE SAFETY) | 6-45-P651RP6G-011 | |

# Main Board

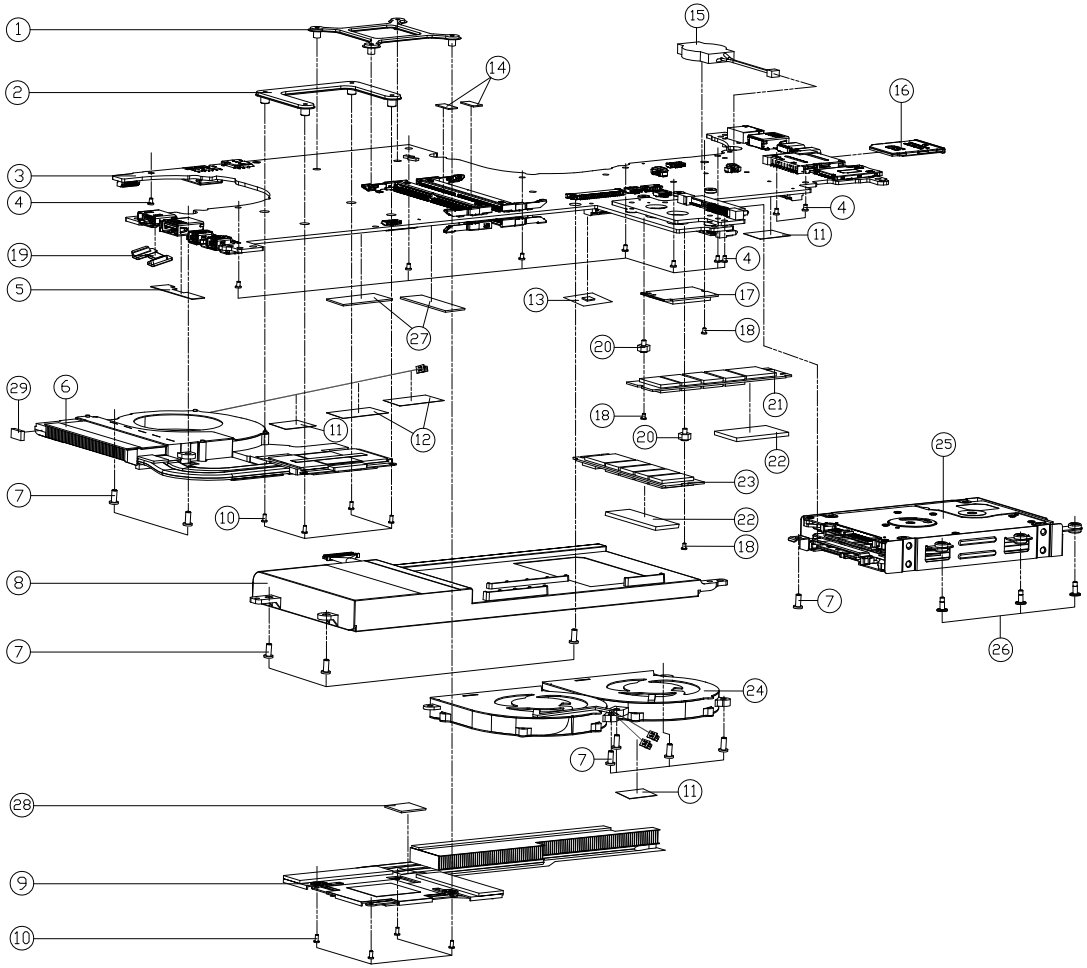

| ITEM | PART NAME | PART NO | REMARK |
|---|---|---|---|
| 1 | N17 VGA SUPPORTER M2 SUS430 P750DM2 | 6-33-P75DS-011 | |
| 2 | CPU SUPPORT BRACKET SECC T=1.2 NUT ADD 0.4MM P650RP6 | 6-33-P65PS-011 | |
| 3 | MAIN BOARD(PU)T=0.8MM(2S2) VGA (CPU)A/(TPM+HD) BOARD V3A P650RP6 | 6-77-P650RP6A-N02A-B | |
| 3 | MAIN BOARD(PU)T=0.8MM(2S2) VGA (CPU)A/(TPM+HD) BOARD V3A P650RP6 | 6-77-P650RP6A-N02A-1B | |
| 3 | MAIN BOARD(PU)T=0.8MM(2S2) VGA (CPU)A/(TPM+HD) BOARD V3A P650RP6 | 6-77-P650RP6A-N02A-A | |
| 3 | MAIN BOARD(PU)T=0.8MM(2S2) VGA (CPU)A/(TPM+HD) BOARD V3A P650RP6-6 | 6-77-P650RPGA-N02A-A | |
| 3 | MAIN BOARD(PU)T=0.8MM(2S2) VGA (CPU)A/(TPM+HD) BOARD V3A P650RP6-6 | 6-77-P650RPGA-N02A-B | |
| 4 | .SCREW M2.5×4L KI NI ICT NY | 6-35-21125-4R0 | |
| 5 | PCB MYLAR PET (35*10*0.25)MM P650RE6 | 6-40-P65RS-010 | |
| 6 | CPU HEATSINK MODULE(DIA CASTING+FAN MODULE) P650RG | 6-31-P65R2-G01 | |
| 7 | SCREW M2.5×6L K BZ ICT NY | 6-35-82125-6RA | |
| 8 | [illegible] | 6-87-P650S-4U32 | |
| 8 | [illegible] | 6-87-P650S-4253 | |
| 9 | GPU HEATSINK MODULE P650SE | 6-31-P650N-201 | |
| 10 | .SCREW M2*4L KI NI ICT NY (OD=04.5,DT=0.4) | 6-35-B1120-4RE | |
| 11 | TAPE MYLAR TRANSPARENT (20*10*0.05) P180*M | 6-40-P1803-020 | |
| 12 | TAPE MYLAR (C),MYLAR M550J | 6-40-M55J2-030 | |
| 13 | AL FOIL+THERMAL PAD 23*23MM P640RE | 6-40-P640S-010 | |
| 14 | DDR4 SOCKET RUBBER(10.8*5) SIL.ICONE P650RE6 | 6-47-P65RS-011 | |
| 15 | BAT. 20MM 3V 220MM W/CABLE 55MM DC2032(55MM)LB CH(HND) | 6-23-22015-TE0 | |
| 16 | DUMMY SD PSAN PUSH TYPE PC+ABS (C7220F-7010E) W9703JV | 6-42-W9708-010 | |
| 17 | [illegible] | 6-88-P67RF-4200 | OPTION |
| 17 | [illegible] | 6-88-W95LF-4240 | OPTION |
| 17 | [illegible] | 6-88-N240F-4200 | OPTION |
| 17 | [illegible] | 6-88-P75DF-9601 | OPTION |
| 17 | [illegible] | 6-88-P872F-8100 | OPTION |
| 18 | SCREW M2*2L KI NI ICT NY (OD=#5 ,T=0.5) | 6-35-B1120-2R0 | |
| 19 | SAFETY RUBBER FOR HDMI (SILICON RUBBER) P670RG-M | 6-47-P67R2-020-M | |
| 20 | SCREW M2*4(2L 0#25 H=3 STEEL ICT NY FOR NOTF CARD(CAMAG MATERIAL) | 6-35-ZA120-2R5 | |
| 21 | CONN VCONN+SPS (NAME) NOTE& 0SP+ NOTF CARD USB INTERFACE SC8F0 | 6-88-S210W-8800 | OPTION |
| 21 | [illegible] | 6-88-W3306-8841 | OPTION |
| 21 | SSD M2 2280 32GB SAMSUNG KUM(K62KC,MAMA (PM87) SATA3 V2 EVO | 6-85-D515B-S01 | OPTION |
| 21 | SSD M2 2280 256GB SAMSUNG KUM(K25KUP(MAMA (PM87) SATA3 V2 EVO | 6-85-D51R6-S01 | OPTION |
| 21 | SSD M2 2280 360GB INTEL SSDSCKJW360H6 (S3) SATA3 MLC | 6-85-D513G-Z00 | OPTION |
| 21 | SSD M2 2280 500GB CRUCIAL CT500MX500SSD4 (MX500) SATA3 MLC | 6-85-D515A-100 | OPTION |
| 21 | SSD M2 2280 256GB CRUCIAL CT250MX500SSD4 (MX500) SATA3 MLC | 6-85-D51R0-100 | OPTION |
| 21 | SSD M2 2280 512GB CRUCIAL MTFDDAV512MBF (M600) SATA3 MLC | 6-85-D515B-101 | OPTION |
| 22 | MLZ SSD MYLAR 30*17.1*PAD R5300 (24*22)MM P650RP6 | 6-40-P65P8-010 | |
| 23 | SSD M2 2280 32GB SAMSUNG KUM(K62KC,MAMA (PM87) SATA3 V2 EVO | 6-85-D515B-S01 | OPTION |
| 23 | SSD M2 2280 256GB SAMSUNG KUM(K25KUP(MAMA (PM87) SATA3 V2 EVO | 6-85-D51R6-S01 | OPTION |
| 23 | SSD M2 2280 360GB INTEL SSDSCKJW360H6 (S3) SATA3 MLC | 6-85-D513G-Z00 | OPTION |
| 23 | SSD M2 2280 500GB CRUCIAL CT500MX500SSD4 (MX500) SATA3 MLC | 6-85-D515A-100 | OPTION |
| 23 | SSD M2 2280 256GB CRUCIAL CT250MX500SSD4 (MX500) SATA3 MLC | 6-85-D51R0-100 | OPTION |
| 23 | SSD M2 2280 512GB SAMSUNG MVA(V512GB(,H-MAMA (PM9B) NVMI PCIE GEN MLC | 6-85-D515B-S02 | OPTION |
| 23 | SSD M2 2280 512GB SAMSUNG MVA(V512GB(,H-MAMA (PM9B) PCIE GEN MLC | 6-85-D515B-S03 | OPTION |
| 23 | SSD M2 2280 512GB CRUCIAL MTFDDAV512MBF (M600) SATA3 MLC | 6-85-D515B-101 | OPTION |
| 24 | GPU FAN MODULE (FORCECOND P650SE | 6-31-P6502-201 | |
| 25 | W/O HDD ASS'Y P650RP6 | 6-79-P650RP6J-010 | |
| 25 | W/HDD ASS'Y P650RP6 | 6-79-P650RP6J-020 | |
| 25 | W/O 2ND HDD ASS'Y P650RP6 | 6-79-P650RP6J-030 | |
| 25 | W/ 2ND HDD ASS'Y P650RP6 | 6-79-P650RP6J-040 | |
| 26 | SCREW M2*6.2L NI ICT NY FOR SPEAKER | 6-35-Z1120-6R2 | |
| 27 | EMI MAINBOARD SIL (37*9*0.3T) ABSORBER P650RP6 | 6-47-P65PS-010 | |
| 28 | THERMAL PAD FOR HS TFLEX3 (25*0*0.2T) P650RP6 | 6-48-P65P2-010 | |
| 29 | .SAFETY-4 SPONGE (8*7*2T) (CORECOND+GAMOO) P650RP6 | 6-47-0019A-08H | |

*Figure A - 3*
**Main Board**

# HDD

*Figure A - 4*
**HDD**

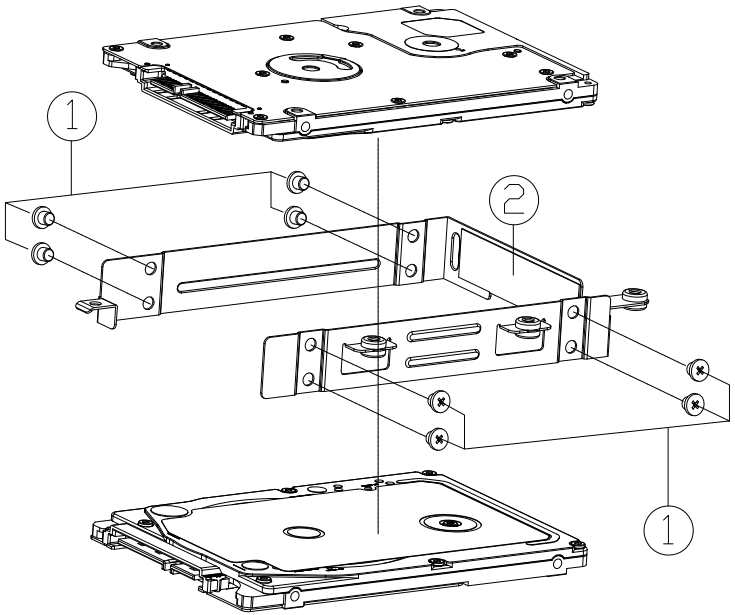


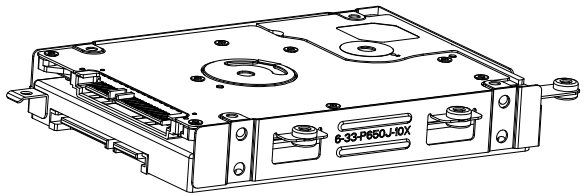


| ITEM | PART NAME | PART NO | REMARK |
|---|---|---|---|
| 1 | SCREW M3*2.5L KI NI ICT NY | 6-35-B1130-2R5 | |
| 2 | 2 IN 1 HDD BRACKET MODULE P650SE | 6-33-P650J-100 | |

# LCD

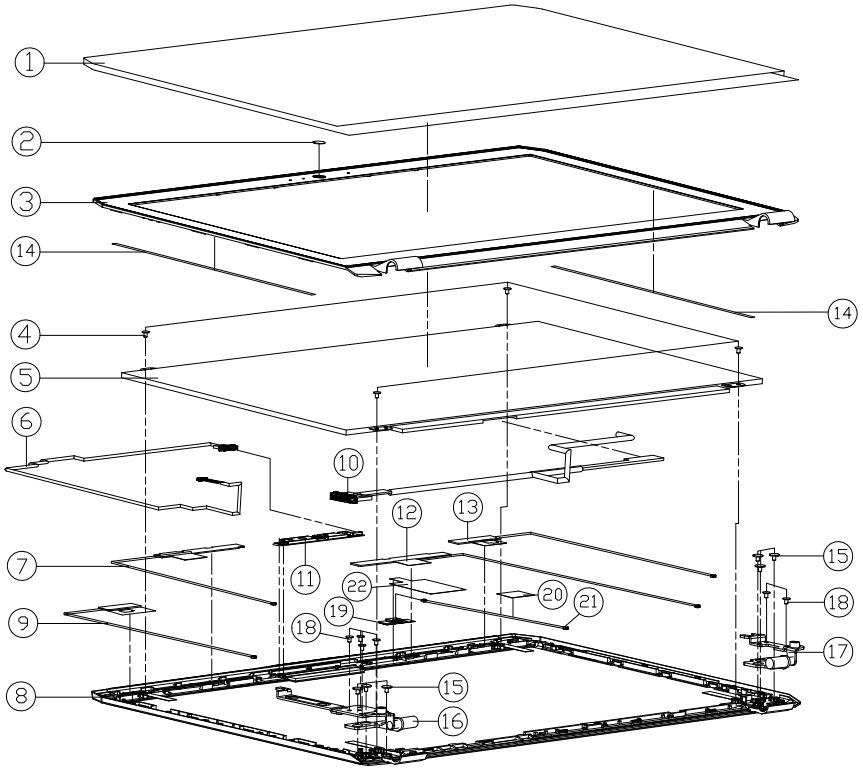


| ITEM | PART NAME | PART NO | REMARK |
|---|---|---|---|
| 1 | LCD PROTECT MYLAR BOPP N650DU | 6-40-N6508-040 | |
| 2 | CCD LENS PMMA P650SE | 6-42-P6501-010 | |
| 3 | LCD FRONT COVER MODULE P650SE | 6-39-P6501-015 | |
| 4 | .SCREW M2*2.5L KI BK/Z ICT NY 1# Ø3.5 T=0.5 | 6-35-B6120-2RD | |
| 5 | LCD 15.6" UHD (PLS/EDP) SAMSUNG LTN156FU2-H01 " SUPPORT S/W G-SYNC "LED) 28MM | 6-50-L1226-M03 | |
| 5 | LCD 15.6" FHD/IPS/EDP LG LP156WF6-SPB1 (N7) (LED)" SUPPORT S/W G-SYNC " 32MM | 6-50-LB232-L04 | |
| 5 | LCD 15.6" FHD/IPS/EDP LG LP156WF6-SPK1 (N4) (LED) 32MM | 6-50-LB232-L06 | |
| 6 | WIRE CALBE FOR CCD 535MM 30V 8PIN (CMI) P650SE | 6-43-P650T-011-1 | |
| 7 | ANTENNA IPEX4 3G4LTE JEM LTE-2 PCB 0.7G/0.8G/0.9G/1.8G/1.9G/2.1G/2.6GHZ CABLE BLACK L=800MM P650SE | 6-23-7P650-072 | 必須先選3G1/LTE-1/天線才可以選 LTE -2天線 |
| 8 | LCD BACK COVER MODULE P650SE | 6-39-P6501-027 | |
| 8 | LCD BACK COVER MODULE P651SE | 6-39-P6511-026 | |
| 9 | ANTENNA IPEX4 WLAN JEM WL2 PCB 2.4G/5G CABLE BLACK L=800MM P650SE | 6-23-7P650-052 | |
| 10 | WIRE+COAXIAL CABLE FOR EDP(SAMSUNG) 270MM 30V 30P (I) (CMI/THL CONN.JOPA02) P650SE | 6-43-P6501-032-1C | |
| 10 | WIRE CABLE FOR EDP(AUO/BOE) 270MM 30V 30P (I) (CMI/THL CONN.JOPA02) P650SE | 6-43-P6501-042-1C | |
| 11 | UVC CAMERA CHICONY FOR CRFD1W2M0S2R0U0 2M FHD DV2710 WS30C FV30U W/WHITE-LED W/2V-MIC | 6-88-W65DC-5100 | OPTION |
| 12 | ANTENNA IPEX4 3G4LTE JEM LTE-1 PCB 0.7G/0.8G/0.9G/1.8G/1.9G/2.1G/2.6GHZ L=600MM P650SE | 6-23-7P650-060 | 需要用3G4LTE 模組必選此3G1/LTE-1天線 |
| 13 | ANTENNA IPEX4 WLAN JEM WL1 PCB 2.4G/5G L=500MM P650SE | 6-23-7P650-041 | OPTION |
| 14 | FRONT COVER GLUE UV.D (NITTO 5000 180*3*0.15) FOR W655SZ | 6-40-W6551-020 | |
| 15 | SCREW M2*2L KI BK/Z ICT NY(Ø8,T=0.6) | 6-35-B6120-2RE | |
| 16 | LCD HINGE L (SK7) P650RS | 6-33-P65S1-0L1 | |
| 17 | LCD HINGE R (SK7) P650RP6 | 6-33-P65P1-0R1 | |
| 18 | .SCREW M2.5*4L KI NI ICT NY | 6-35-21125-4R0 | |
| 19 | ANTENNA IPEX4 WLAN JEM WL2 PCB 2.4G/5G CABLE BLACK L=800MM P650SE | 6-88-P8722-8100 | FOR 6-88-P872F-8100 |
| 20 | 802.11AD TAPE MYLAR(BLACK)(20*15*0.12T)P655RP6 | 6-40-P655S-P10 | FOR 6-88-P872F-8100 |
| 21 | 802.11AD CABLE 640MM MXJA02.JA640TE MURATA CONNECTER P870DM2 | 6-23-7P872-010 | FOR 6-88-P872F-8100 |
| 22 | 802.11AD COPPER FOIL P775DM2 | 6-47-P7751-211 | FOR 6-88-P872F-8100 |

*Figure A - 5*
**LCD**

# LCD (Sharp)

*Figure A - 6*
**LCD (sharp)**

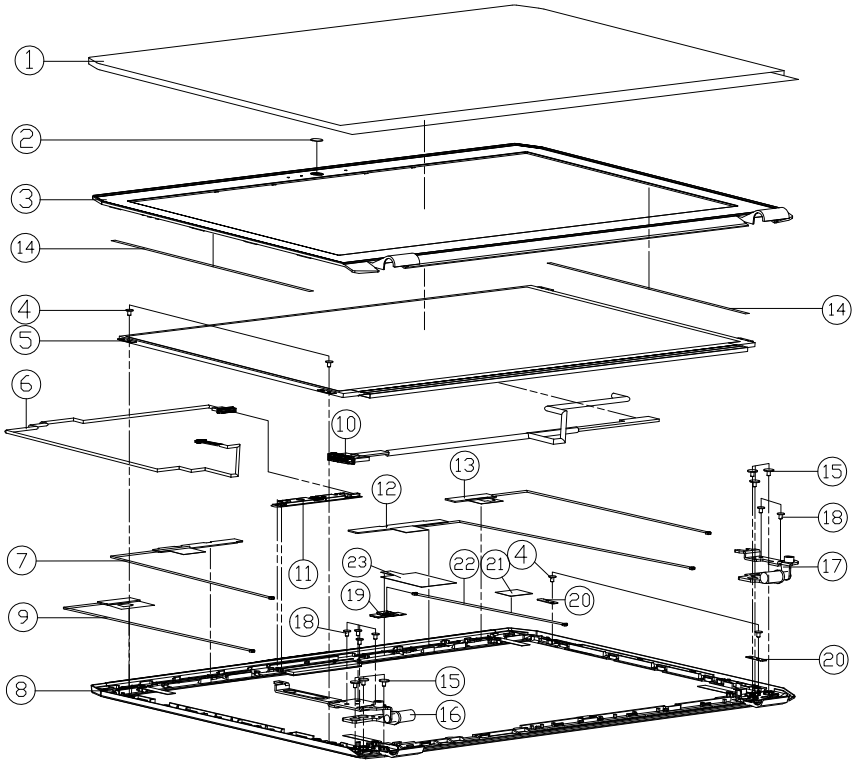


| ITEM | PART NAME | PART NO | REMARK |
|---|---|---|---|
| 1 | LCD PROTECT MYLAR BOPP N650DU | 6-40-N6508-040 | |
| 2 | CCD LENS PMMA P650SE | 6-42-P6501-010 | |
| 3 | LCD FRONT COVER MODULE P650SE | 6-39-P6501-015 | |
| 4 | .SCREW M2*2.5L KI BK/Z ICT NY 1# Ø3.5 T=0.5 | 6-35-B6120-2RD | |
| 5 | LCD 15.6" QFHD (EDP) IPS MODE SHARP LQ156D1JW04 LED 314MM F/W UPDATE | 6-50-L1231-A01 | |
| 6 | WIRE CALBE FOR CCD 535MM 30V 8PIN (CMI) P650SE | 6-43-P650T-011-1 | |
| 7 | ANTENNA IPEX4 3G+LTE JEM LTE-2 PCB 0.7G/0.8G/0.9G/1.8G/1.9G/2.1G/2.6GHZ CABLE BLACK L=800MM P650SE | 6-23-7P650-072 | 必須先選3G1/LTE-1天線<br>才可以選 LTE -2天線 |
| 8 | LCD BACK COVER MODULE P650SE | 6-39-P6501-027 | |
| 8 | LCD BACK COVER MODULE P651SE | 6-39-P6511-026 | |
| 9 | ANTENNA IPEX4 WLAN JEM WL2 PCB 2.4G/5G CABLE BLACK L=800MM P650SE | 6-23-7P650-052 | |
| 10 | WIRE<COAXIAL CABLE FOR EDP(SHARP) 270MM 30V 40P (D (CMI/TIL CONN.)0.05267) P650SE | 6-43-P6501-052-1C | |
| 11 | UVC CAMERA CHICONY FOR OOFGFIBCMR2R0LH 2M FHD UVC2.0 VGS0C FX600 W/WHITE-LED W/2B-MIC | 6-88-W65DC-5100 | OPTION |
| 12 | ANTENNA IPEX4 3G+LTE JEM LTE-1 PCB 0.7G/0.8G/0.9G/1.8G/1.9G/2.1G/2.6GHZ L=600MM P650SE | 6-23-7P650-060 | 需要H.3G/LTE 模組<br>必須此3G1/LTE-1天線 |
| 13 | ANTENNA IPEX4 WLAN JEM WL1 PCB 2.4G/5G L=500MM P650SE | 6-23-7P650-041 | OPTION |
| 14 | FRONT COVER GLUE U&D (NITTO 5000 190*3*0.15) FOR W655SZ | 6-40-W6551-020 | |
| 15 | SCREW M2*2L KI BK/Z ICT NY(Ø8,T=0.6) | 6-35-B6120-2RE | |
| 16 | LCD HINGE L (SK7) P650RS | 6-33-P65S1-0L1 | |
| 17 | LCD HINGE R (SK7) P650RP6 | 6-33-P65P1-0R1 | |
| 18 | .SCREW M2.5*4L KI NI ICT NY | 6-35-21125-4R0 | |
| 19 | ANTENNA IPEX4 WLAN JEM WL2 PCB 2.4G/5G CABLE BLACK L=800MM P650SE | 6-88-P8722-8100 | FOR 6-88-P872F-B100 |
| 20 | LCD PANEL BRACKET (SECC) P650SE | 6-33-P6501-010 | |
| 21 | 802.11AD TAPE MYLAR(BLACK)(20*15*0.12T)P655RP6 | 6-40-P655S-P10 | FOR 6-88-P872F-B100 |
| 22 | 802.11AD CABLE 640MM MX.JA02.J64400TE MURATA CONNECTER P870DM2 | 6-23-7P872-010 | FOR 6-88-P872F-B100 |
| 23 | 802.11AD COPPER FOIL P775DM2 | 6-47-P7751-211 | FOR 6-88-P872F-B100 |

# Appendix B: Schematic Diagrams

This appendix has circuit diagrams of the ***P650RP6(-G) / P651RP6(-G)*** notebook's PCB's. The following table indicates where to find the appropriate schematic diagram.

| Diagram - Page | Diagram - Page | Diagram - Page | Diagram - Page |
|---|---|---|---|
| *System Block Diagram - Page B - 2* | *Frame Buffer Partition A_B - Page B - 23* | *KBC IT8587 - Page B - 44* | *VCC_Core & VCCSA - Page B - 65* |
| *Processor 1/7 - Page B - 3* | *GPU Frame Buffer Partition - Page B - 24* | *USB Charger - Page B - 45* | *VCore Output Stage - Page B - 66* |
| *Processor 2/7 - Page B - 4* | *Frame Buffer Partition C - Page B - 25* | *USB - Page B - 46* | *VCCGT - Page B - 67* |
| *Processor 3/7 - Page B - 5* | *Frame Buffer Partition C_D - Page B - 26* | *M.2 WLAN+BT, PCIE4X SSD - Page B - 47* | *VCCGT Output Stage - Page B - 68* |
| *Processor 4/7 - Page B - 6* | *GPU Decoupling - Page B - 27* | *M.2 3G/LTE - Page B - 48* | *LAN RTL8411, Card Reader - Page B - 69* |
| *Processor 5/7 - Page B - 7* | *GPU Decoupling 2 - Page B - 28* | *Realtek ALC892 - Page B - 49* | *AR_TBT - Page B - 70* |
| *Processor 6/7 - Page B - 8* | *Straps and XTAL - Page B - 29* | *TPA2008D2 - Page B - 50* | *AR_Power - Page B - 71* |
| *Processor 7/7 - Page B - 9* | *IFP I/O Interface - Page B - 30* | *TPM, CCD, TP - Page B - 51* | *TPS65982, Type C - Page B - 72* |
| *DDR CHA SO-DIMM_0 - Page B - 10* | *Misc - GPIO, I2C and ROM - Page B - 31* | *Fan, LID, KB LED - Page B - 52* | *TPS65982, Type A - Page B - 73* |
| *DDR CHA SO-DIMM_1 - Page B - 11* | *NVIDIA Power Sequence - Page B - 32* | *Connector - Page B - 53* | *USB, Type A - Page B - 74* |
| *DDR CHB SO-DIMM_0 - Page B - 12* | *GPU NVVDD, FBVDDQ - Page B - 33* | *DDR 1.2V / 0.6VS - Page B - 54* | *Audio Board_3D AMP - Page B - 75* |
| *DDR CHB SO-DIMM_1 - Page B - 13* | *GPU GND - Page B - 34* | *VDD3, VDD5 - Page B - 55* | *HDD Board - Page B - 76* |
| *Panel, Inverter - Page B - 14* | *PCH 1/9 - Page B - 35* | *5V, 5VS, 3.3V, 3.3VS, 3.3VA - Page B - 56* | *Power Board - Page B - 77* |
| *Redriver - Page B - 15* | *PCH 2/9 - Page B - 36* | *Power 1.0V, VCCIO - Page B - 57* | *LED Board - Page B - 78* |
| *Mini DP Port E - Page B - 16* | *PCH 3/9 - Page B - 37* | *AC_In, Charger - Page B - 58* | *Click Board - Page B - 79* |
| *Mini DP Port F - Page B - 17* | *PCH 4/9 - Page B - 38* | *1.0DX_VCCSTG/VCCSFR_OC/2.5V - Page B - 59* | *Finger Sensor Board - Page B - 80* |
| *HDMI Connector - Page B - 18* | *PCH 5/9 - Page B - 39* | *1V8_RUN/AON, NV3V3 - Page B - 60* | *Power Board - Page B - 81* |
| *VGA PCI Express - Page B - 19* | *PCH 6/9 - Page B - 40* | *NVVDD Phase 1 & 2 - Page B - 61* | *LED Board - Page B - 82* |
| *VGA Frame Buffer Partition - Page B - 20* | *PCH 7/9 - Page B - 41* | *NVVDDS - Page B - 62* | |
| *Frame Buffer Partition A - Page B - 21* | *PCH 8/9 - Page B - 42* | *PEX_VDD - Page B - 63* | |
| *Frame Buffer Partition B - Page B - 22* | *PCH 9/9 - Page B - 43* | *FBVDDQ - Page B - 64* | |

*Table B - 1*
**SCHEMATIC DIAGRAMS**

**Version Note**

The schematic diagrams in this chapter are based upon version 6-7P-P65P9-002. If your mainboard (or other boards) are a later version, please check with the Service Center for updated diagrams (if required).

# System Block Diagram



**Sheet 1 of 81**
**System Block Diagram**

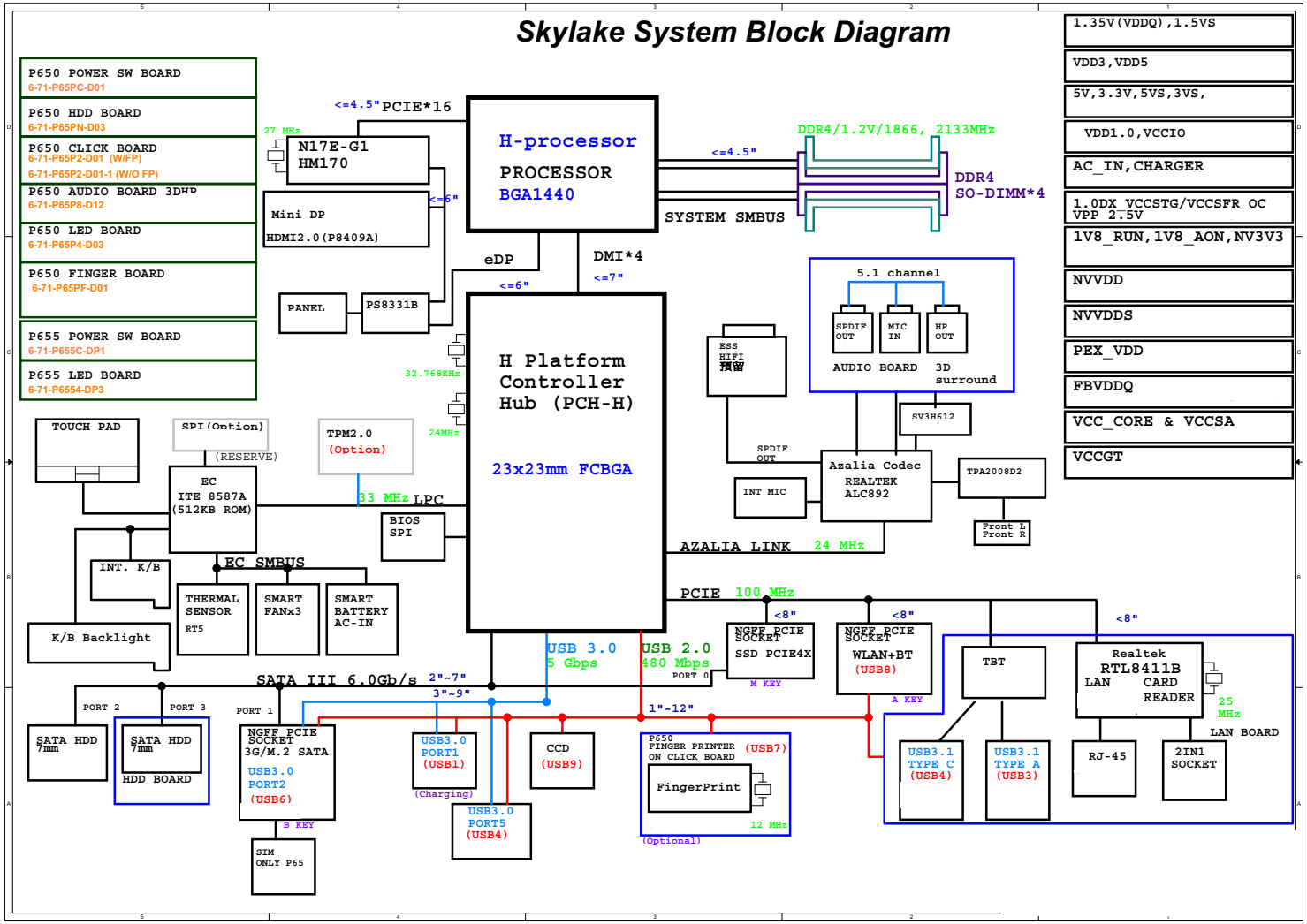

# Processor 1/7

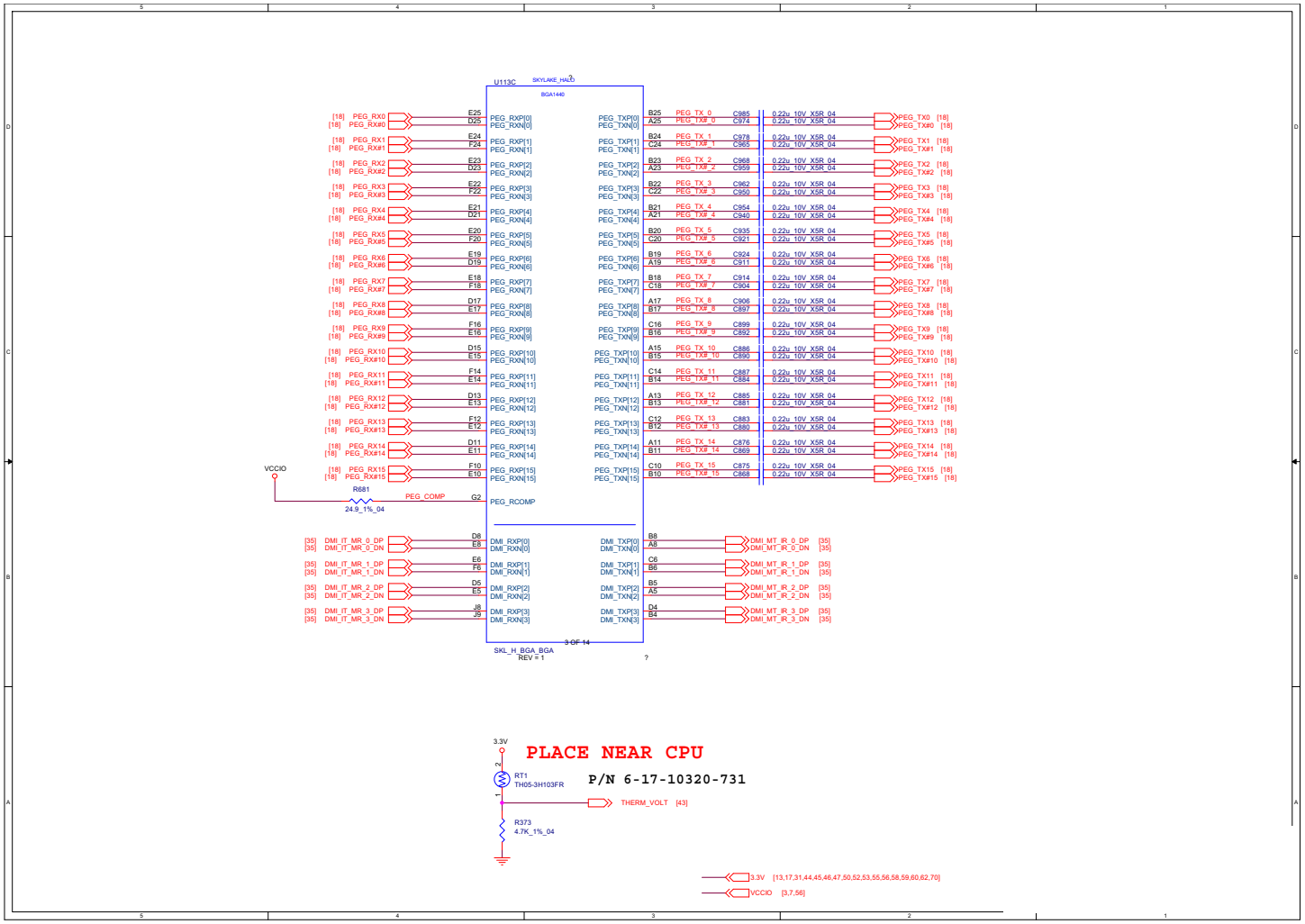


Sheet 2 of 81
Processor 1/7

# Processor 2/7



**Sheet 3 of 81**
**Processor 2/7**

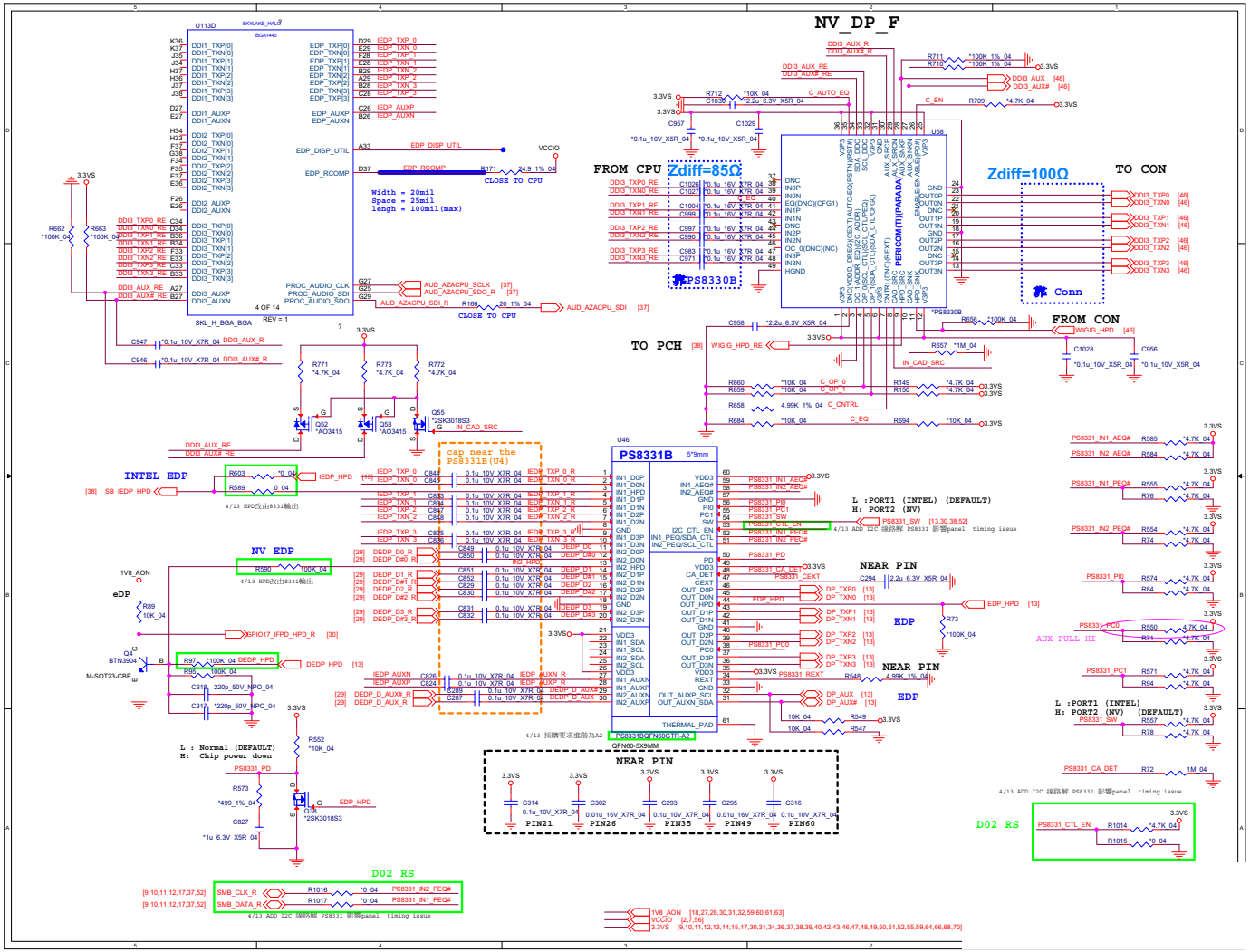

# Processor 3/7

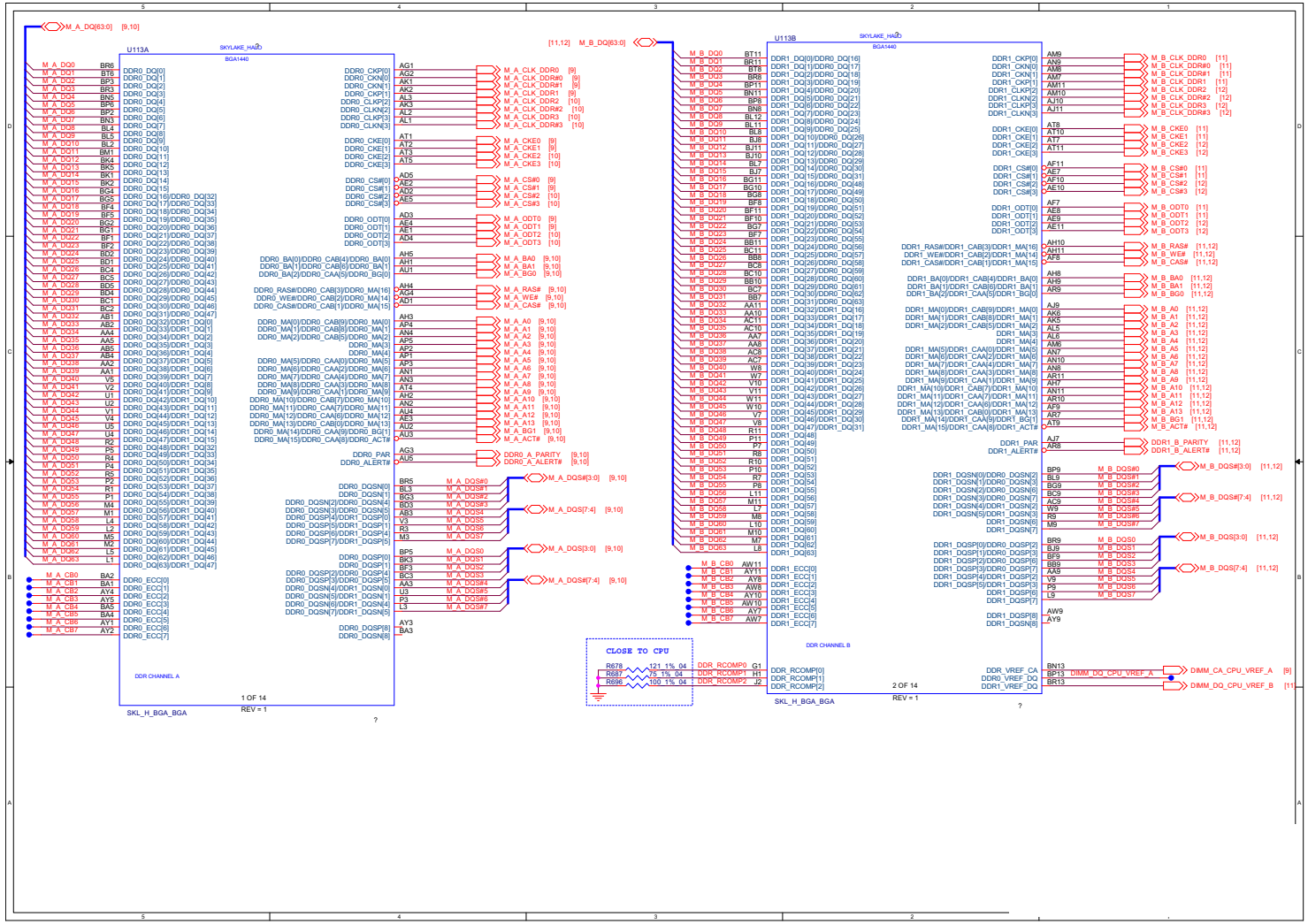


Sheet 4 of 81
Processor 3/7

# Processor 4/7



**Sheet 5 of 81**
**Processor 4/7**

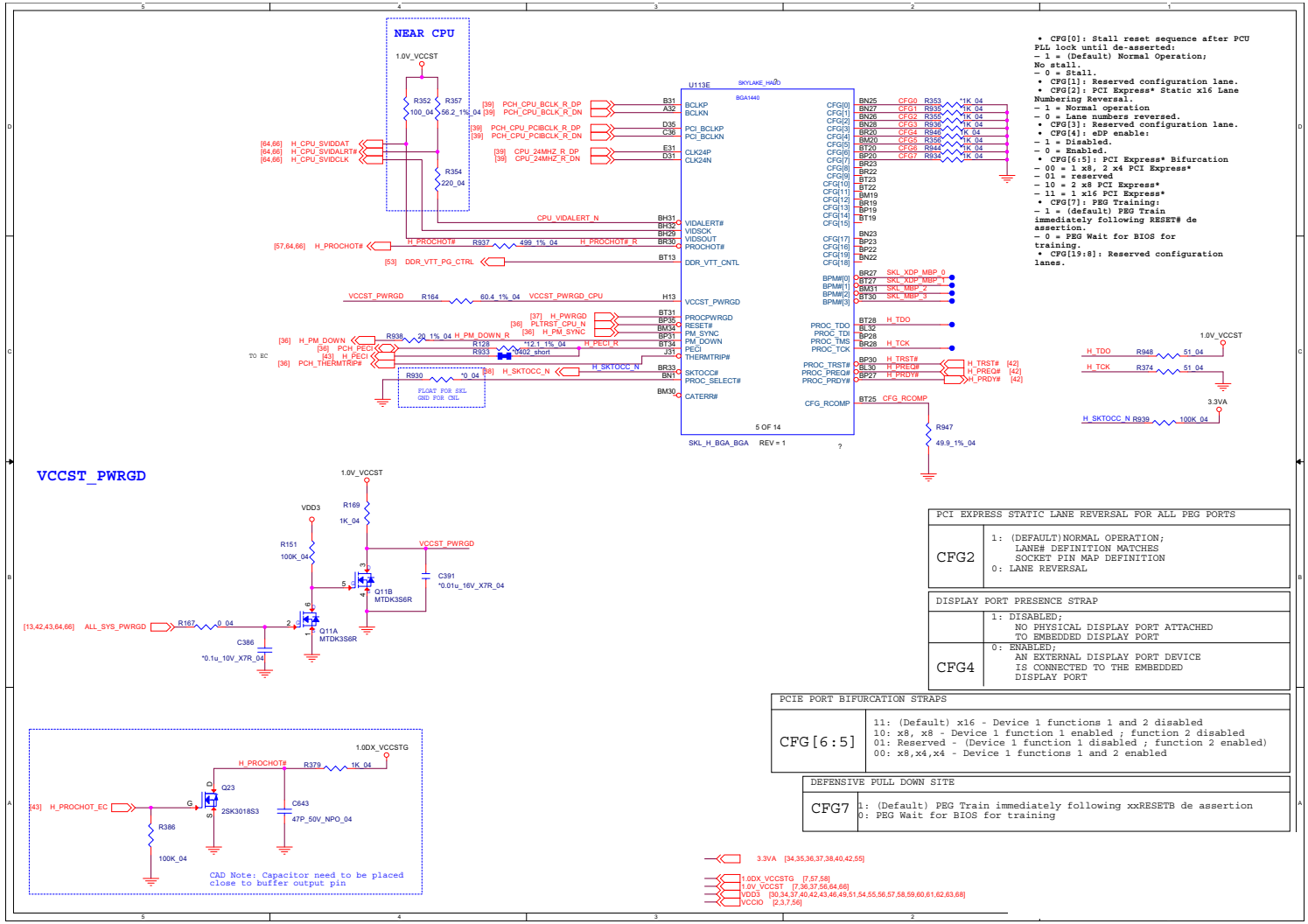

# Processor 5/7

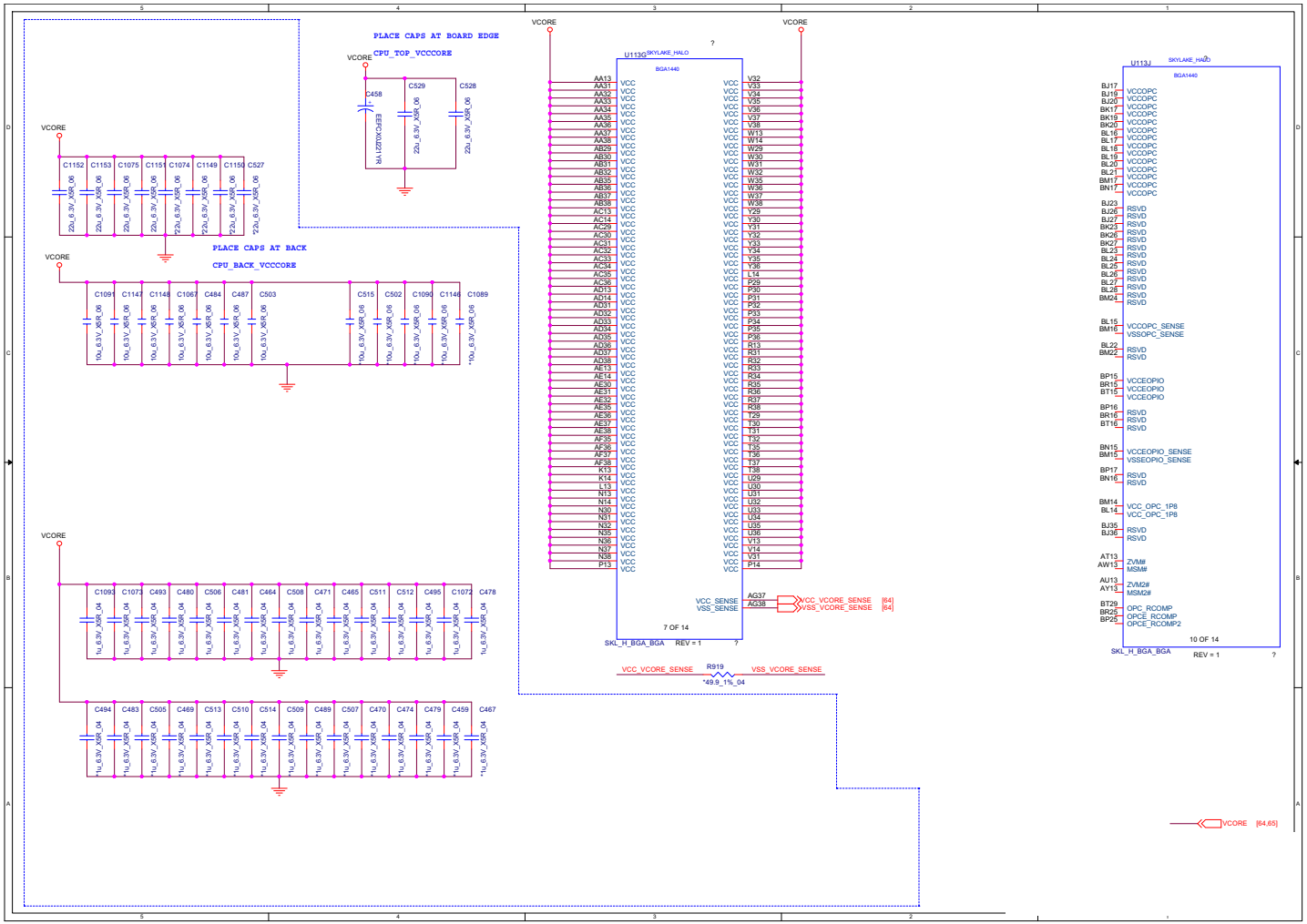


Sheet 6 of 81
Processor 5/7

# Processor 6/7



**Sheet 7 of 81**
**Processor 6/**

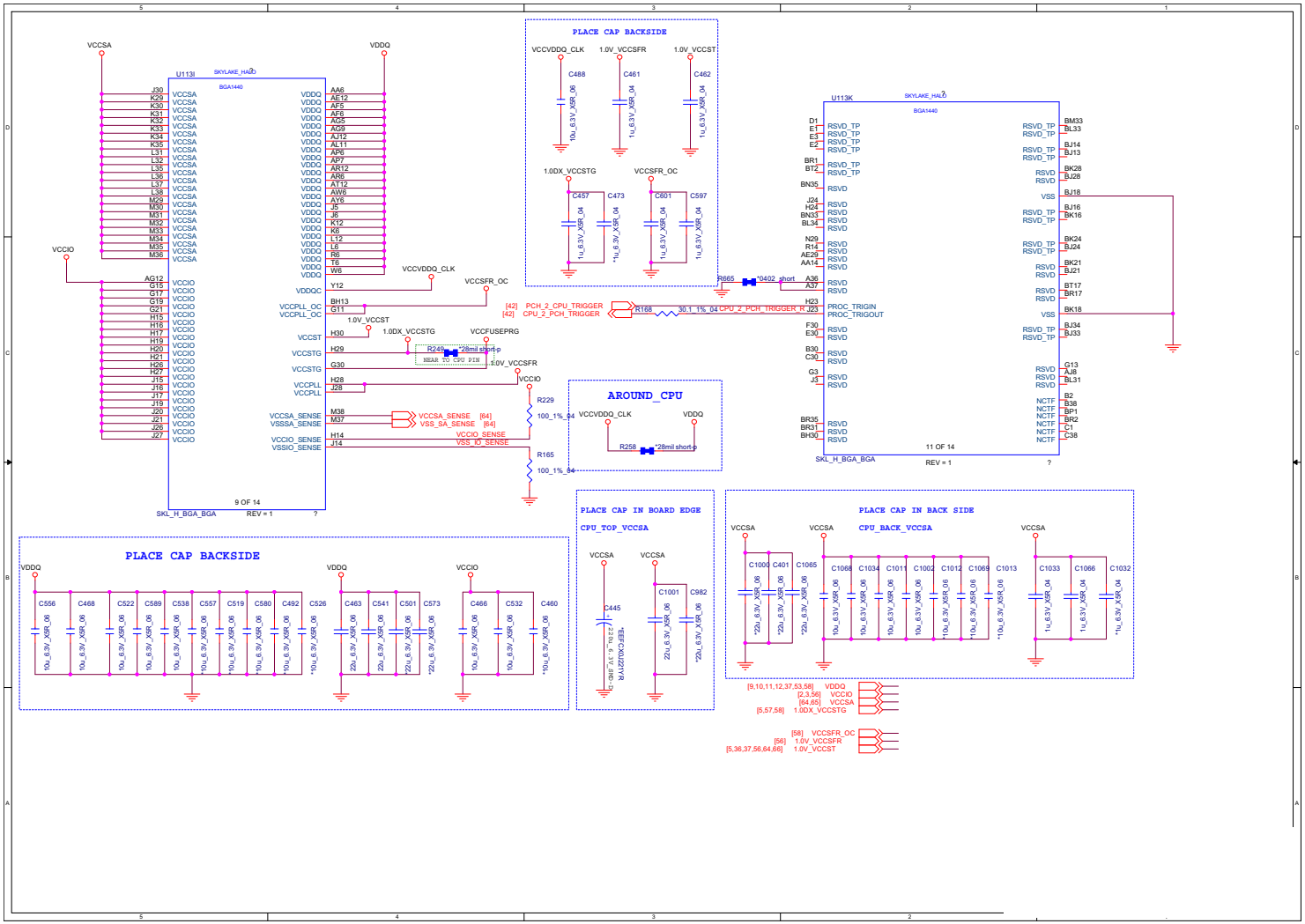

# Processor 7/7

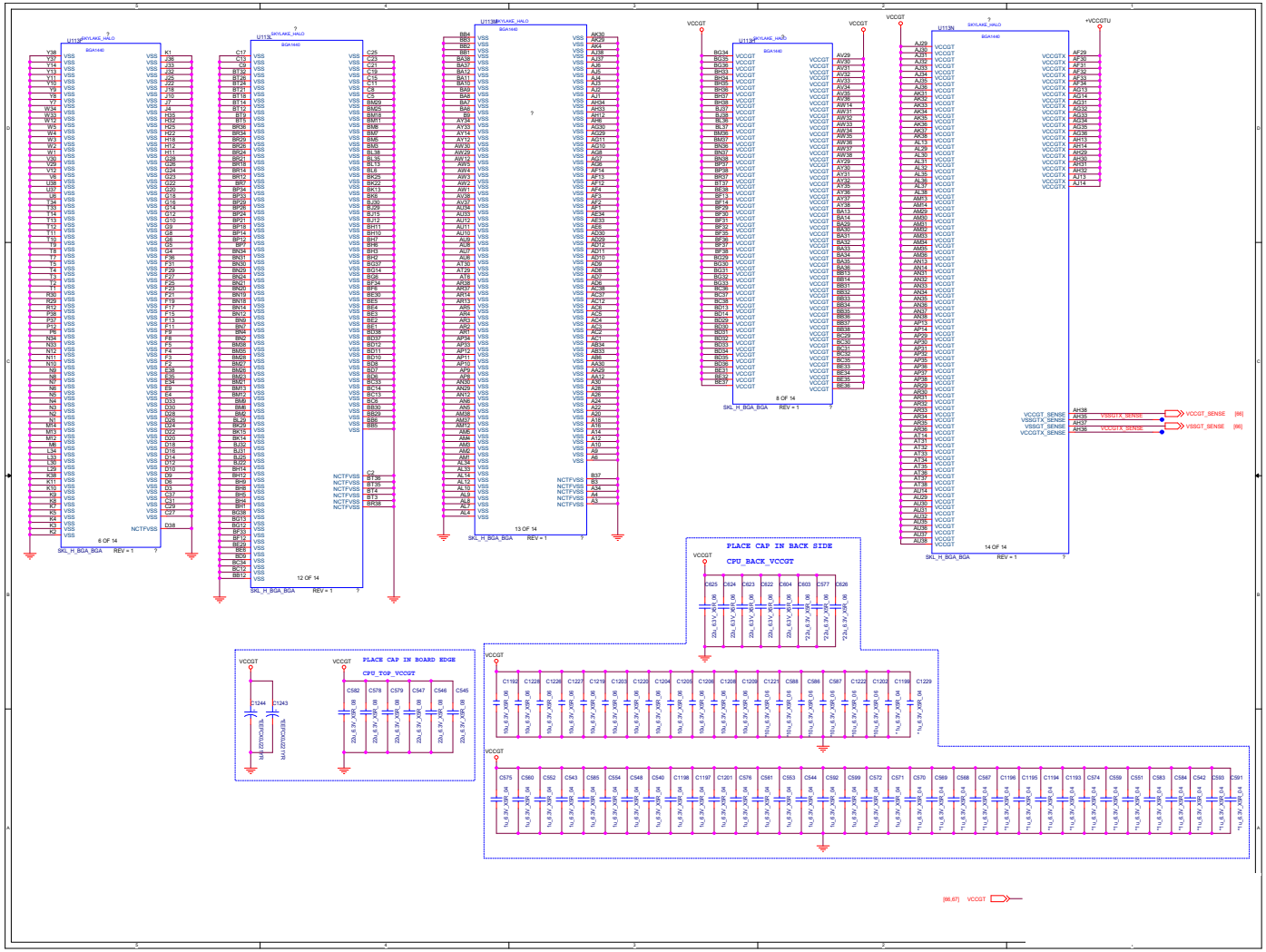


Sheet 8 of 81
Processor 7/7

# DDR CHA SO-DIMM_0



**Sheet 9 of 81**
**DDR CHA SO-DIMM_0**

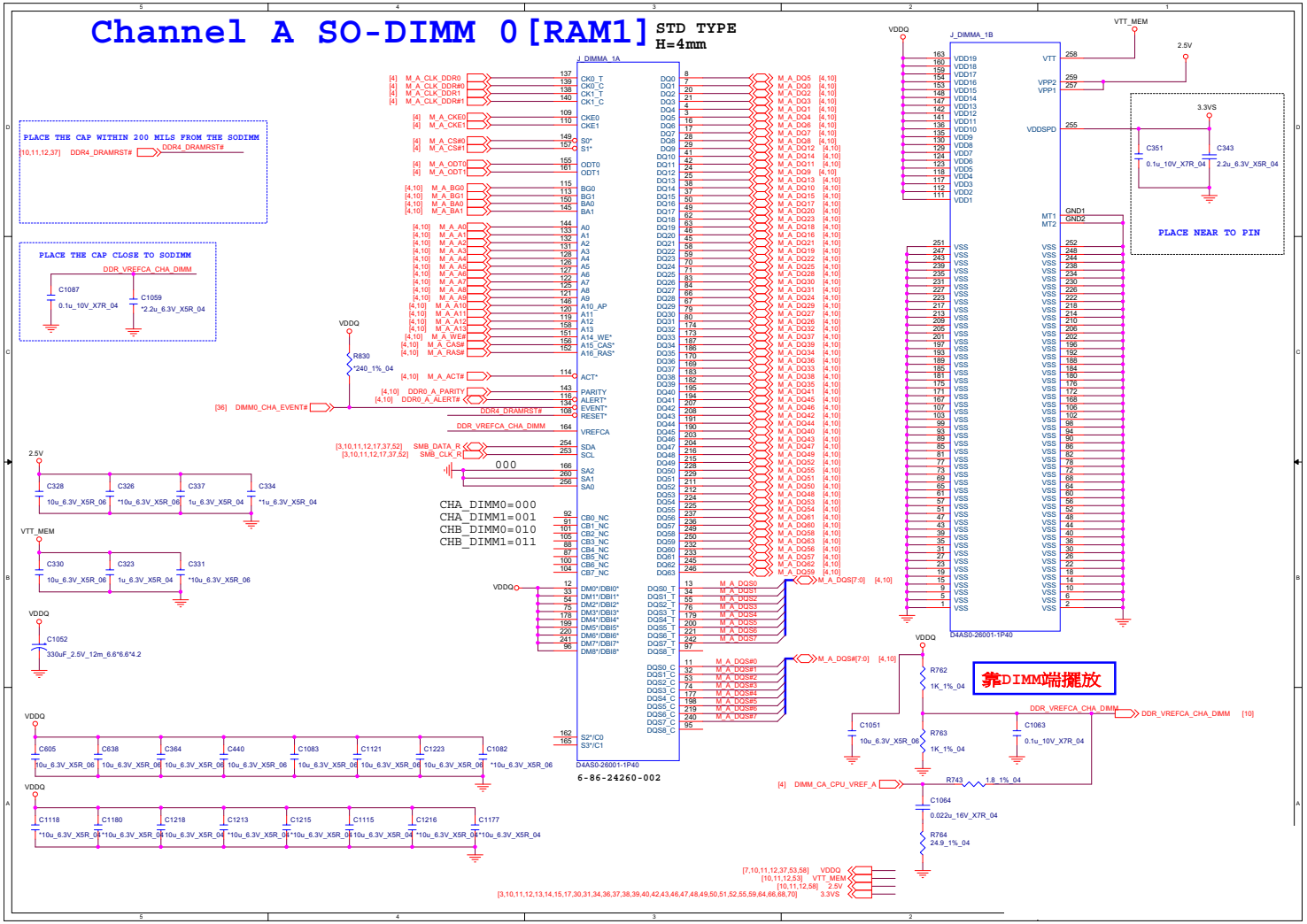

# DDR CHA SO-DIMM_1

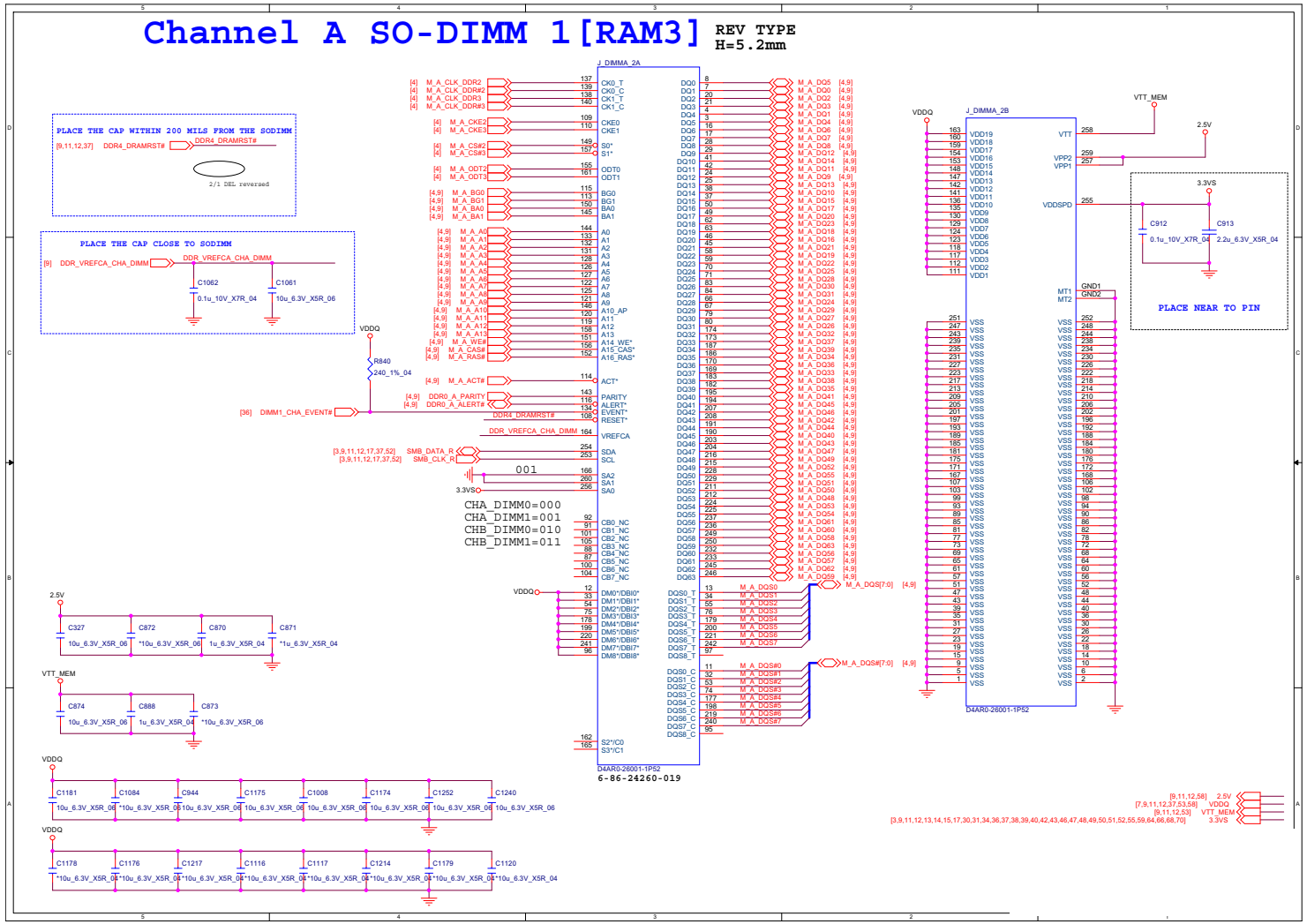


Sheet 10 of 81
DDR CHA SO-DIMM_1

# DDR CHB SO-DIMM_0



**Sheet 11 of 81**
**DDR CHB SO-DIMM_0**

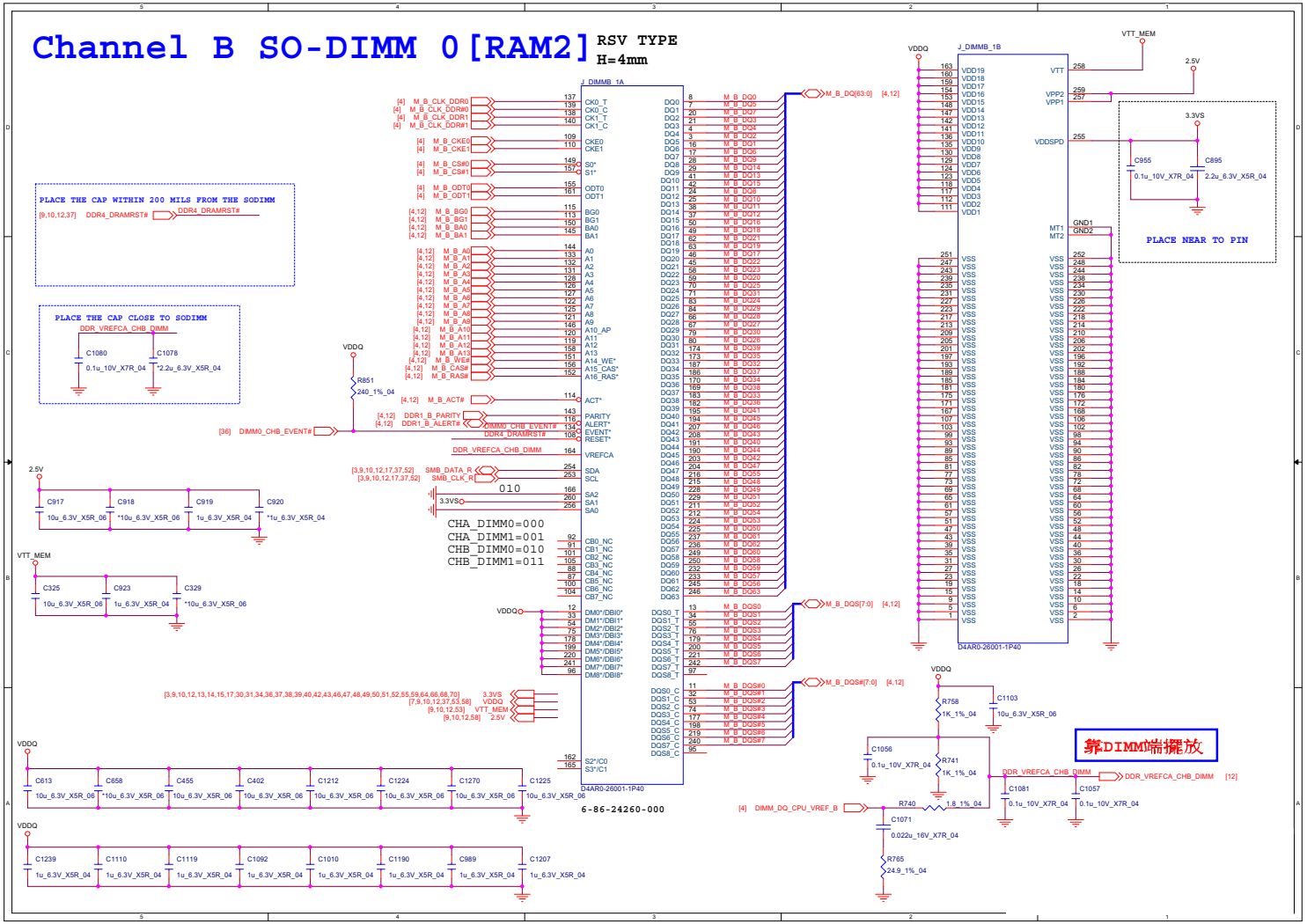

# DDR CHB SO-DIMM_1

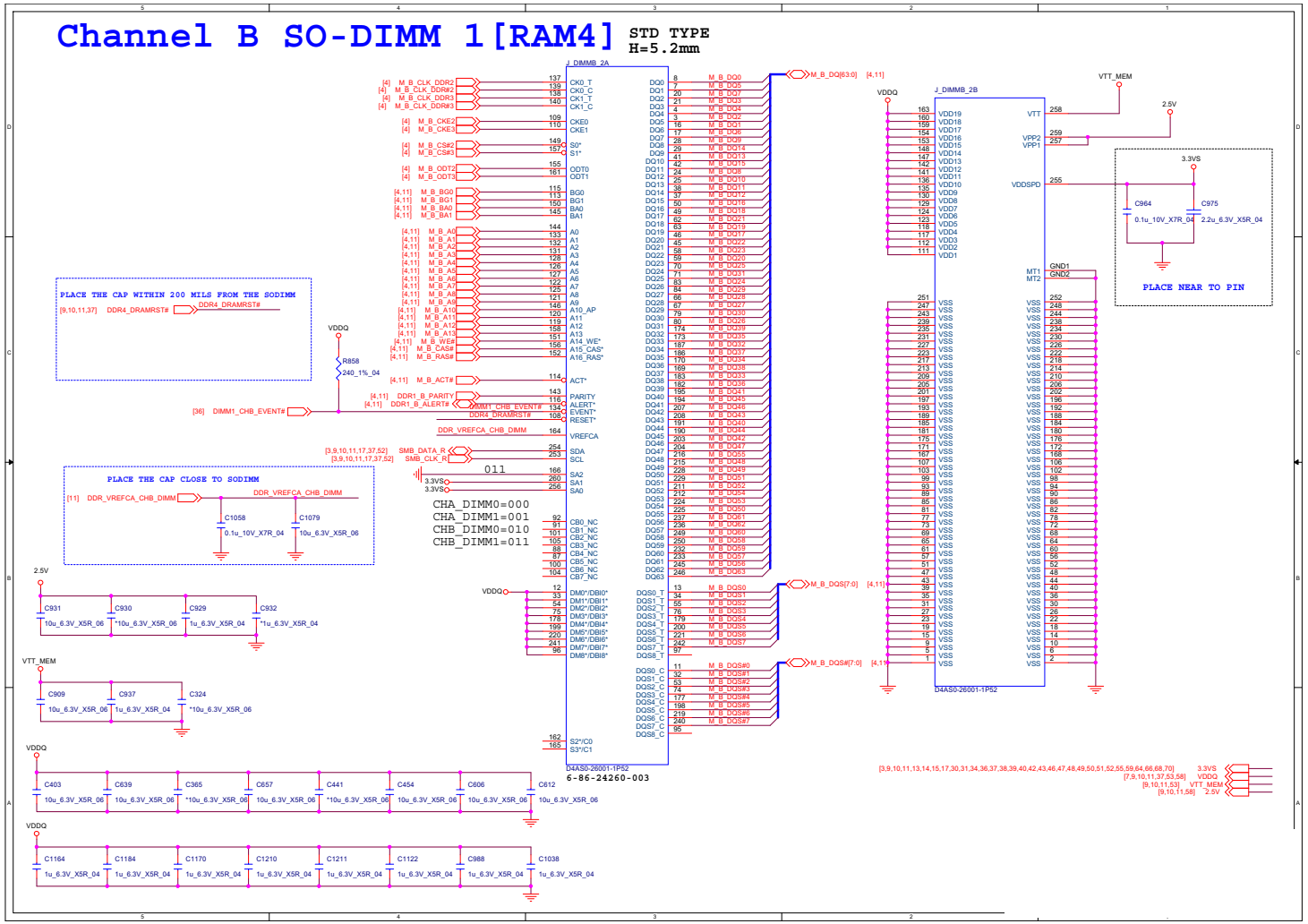


Sheet 12 of 81
DDR CHB SO-DIMM_1

# Panel, Inverter



**Sheet 13 of 81**
**Panel, Inverter**

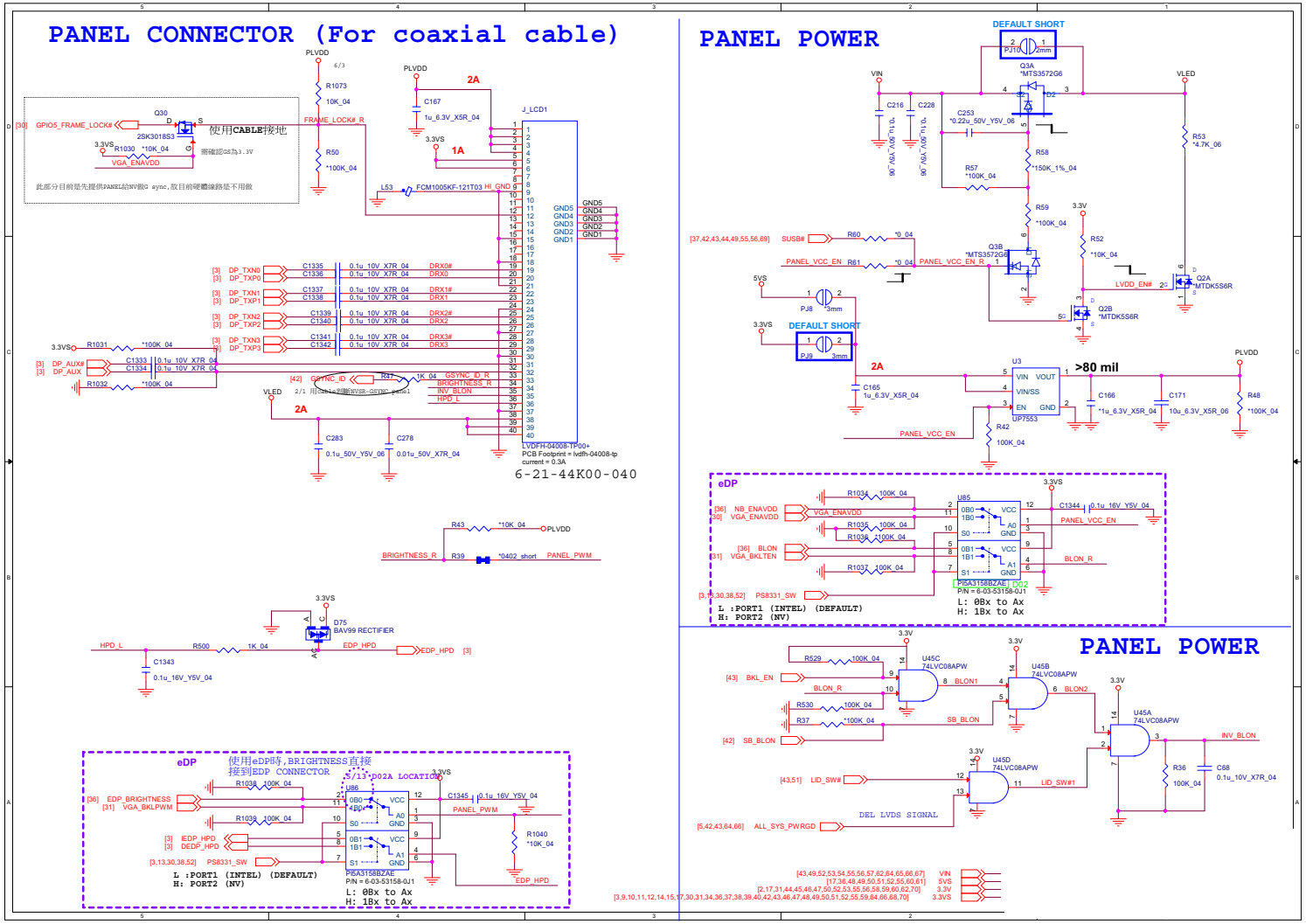

# Redriver

| | SN75DP130SS | PS8330B |
|---|---|---|
| pin2 | 1uF GND | 2.2uF GND |
| pin3 | *10K VCC, *10K GND | GND |
| pin4 | x | *4.7K VCC, *4.7K GND |
| pin5 | x | *4.7K VCC, *4.7K GND |
| pin7 | x | 4.99K GND |
| pin35 | 0.22uF GND | 10K VCC, 2.2uF GND |
| pin40 | x | *4.7K VCC, *4.7K GND |
| pin46 | x | x |

| | | TI 6-02-75130-BQ0 | PARADA 6-03-08330-030 |
|---|---|---|---|
| | U39 | SN75DP130SSRGZR | PS8330B |
| pin2 | C826 | 1u_6.3V_X5R_04 | 2.2u_6.3V_X5R_04 |
| pin3 | R618 | *10K_04 | 0_04 |
| pin7 | R627 | X | 4.99K_1%_04 |
| pin35 | R619 | X | 10K_04 |
| pin35 | C828 | 0.22u_10V_X5R_04 | 2.2u_6.3V_X5R_04 |
| | U44 | SN75DP130SSRGZR | PS8330B |
| pin2 | C886 | 1u_6.3V_X5R_04 | 2.2u_6.3V_X5R_04 |
| pin3 | R694 | *10K_04 | 0_04 |
| pin7 | R726 | X | 4.99K_1%_04 |
| pin35 | R691 | X | 10K_04 |
| pin35 | C890 | 0.22u_10V_X5R_04 | 2.2u_6.3V_X5R_04 |

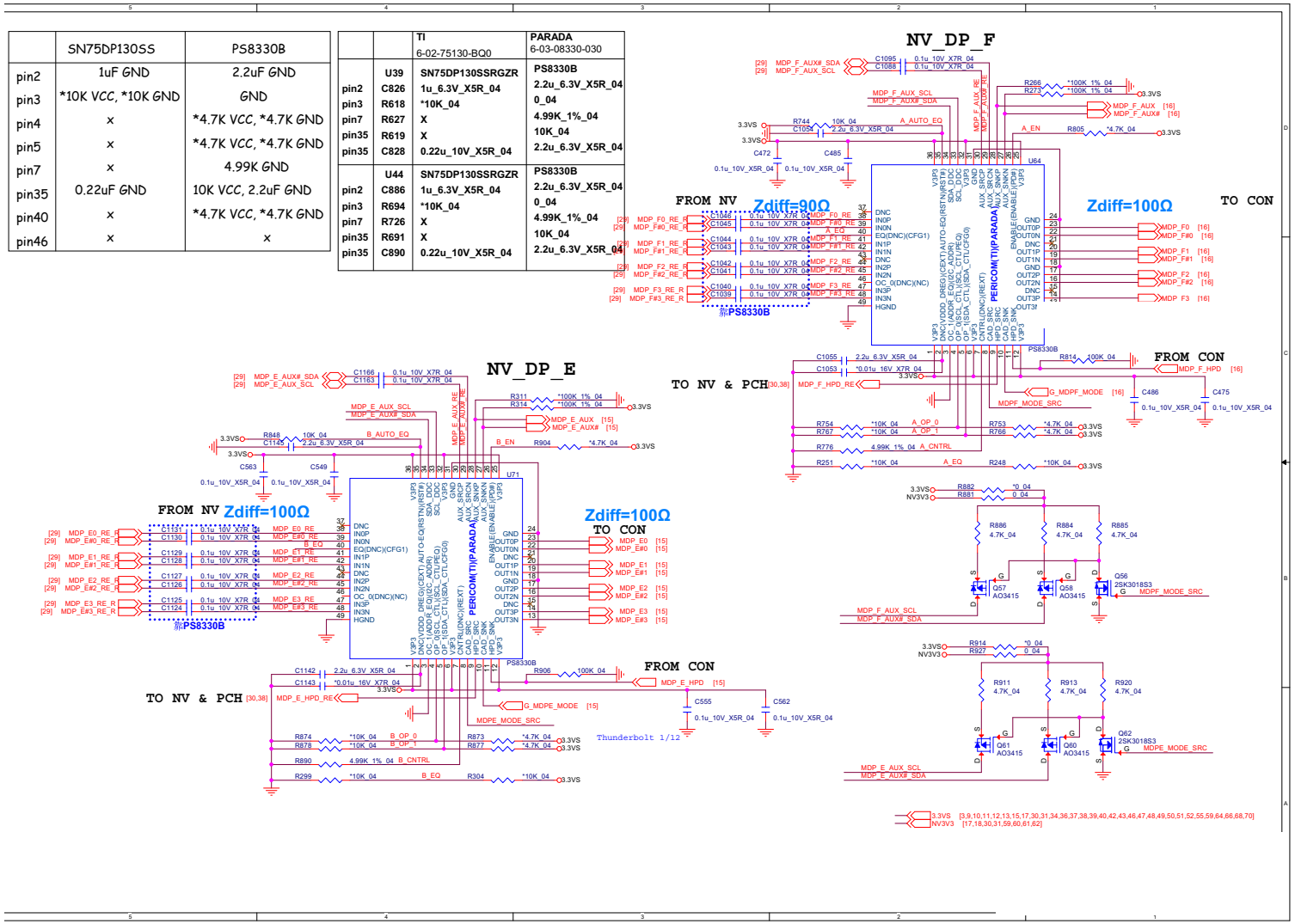


Sheet 14 of 81
Redriver

# Mini DP Port E



**Sheet 15 of 81**
**Mini DP Port E**

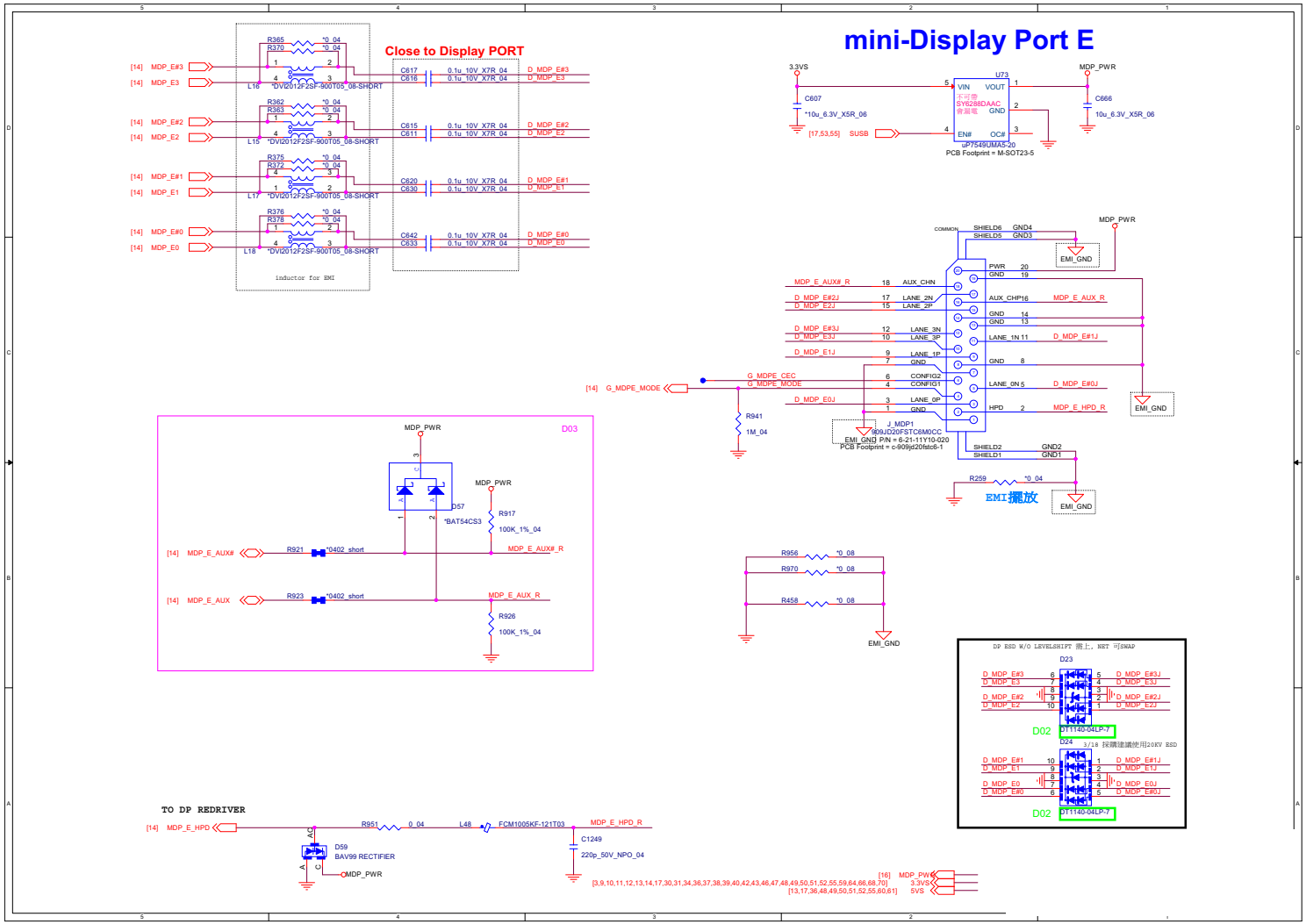

# Mini DP Port F

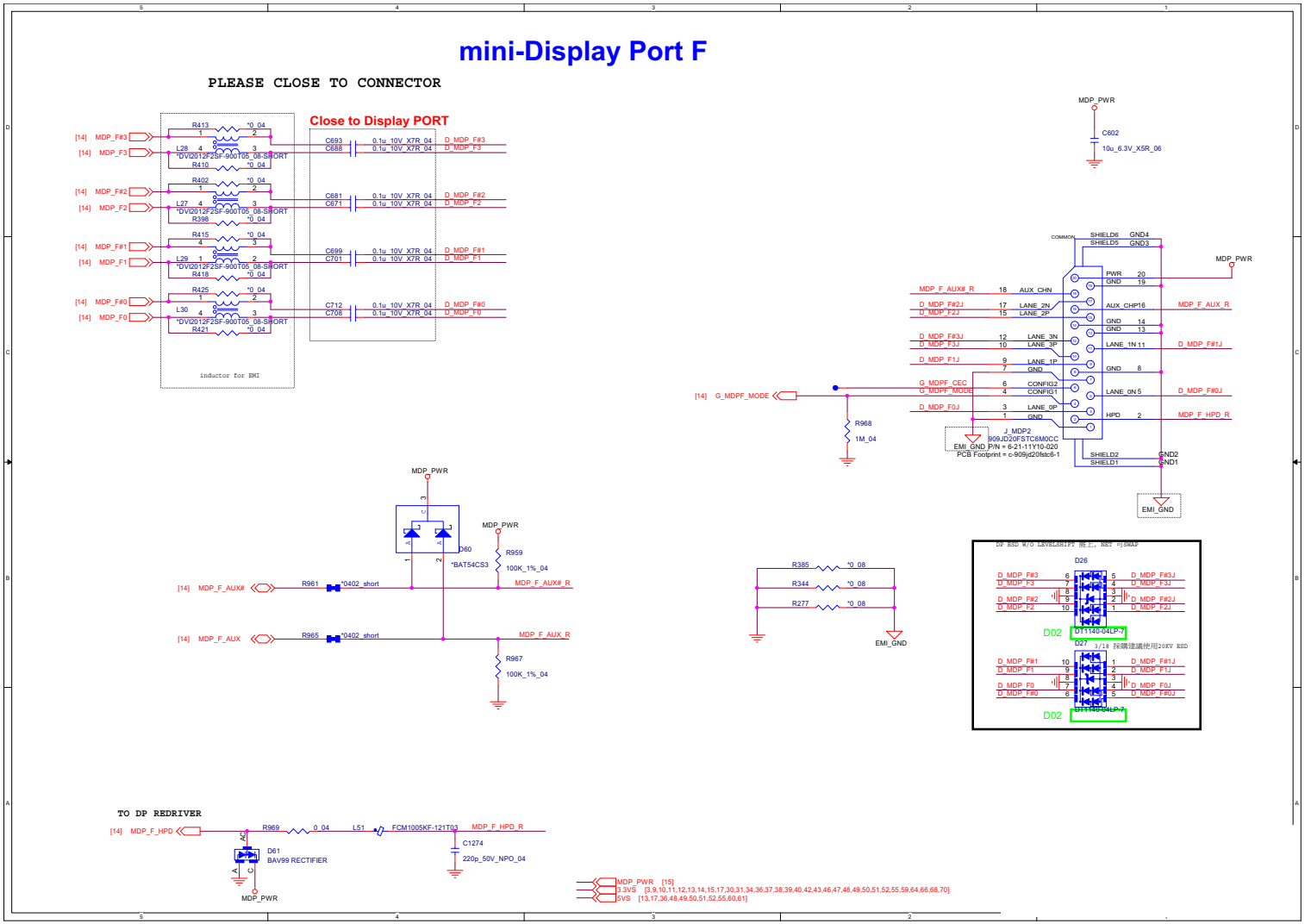


Sheet 16 of 81
Mini DP Port F

# HDMI Connector



**Sheet 17 of 81**
**HDMI Connector**

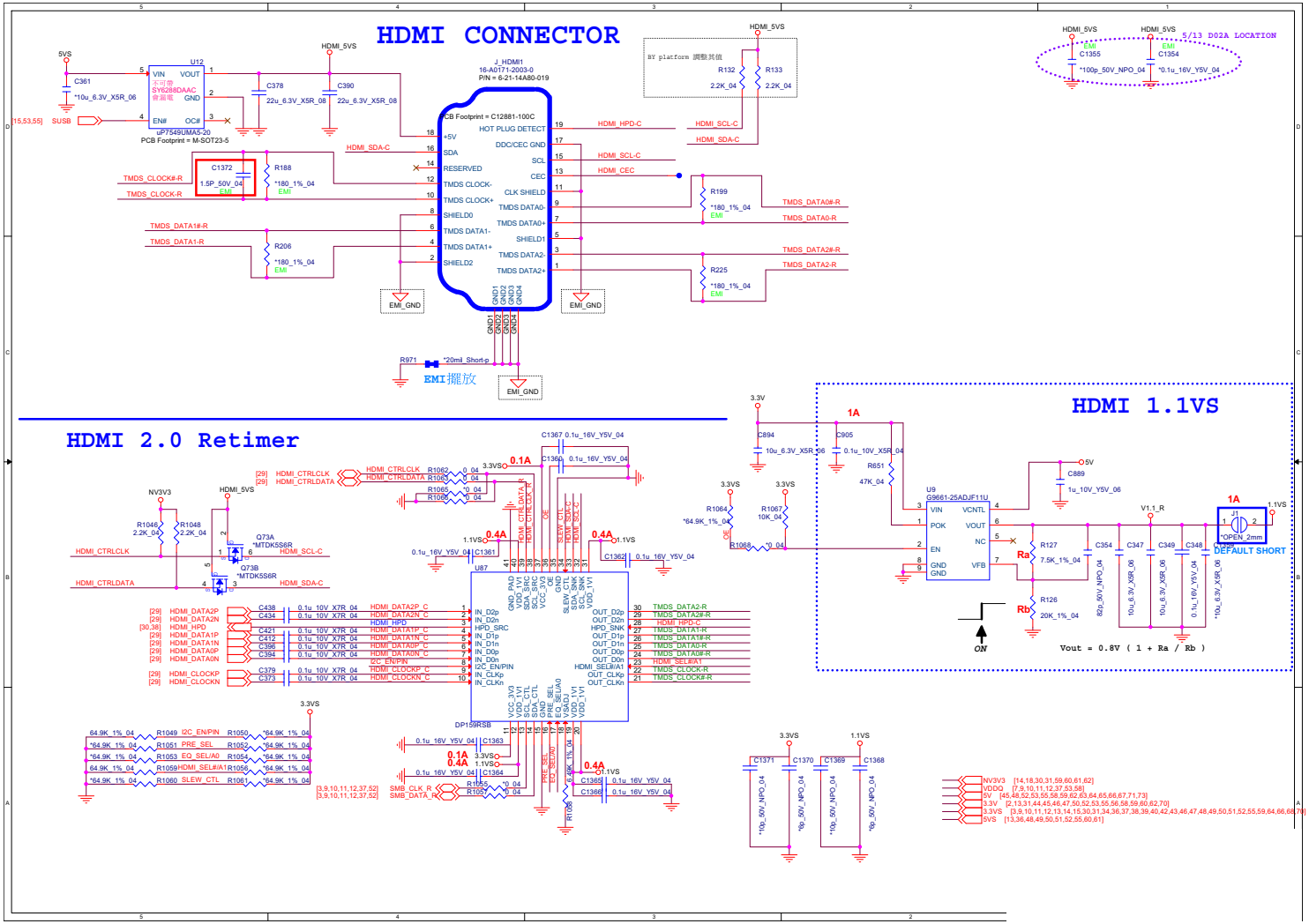

# VGA PCI Express

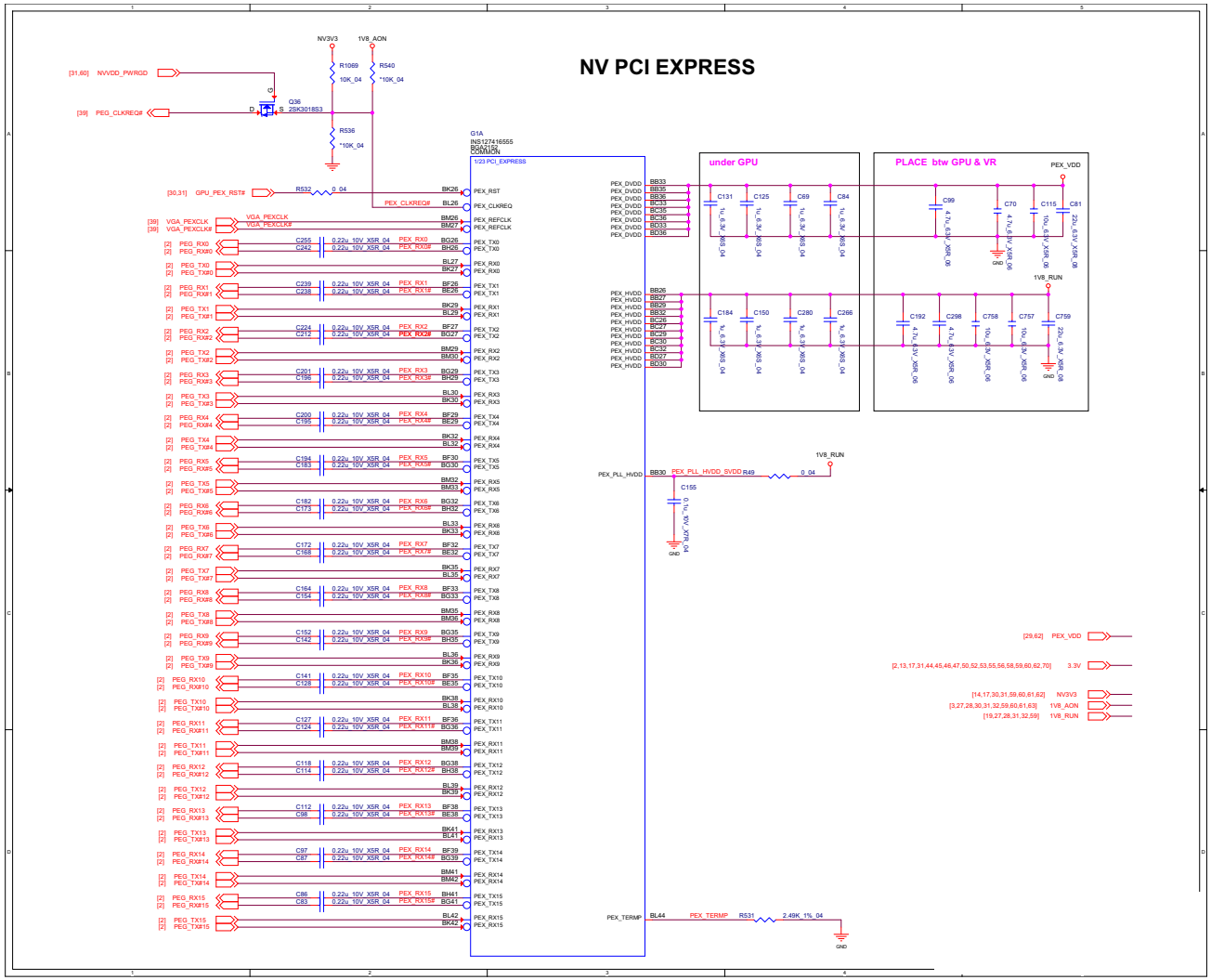


Sheet 18 of 81
VGA PCI Express

# VGA Frame Buffer Partition



**Sheet 19 of 81**
**VGA Frame Buffer Partition**

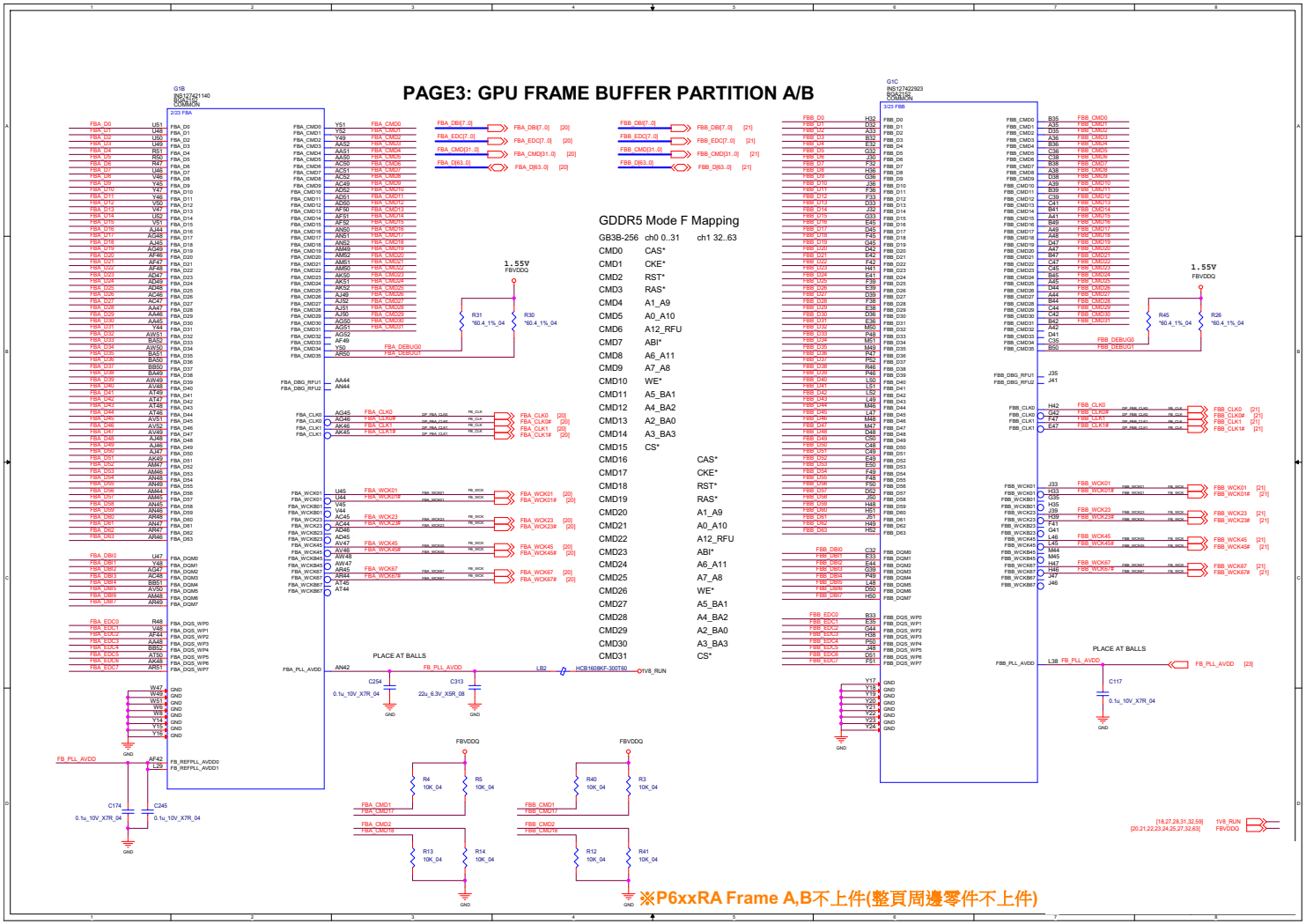

# Frame Buffer Partition A

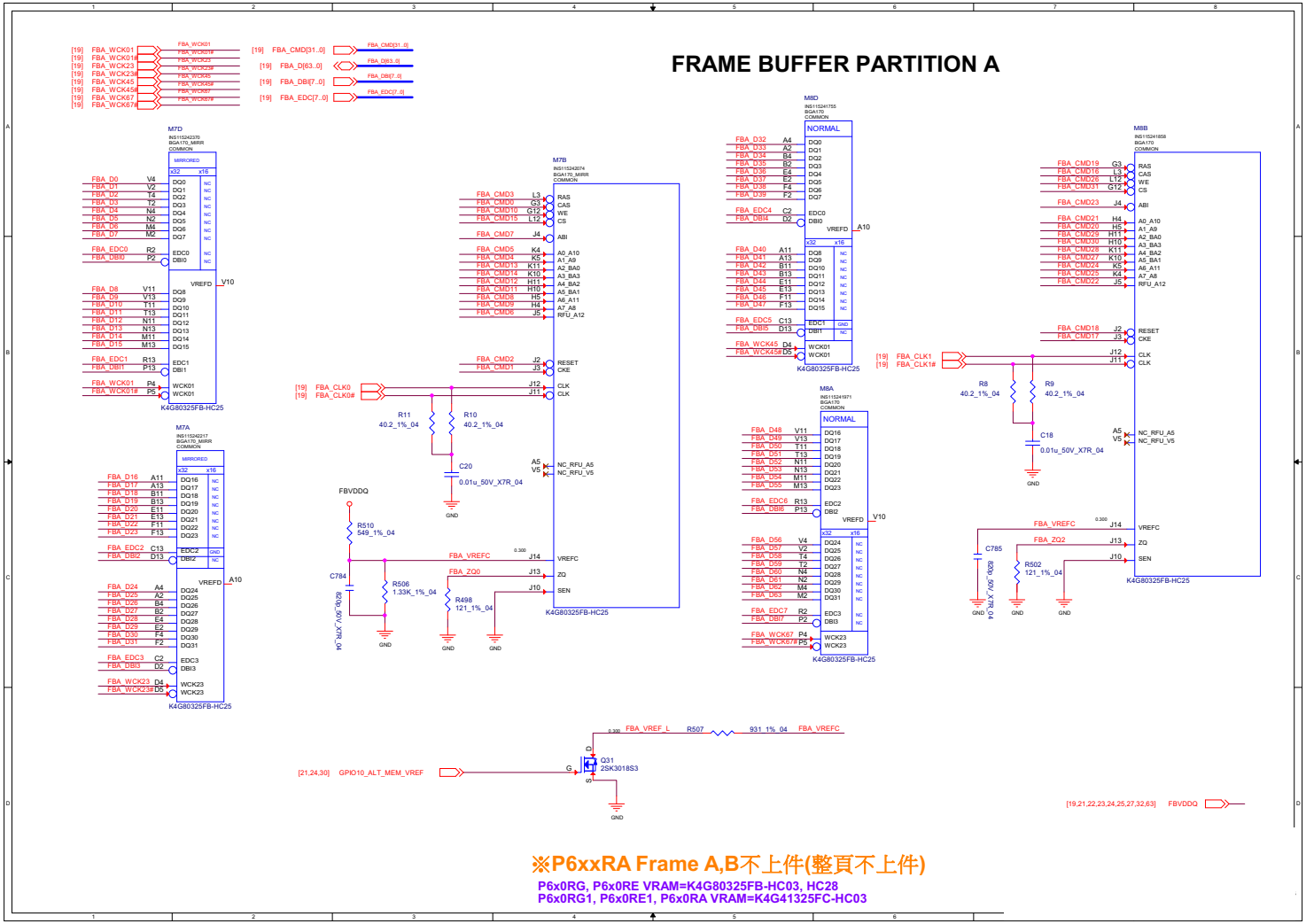


※P6xxRA Frame A,B不上件(整頁不上件)

P6x0RG, P6x0RE VRAM=K4G80325FB-HC03, HC28
P6x0RG1, P6x0RE1, P6x0RA VRAM=K4G41325FC-HC03

Sheet 20 of 81
Frame Buffer
Partition A

B.Schematic Diagrams

# Frame Buffer Partition B



**Sheet 21 of 81**
**Frame Buffer Partition B**

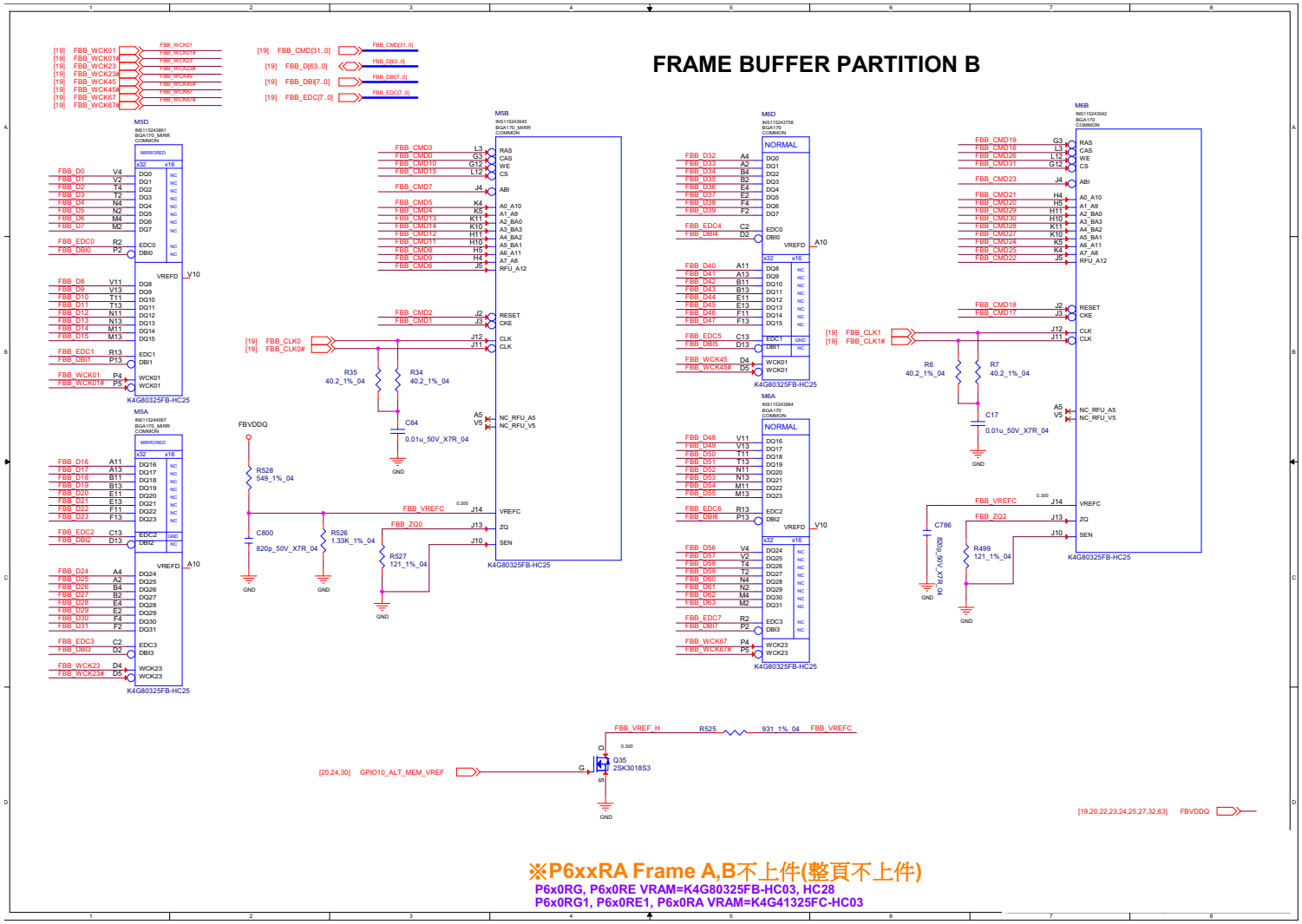


※P6xxRA Frame A,B不上件(整頁不上件)
P6x0RG, P6x0RE VRAM=K4G80325FB-HC03, HC28
P6x0RG1, P6x0RE1, P6x0RA VRAM=K4G41325FC-HC03

# Frame Buffer Partition A_B

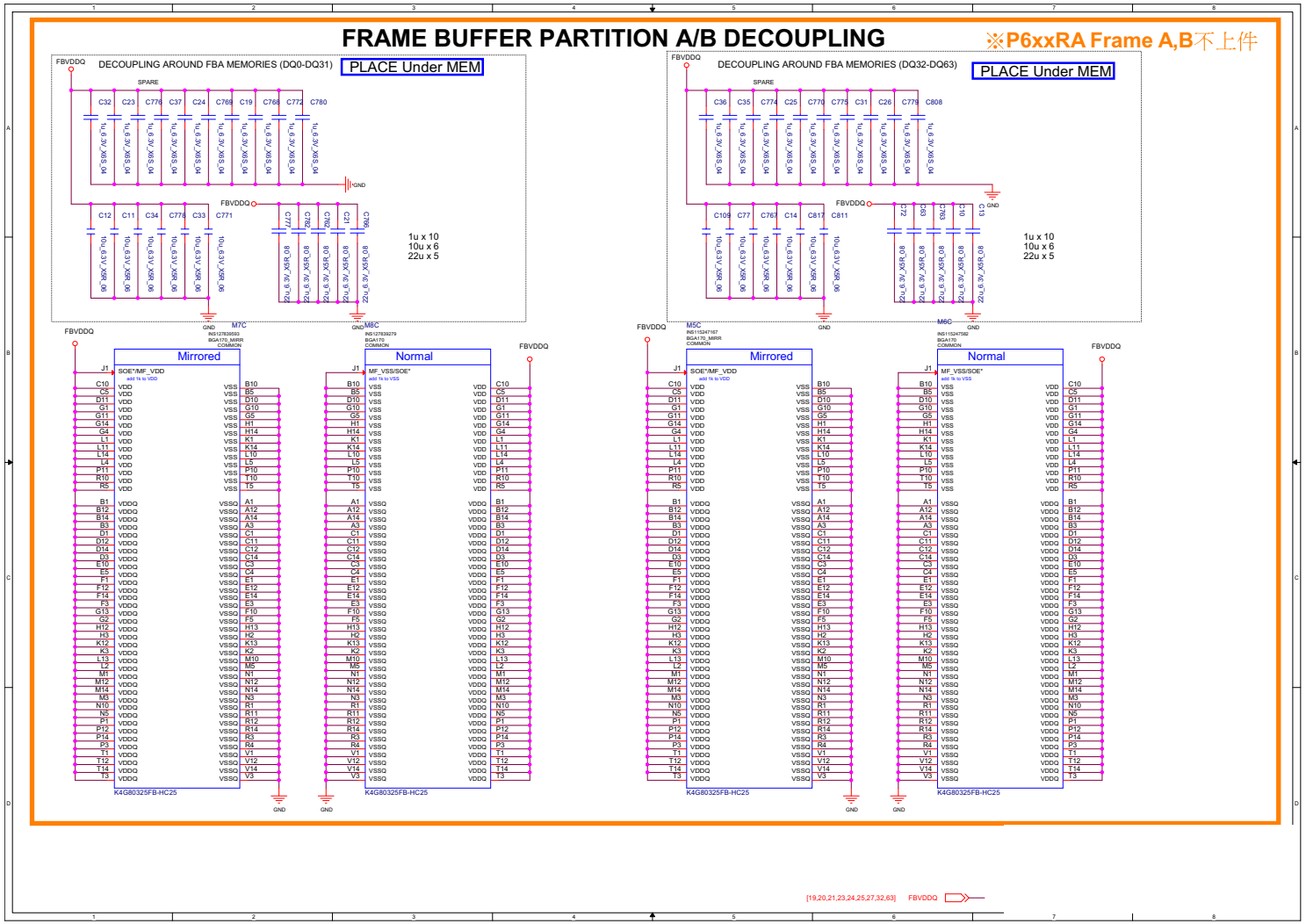


Sheet 22 of 81
Frame Buffer
Partition A_B

# GPU Frame Buffer Partition



**Sheet 23 of 81**
**GPU Frame Buffer Partition**

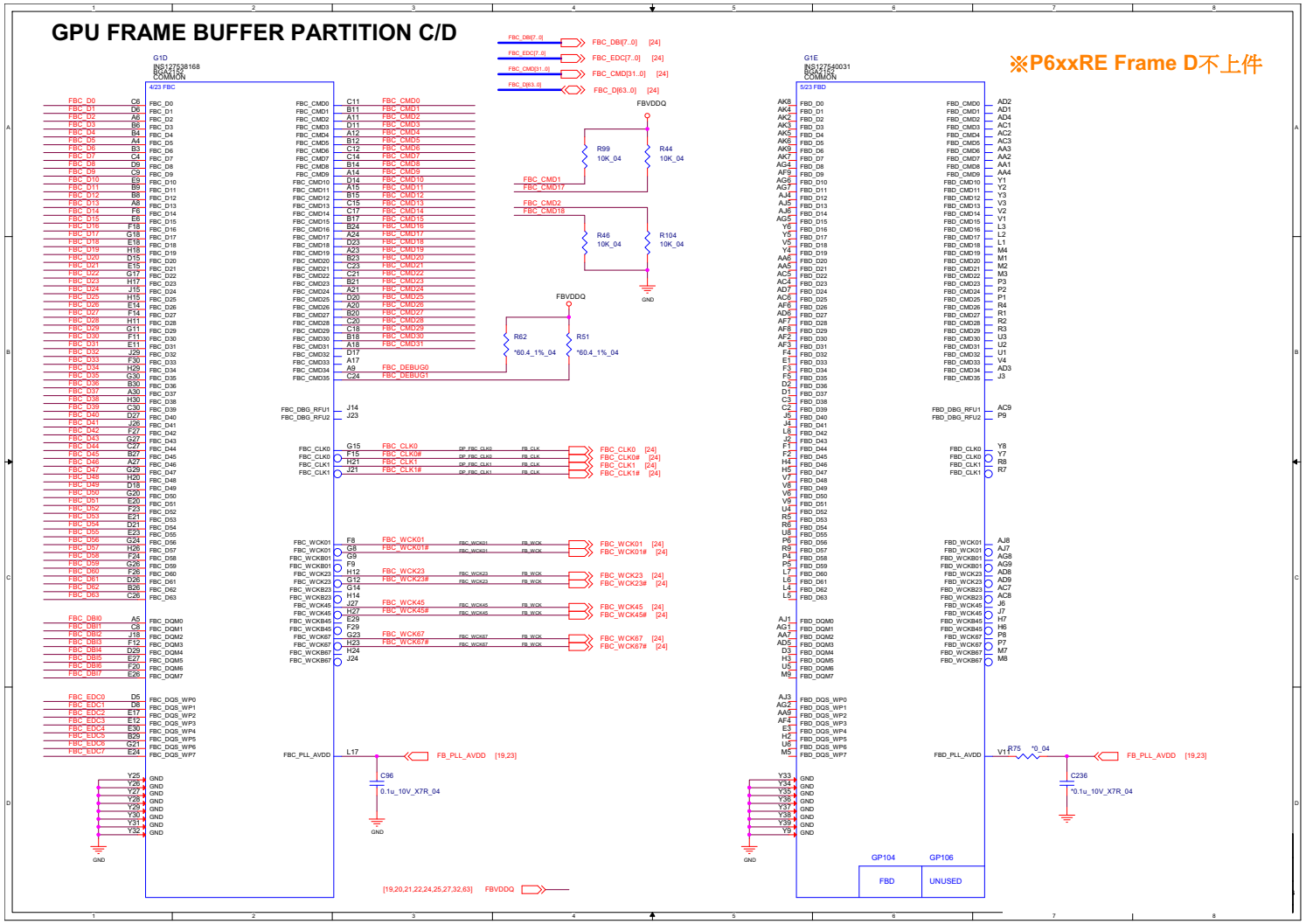

# Frame Buffer Partition C

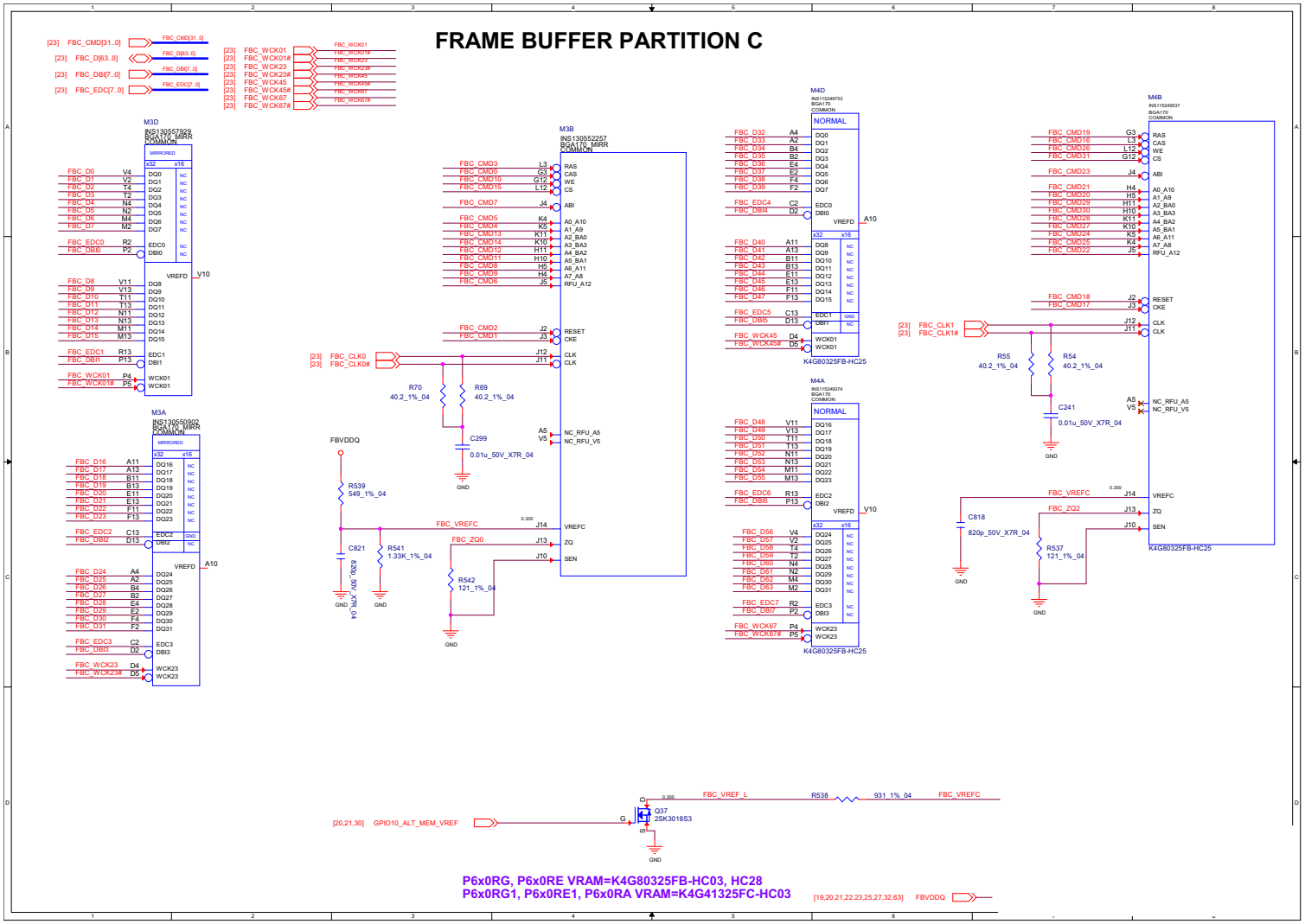


Sheet 24 of 81
Frame Buffer
Partition C

# Frame Buffer Partition C_D



**Sheet 25 of 81**
**Frame Buffer Partition C_D**

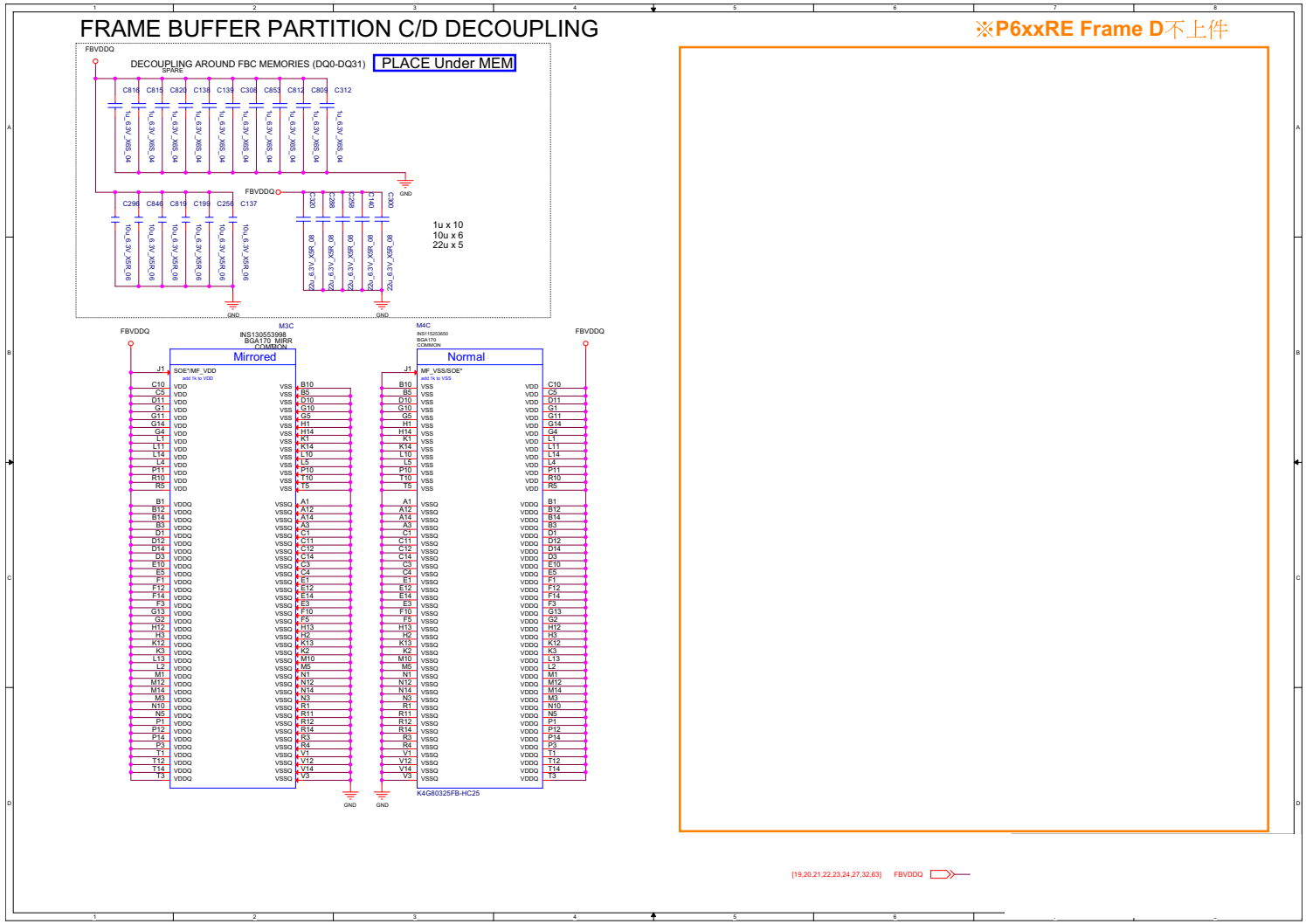

# GPU Decoupling

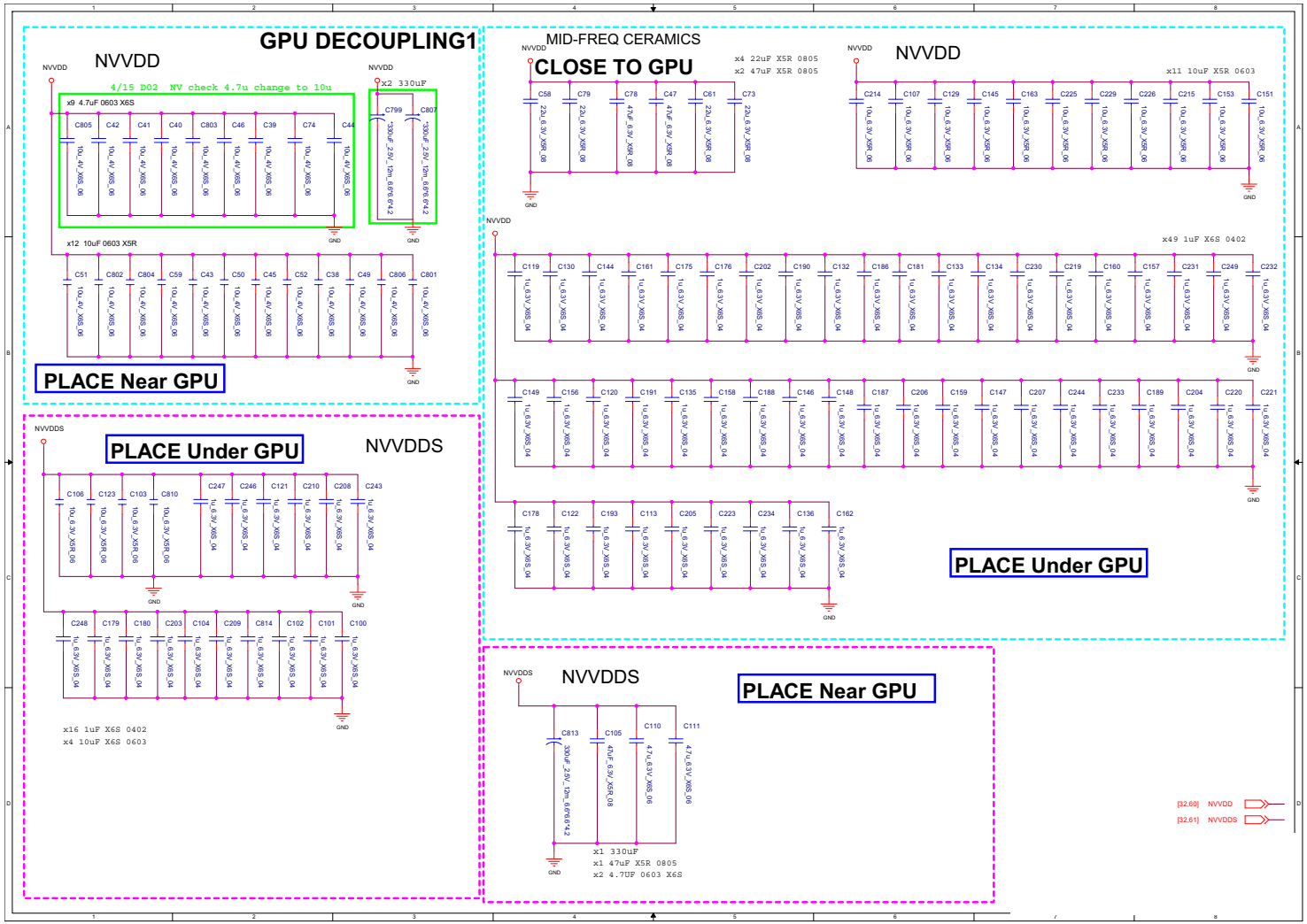


Sheet 26 of 81
GPU Decoupling

# GPU Decoupling 2



**Sheet 27 of 81**
**GPU Decoupling 2**

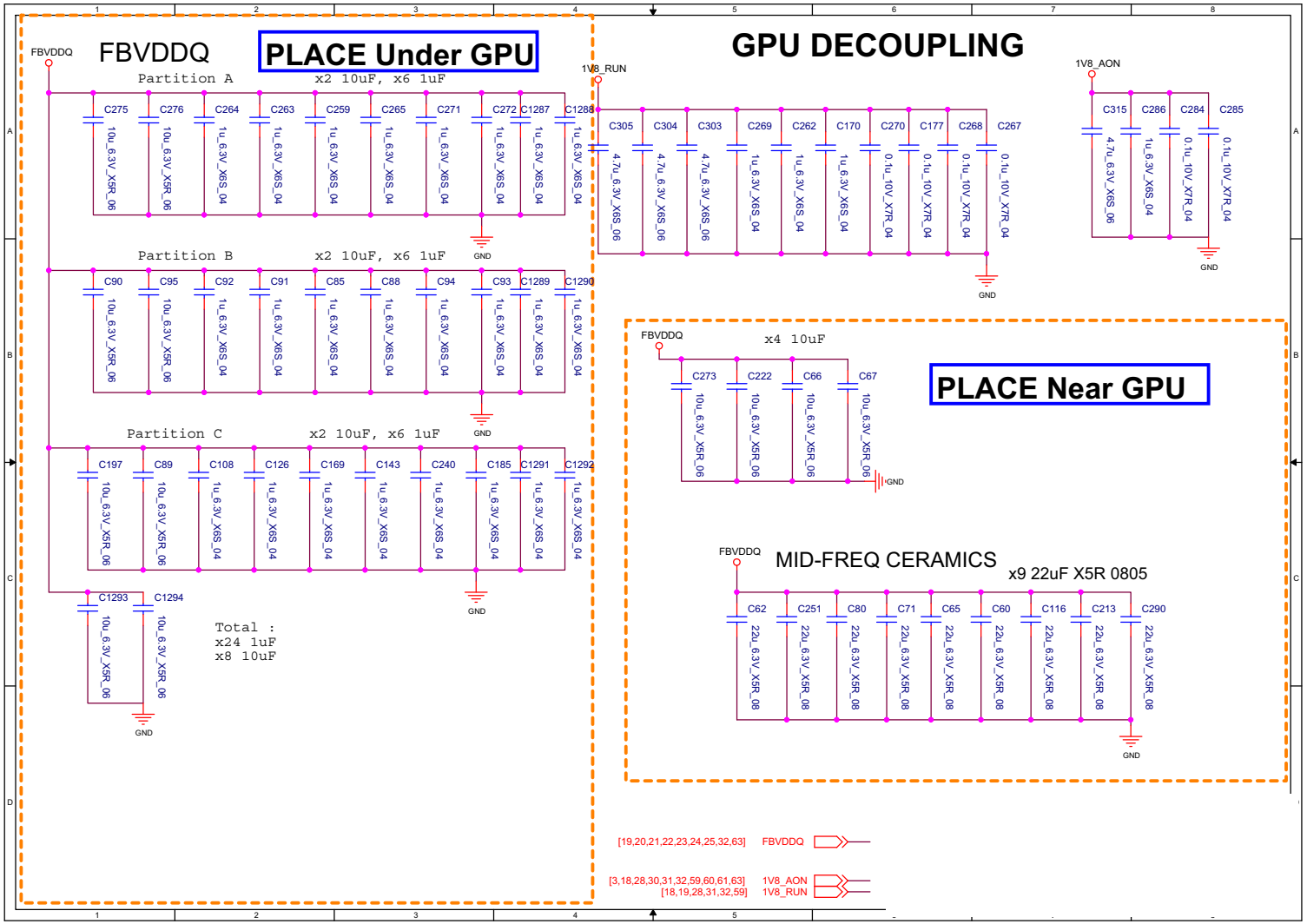

# Straps and XTAL

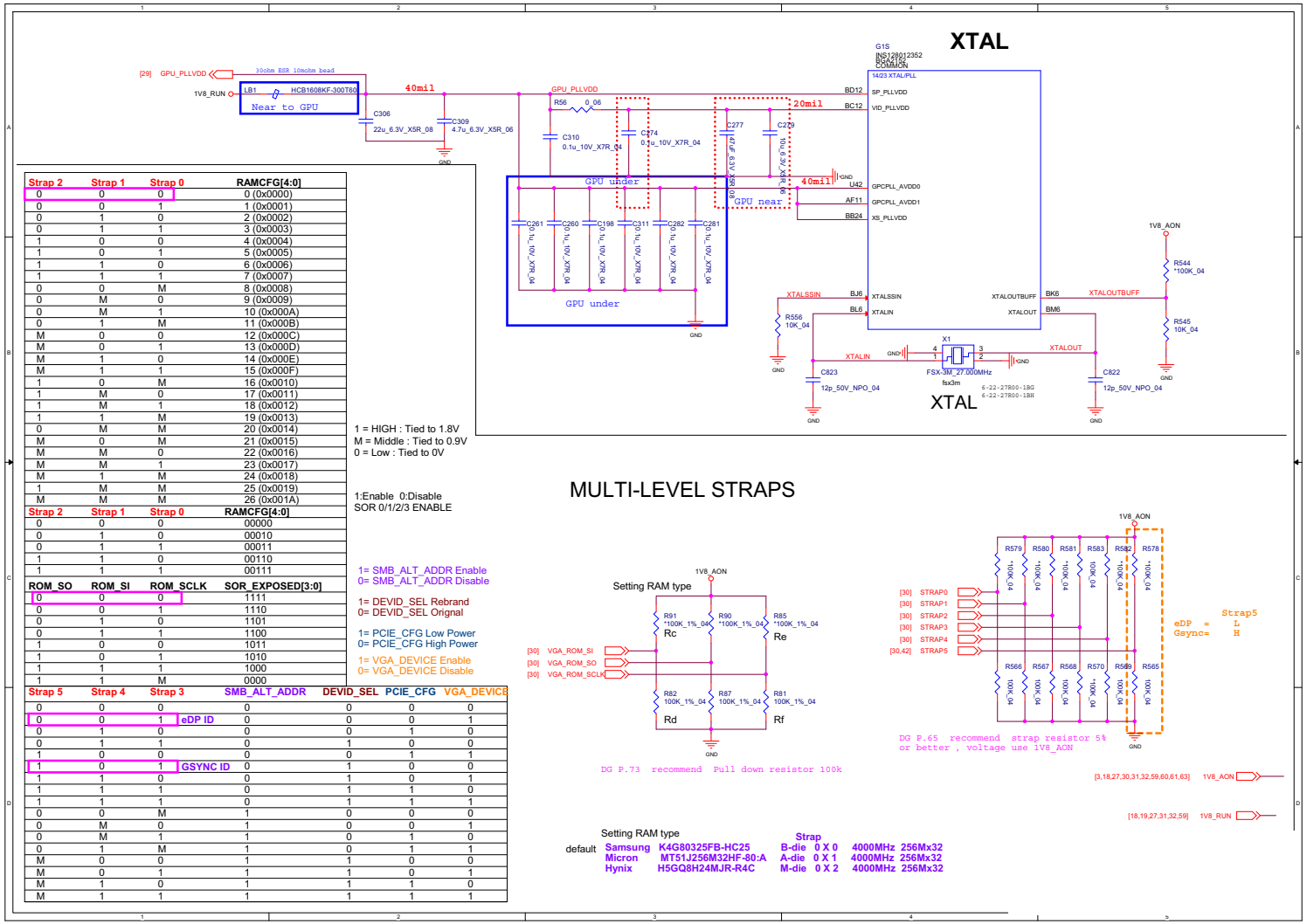


| Strap 2 | Strap 1 | Strap 0 | RAMCFG[4:0] |
|---|---|---|---|
| 0 | 0 | 0 | 0 (0x0000) |
| 0 | 0 | 1 | 1 (0x0001) |
| 0 | 1 | 0 | 2 (0x0002) |
| 0 | 1 | 1 | 3 (0x0003) |
| 1 | 0 | 0 | 4 (0x0004) |
| 1 | 0 | 1 | 5 (0x0005) |
| 1 | 1 | 0 | 6 (0x0006) |
| 1 | 1 | 1 | 7 (0x0007) |
| 0 | 0 | M | 8 (0x0008) |
| 0 | M | 0 | 9 (0x0009) |
| 0 | M | 1 | 10 (0x000A) |
| 0 | 1 | M | 11 (0x000B) |
| M | 0 | 0 | 12 (0x000C) |
| M | 0 | 1 | 13 (0x000D) |
| M | 1 | 0 | 14 (0x000E) |
| M | 1 | 1 | 15 (0x000F) |
| 1 | 0 | M | 16 (0x0010) |
| 1 | M | 0 | 17 (0x0011) |
| 1 | M | 1 | 18 (0x0012) |
| 1 | 1 | M | 19 (0x0013) |
| 0 | M | M | 20 (0x0014) |
| M | 0 | M | 21 (0x0015) |
| M | M | 0 | 22 (0x0016) |
| M | M | 1 | 23 (0x0017) |
| M | 1 | M | 24 (0x0018) |
| 1 | M | M | 25 (0x0019) |
| M | M | M | 26 (0x001A) |

1 = HIGH : Tied to 1.8V
M = Middle : Tied to 0.9V
0 = Low : Tied to 0V

| Strap 2 | Strap 1 | Strap 0 | RAMCFG[4:0] |
|---|---|---|---|
| 0 | 0 | 0 | 00000 |
| 0 | 1 | 0 | 00010 |
| 0 | 1 | 1 | 00011 |
| 1 | 1 | 0 | 00110 |
| 1 | 1 | 1 | 00111 |

1:Enable 0:Disable
SOR 0/1/2/3 ENABLE

| ROM_SO | ROM_SI | ROM_SCLK | SOR_EXPOSED[3:0] |
|---|---|---|---|
| 0 | 0 | 0 | 1111 |
| 0 | 0 | 1 | 1110 |
| 0 | 1 | 0 | 1101 |
| 0 | 1 | 1 | 1100 |
| 1 | 0 | 0 | 1011 |
| 1 | 0 | 1 | 1010 |
| 1 | 1 | 1 | 1000 |
| 1 | 1 | M | 0000 |

1= SMB_ALT_ADDR Enable
0= SMB_ALT_ADDR Disable

1= DEVID_SEL Rebrand
0= DEVID_SEL Orignal

1= PCIE_CFG Low Power
0= PCIE_CFG High Power

1= VGA_DEVICE Enable
0= VGA_DEVICE Disable

| Strap 5 | Strap 4 | Strap 3 | | SMB_ALT_ADDR | DEVID_SEL | PCIE_CFG | VGA_DEVICE |
|---|---|---|---|---|---|---|---|
| 0 | 0 | 0 | | 0 | 0 | 0 | 0 |
| 0 | 0 | 1 | eDP ID | 0 | 0 | 0 | 1 |
| 0 | 1 | 0 | | 0 | 0 | 1 | 0 |
| 0 | 1 | 1 | | 0 | 1 | 0 | 0 |
| 1 | 0 | 0 | | 0 | 0 | 1 | 1 |
| 1 | 0 | 1 | GSYNC ID | 0 | 1 | 0 | 0 |
| 1 | 1 | 0 | | 0 | 1 | 0 | 1 |
| 1 | 1 | 1 | | 0 | 1 | 1 | 0 |
| 1 | 1 | 1 | | 0 | 1 | 1 | 1 |
| 0 | 0 | M | | 1 | 0 | 0 | 0 |
| 0 | M | 0 | | 1 | 0 | 0 | 1 |
| 0 | M | 1 | | 1 | 0 | 1 | 0 |
| 0 | 1 | M | | 1 | 0 | 1 | 1 |
| M | 0 | 0 | | 1 | 1 | 0 | 0 |
| M | 0 | 1 | | 1 | 1 | 0 | 1 |
| M | 1 | 0 | | 1 | 1 | 1 | 0 |
| M | 1 | 1 | | 1 | 1 | 1 | 1 |




Setting RAM type

| | | | Strap | | |
|---|---|---|---|---|---|
| default | Samsung | K4G80325FB-HC25 | B-die 0 X 0 | 4000MHz | 256Mx32 |
| | Micron | MT51J256M32HF-80:A | A-die 0 X 1 | 4000MHz | 256Mx32 |
| | Hynix | H5GQ8H24MJR-R4C | M-die 0 X 2 | 4000MHz | 256Mx32 |

Sheet 28 of 81
Straps and XTAL

# IFP I/O Interface



**Sheet 29 of 81**
**IFP I/O Interface**

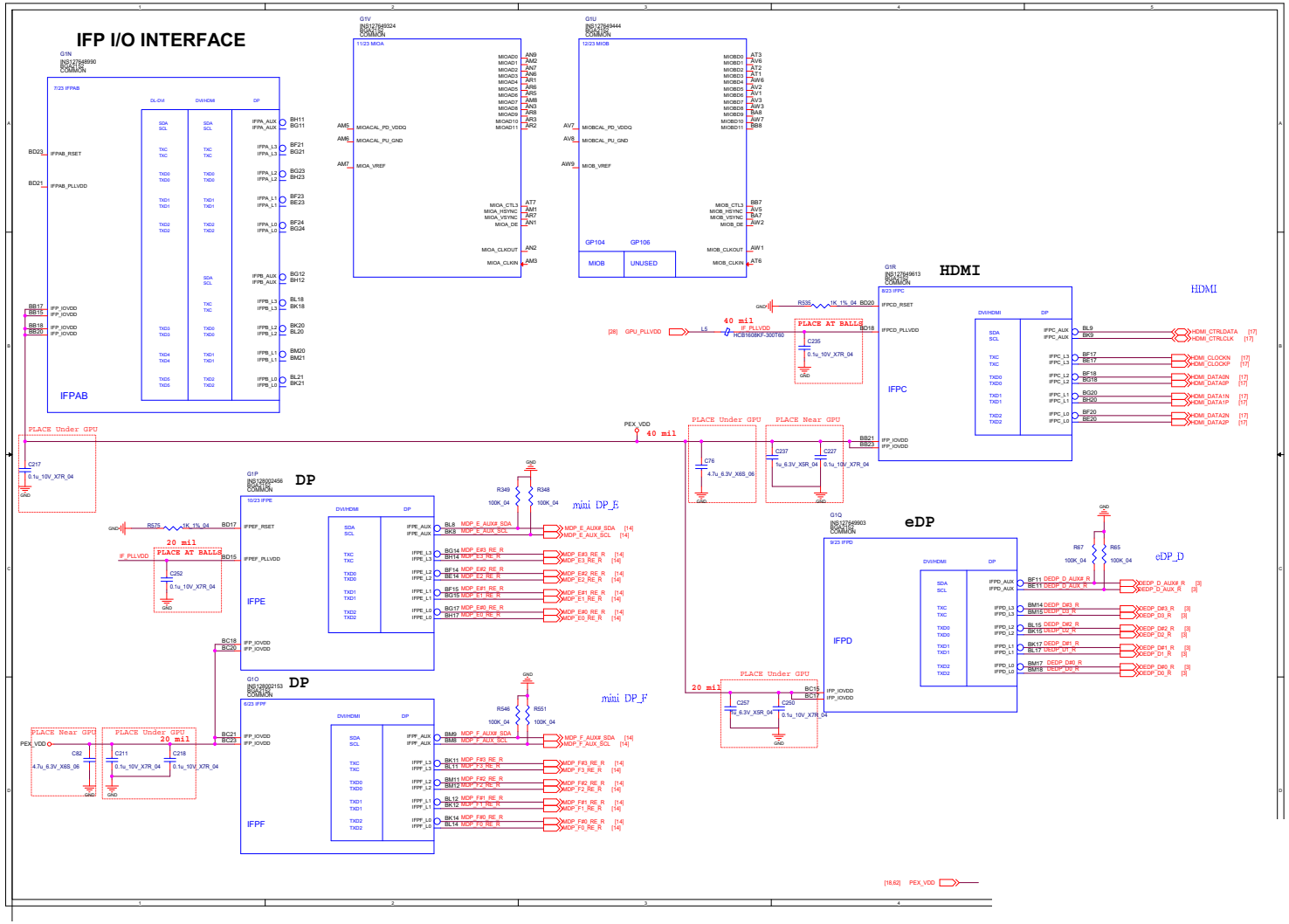

# Misc - GPIO, I2C and ROM

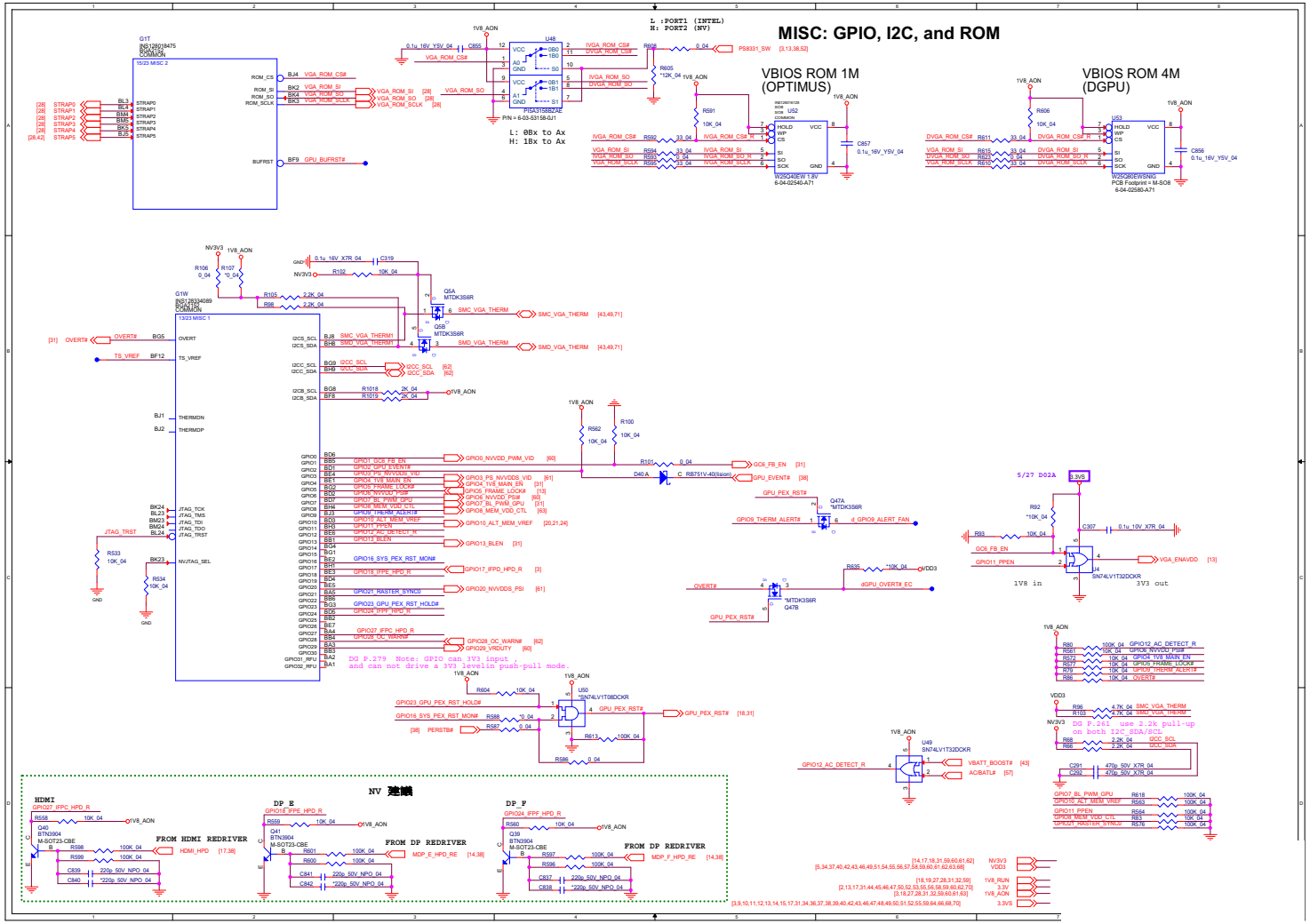


Sheet 30 of 81
Misc - GPIO, I2C and ROM

# NVIDIA Power Sequence



**Sheet 31 of 81**
**NVIDIA Power Sequence**

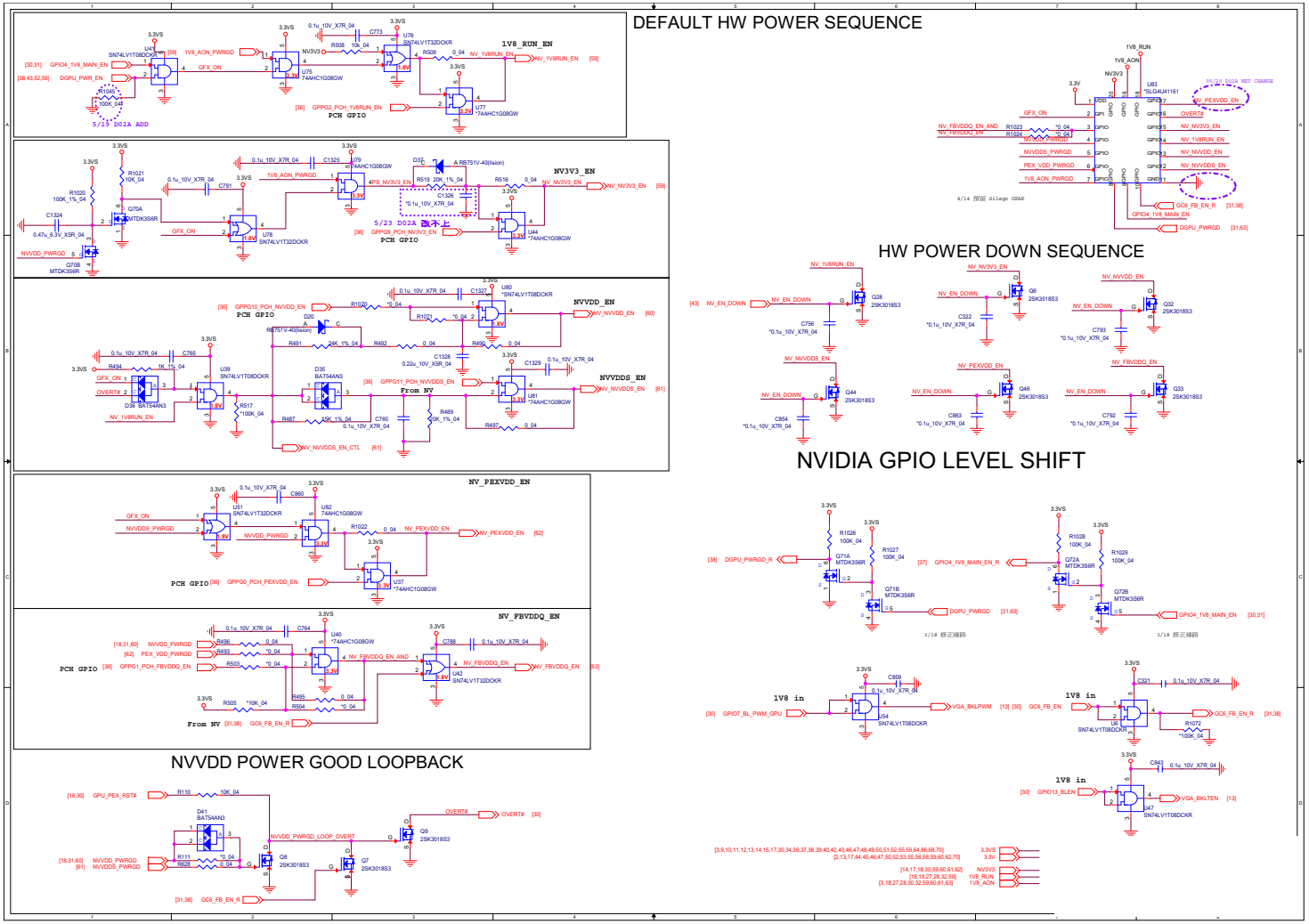

# GPU NVVDD, FBVDDQ

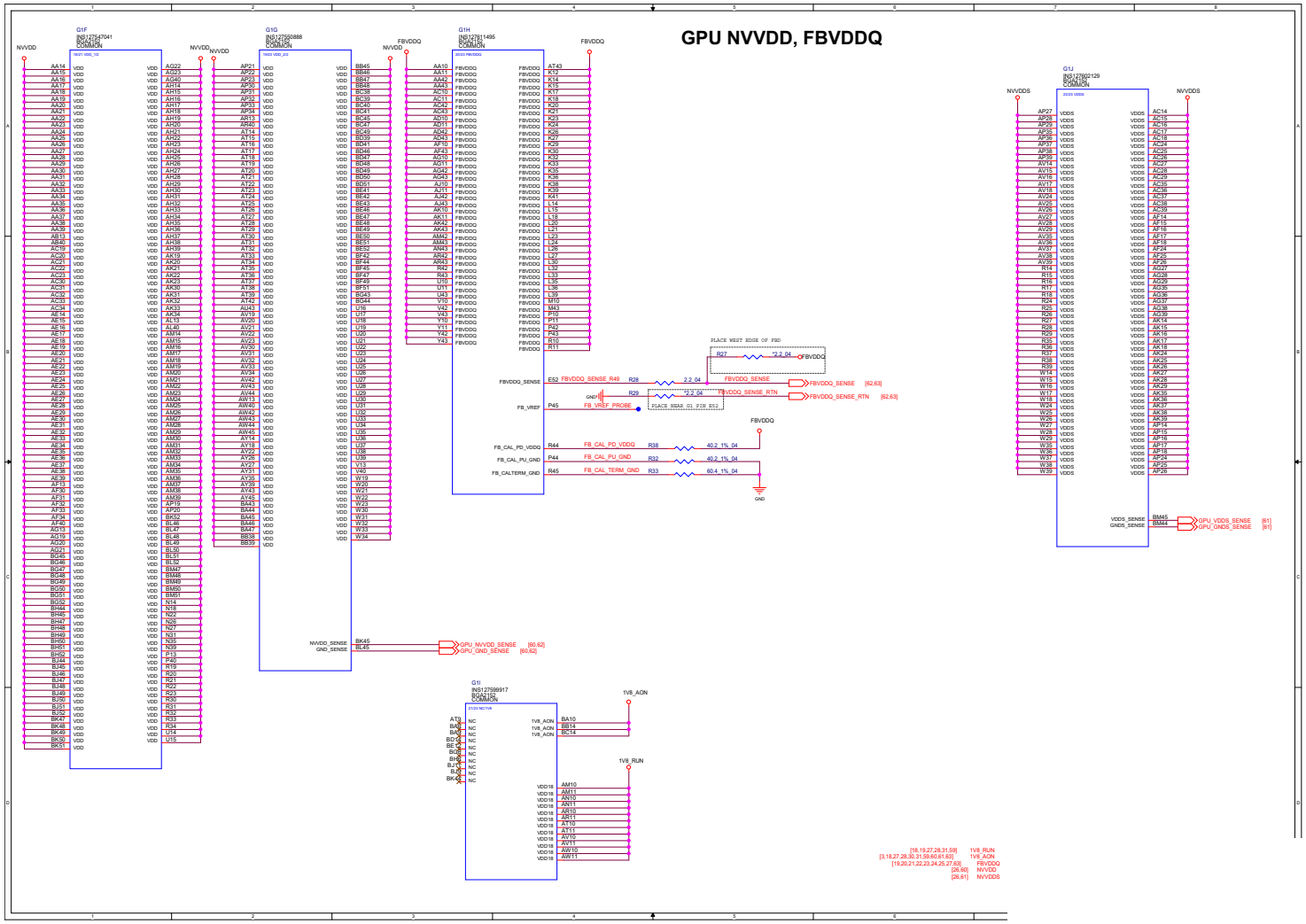


Sheet 32 of 81
GPU NVVDD, FBVDDQ

B.Schematic Diagrams

# GPU GND



**Sheet 33 of 81**
**GPU GND**

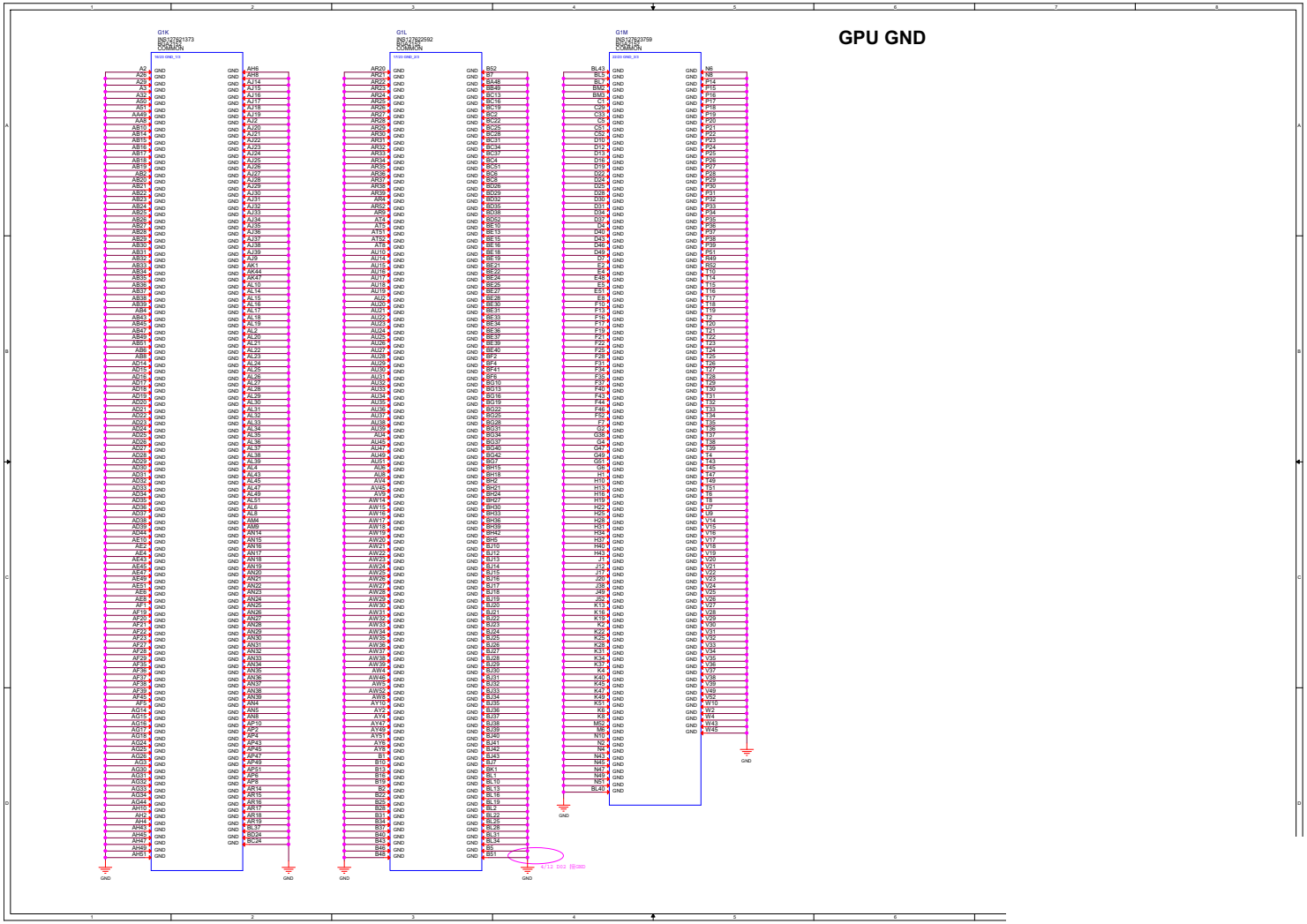

# PCH 1/9

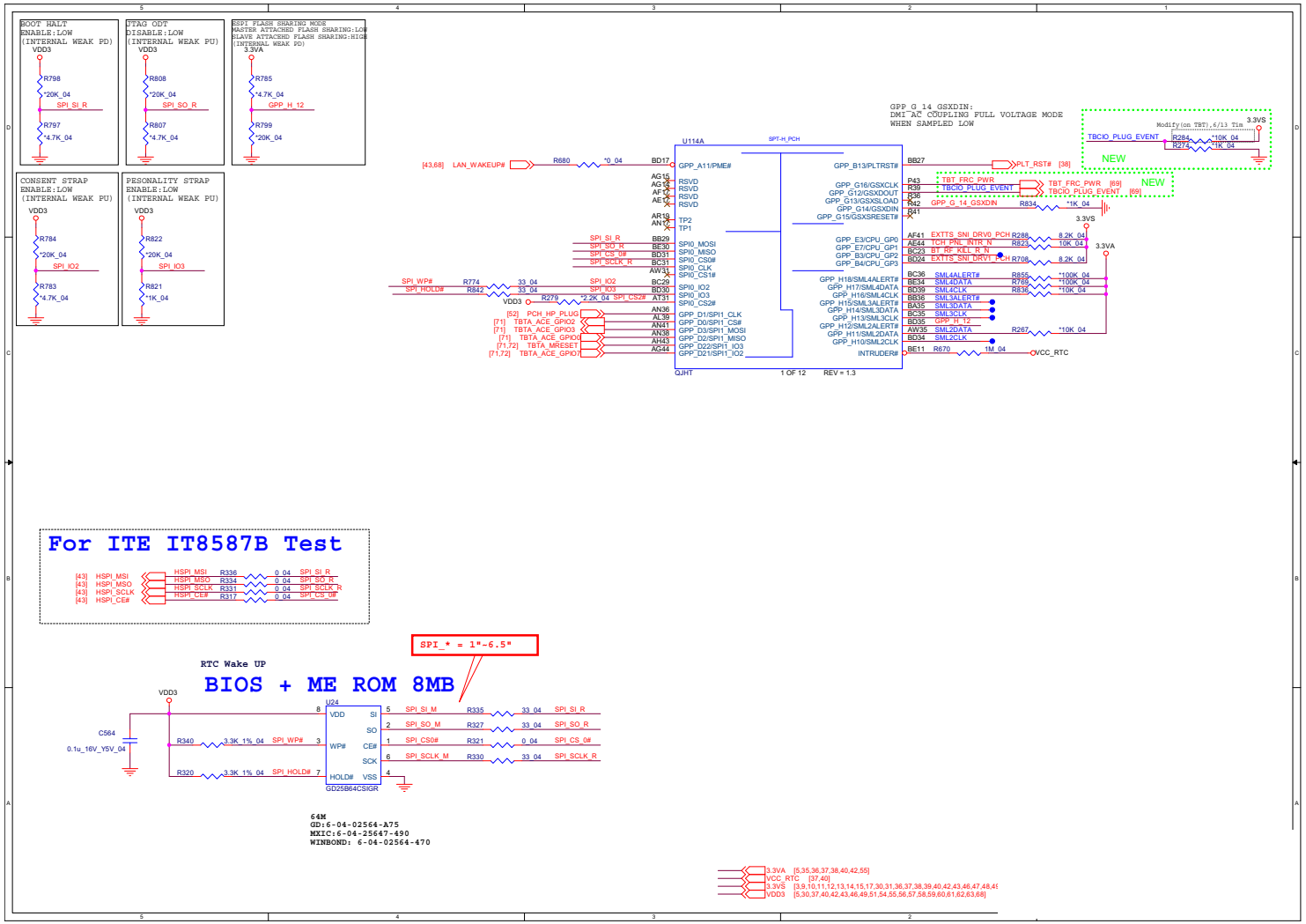


Sheet 34 of 81
PCH 1/9

# PCH 2/9



**Sheet 35 of 81**
**PCH 2/9**

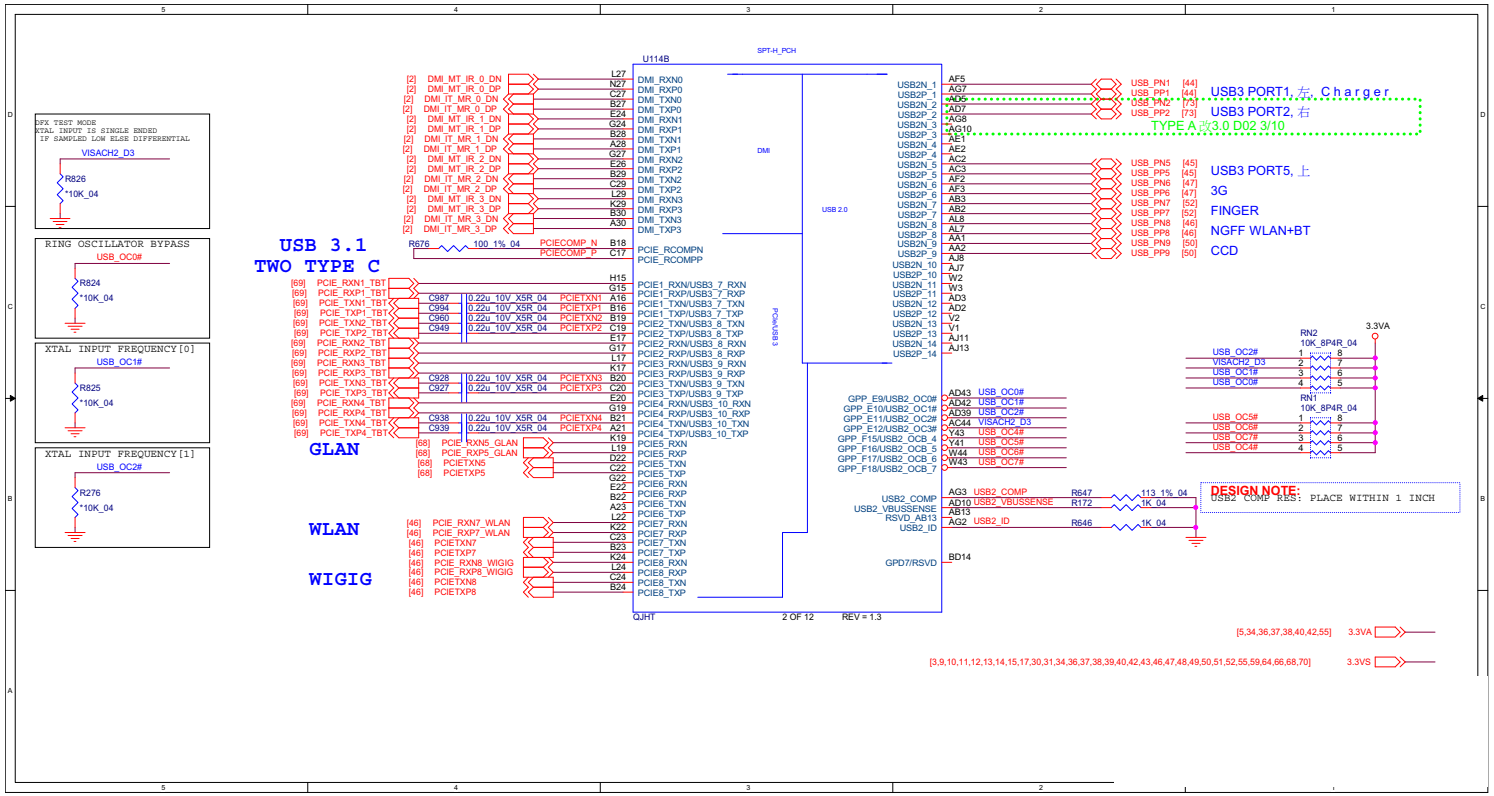

# PCH 3/9

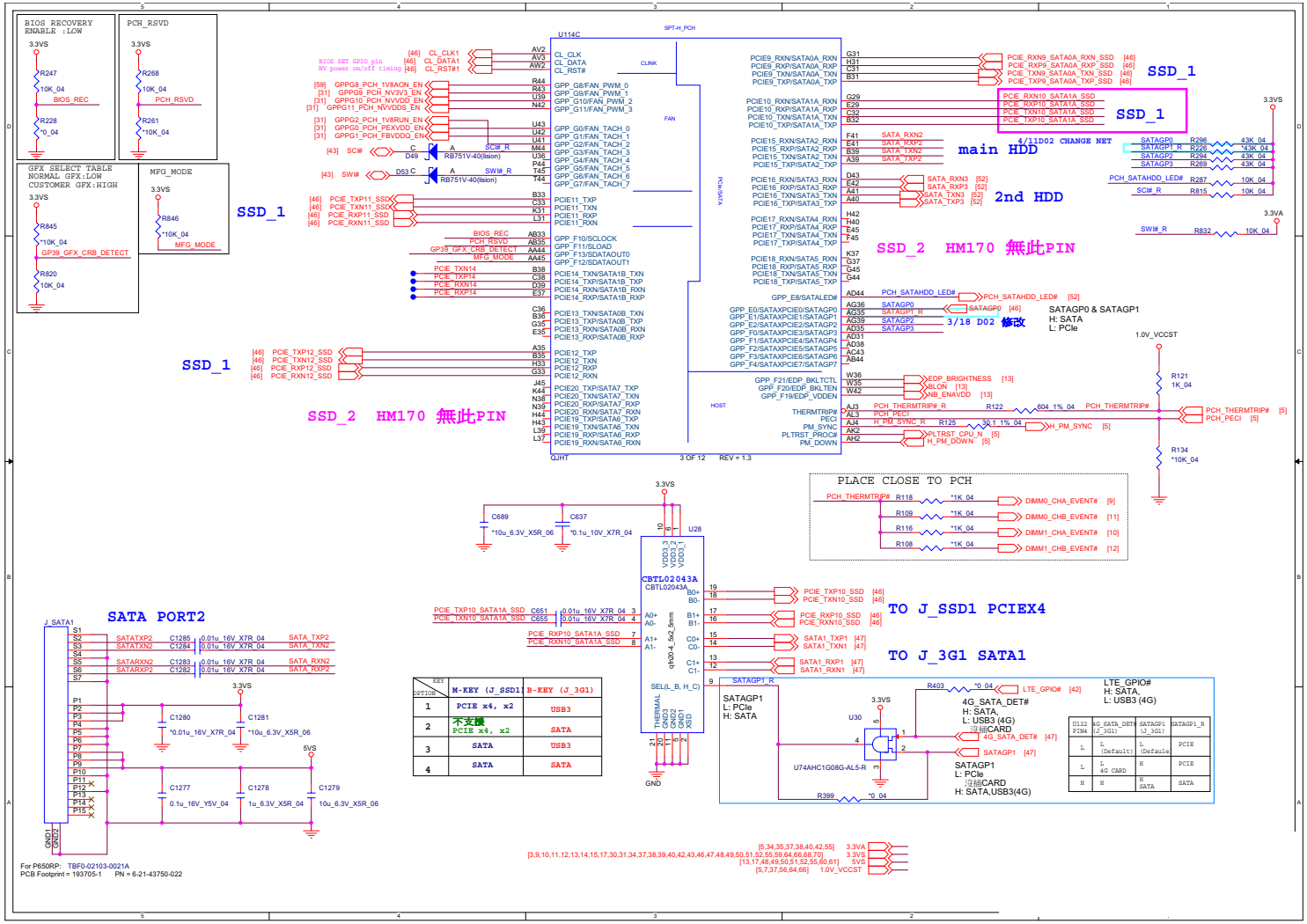


Sheet 36 of 81
PCH 3/9

# PCH 4/9



**Sheet 37 of 81**
**PCH 4/9**

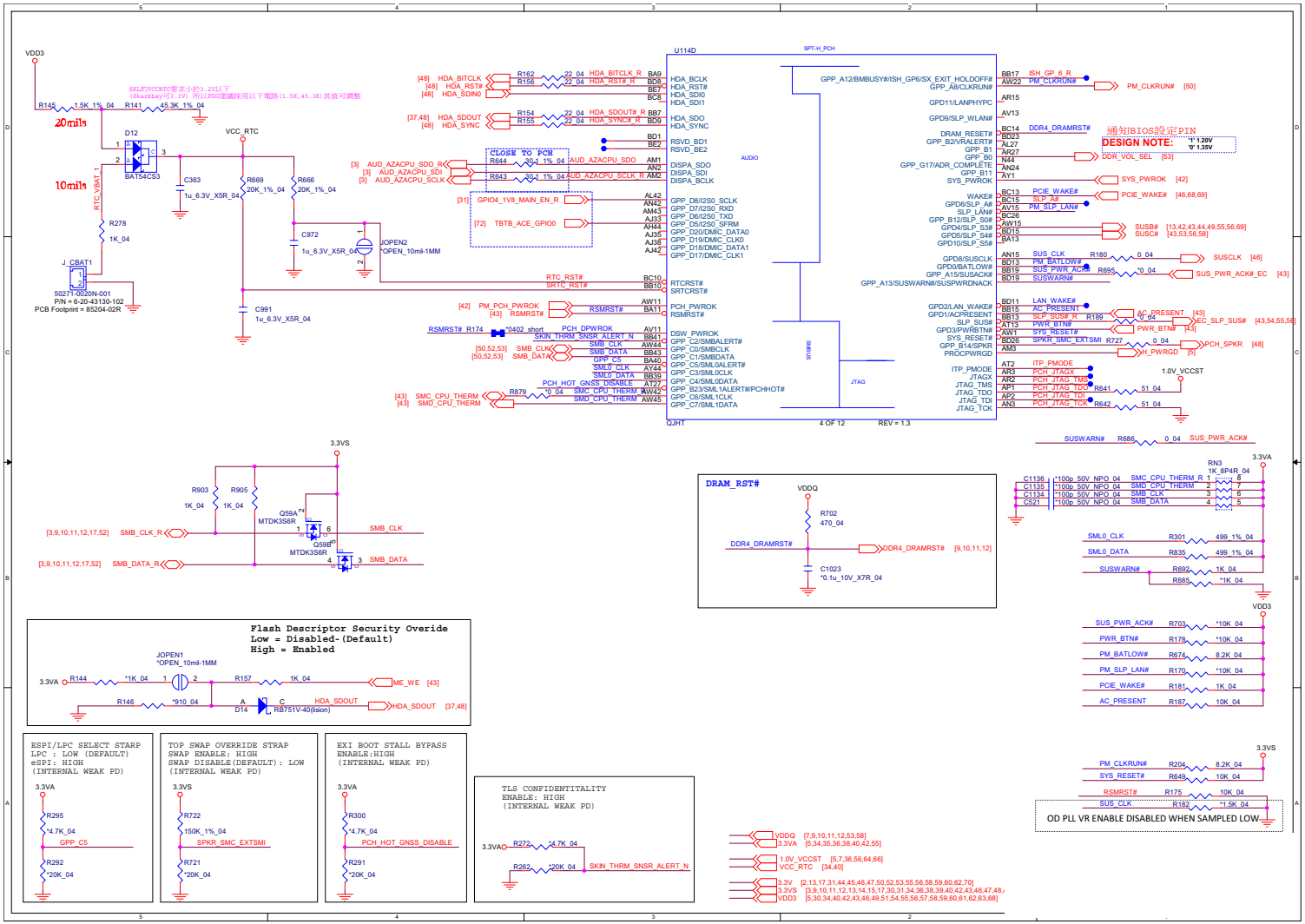

# PCH 5/9

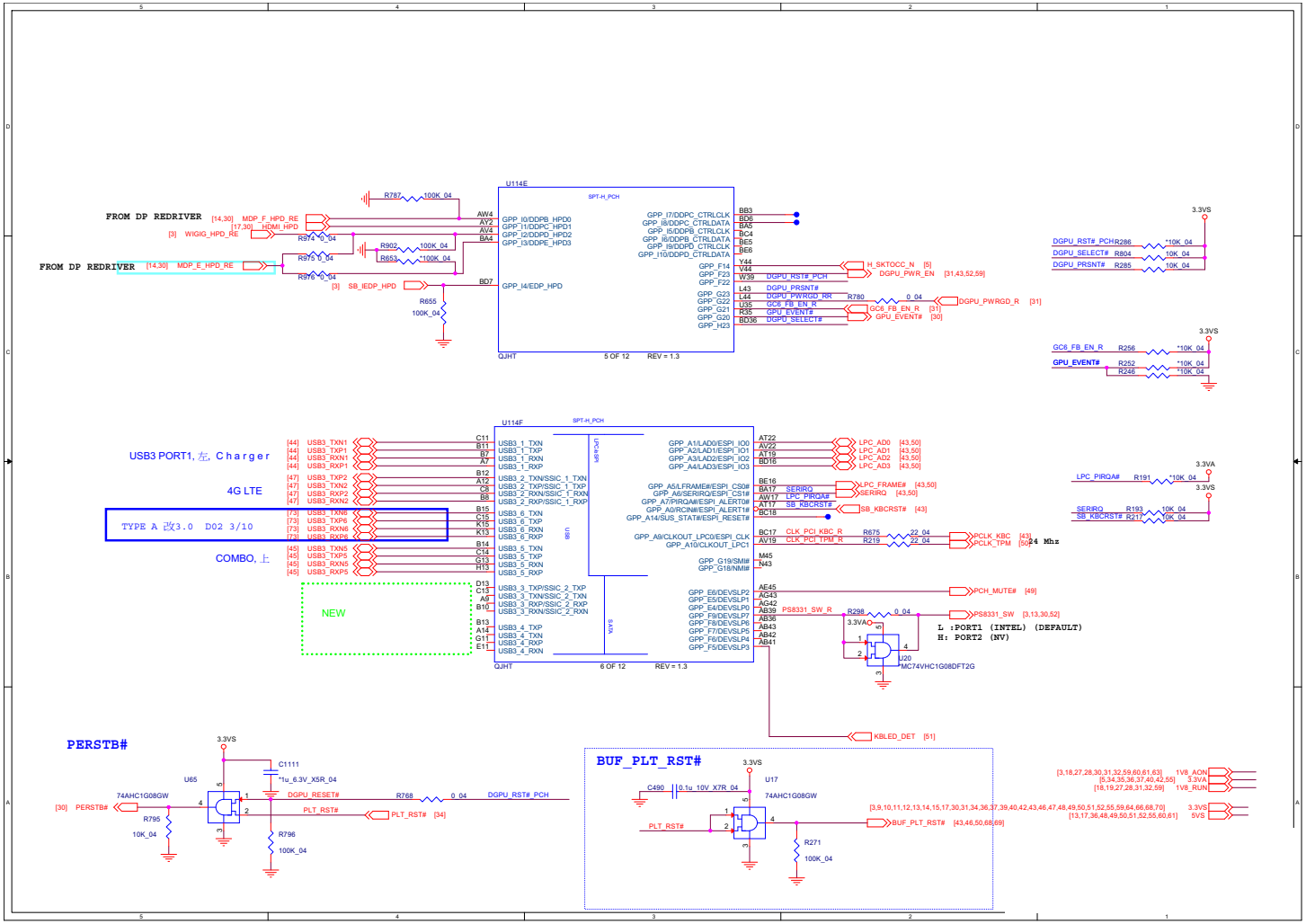


Sheet 38 of 81
PCH 5/9

# PCH 6/9



**Sheet 39 of 81**
**PCH 6/9**

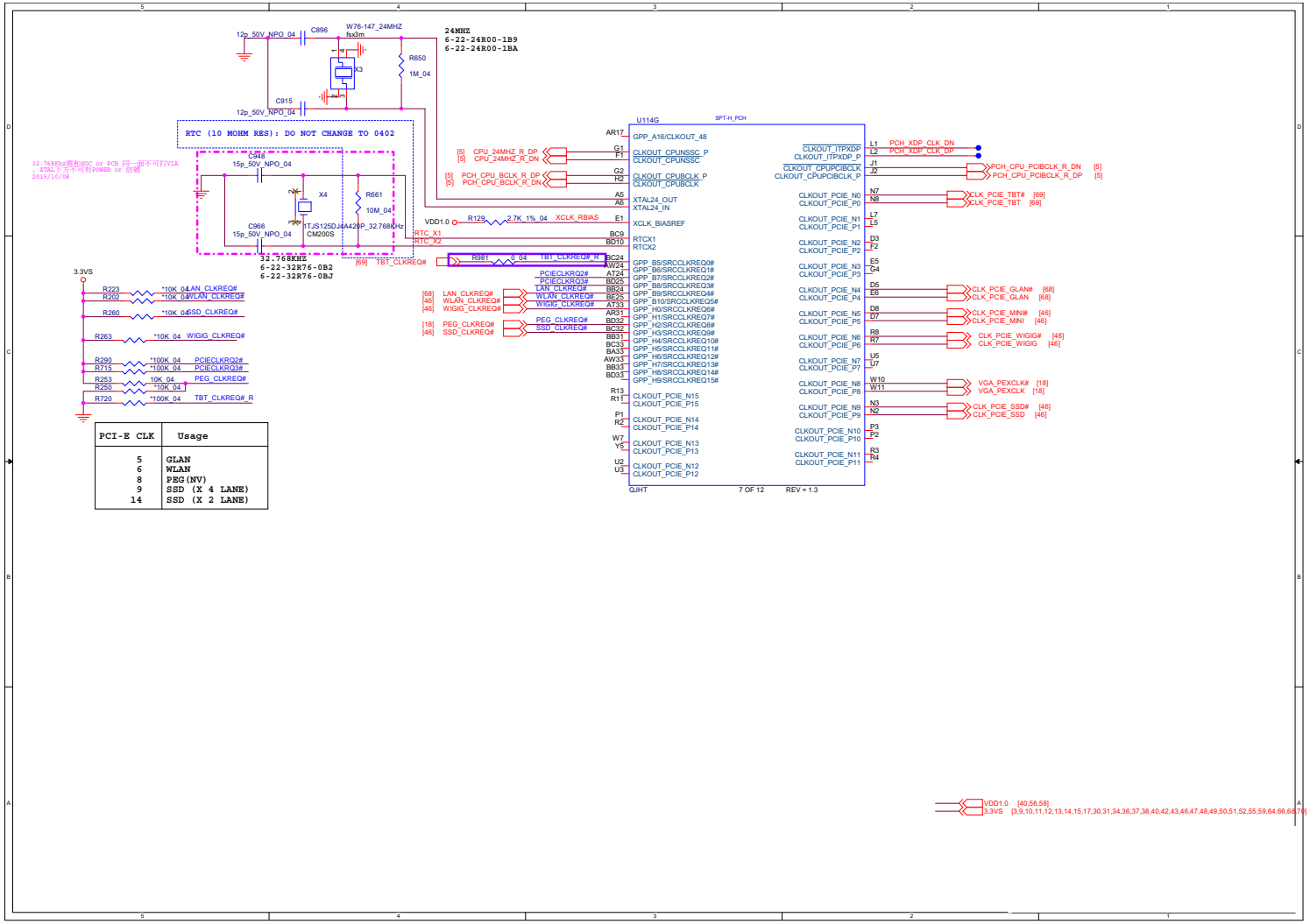

# PCH 7/9

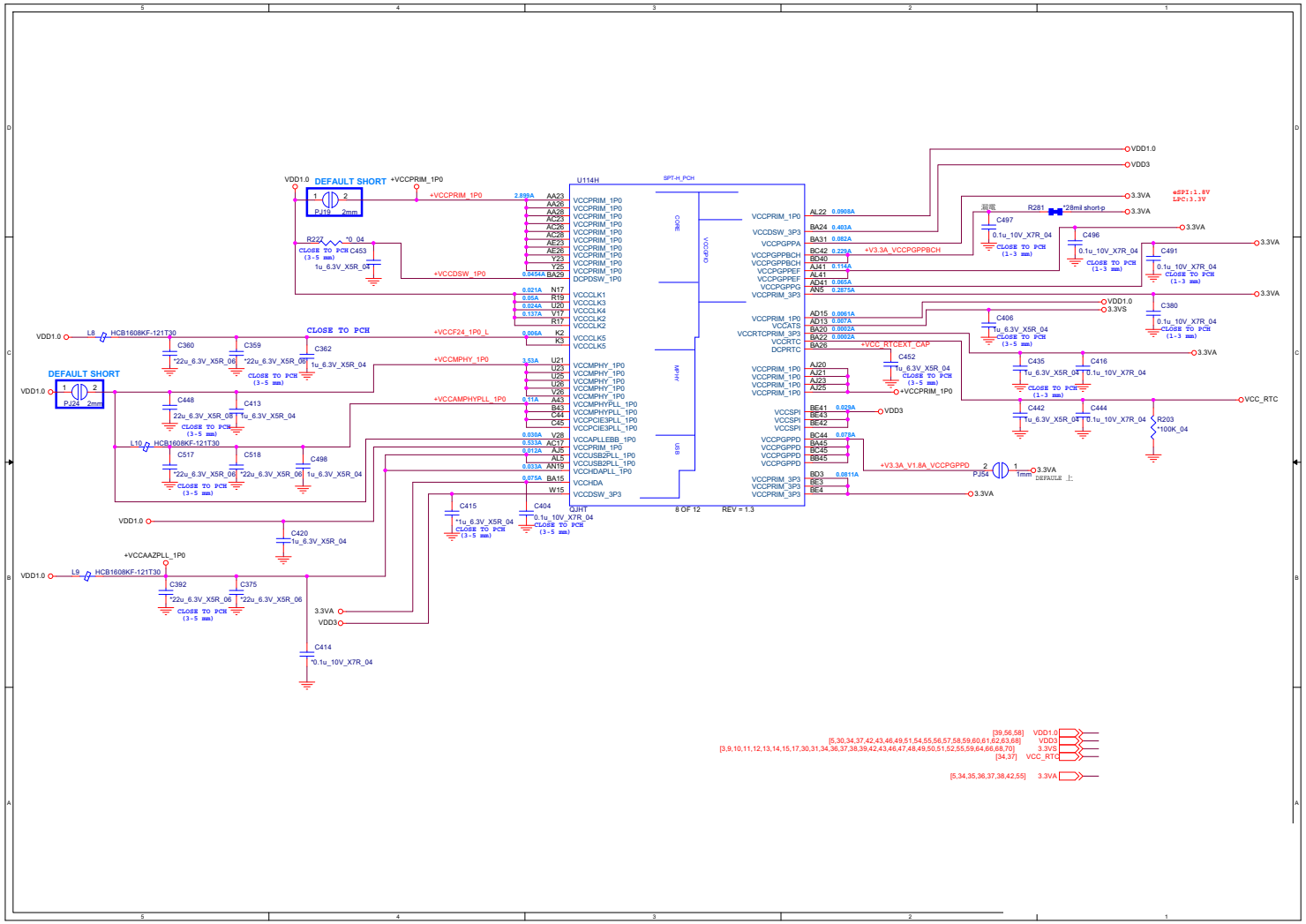


Sheet 40 of 81
PCH 7/9

# PCH 8/9



**Sheet 41 of 81**
**PCH 8/9**

# PCH 9/9

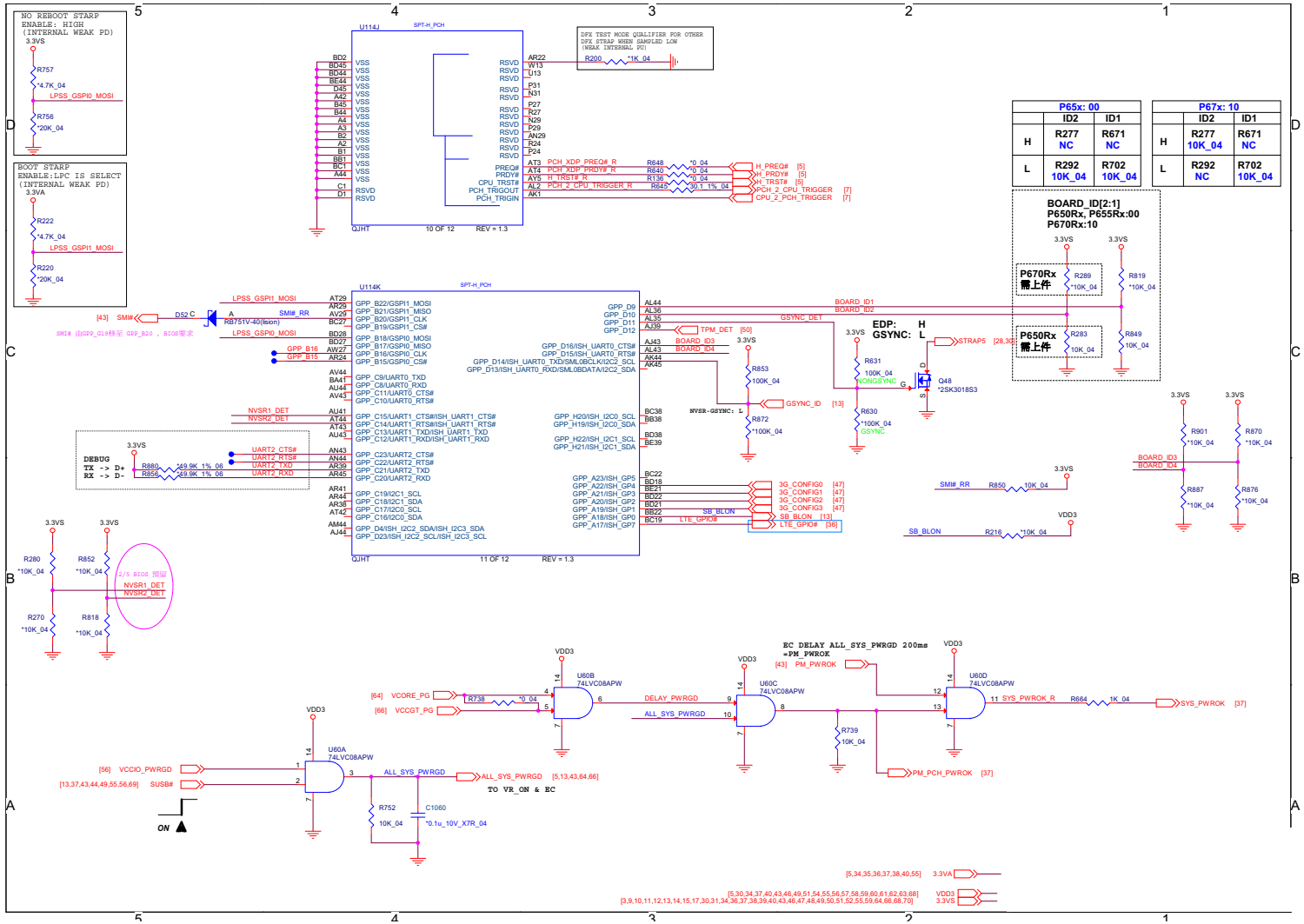


Sheet 42 of 81
PCH 9/9

B.Schematic Diagrams

# KBC IT8587



**Sheet 43 of 81**
**KBC IT8587**

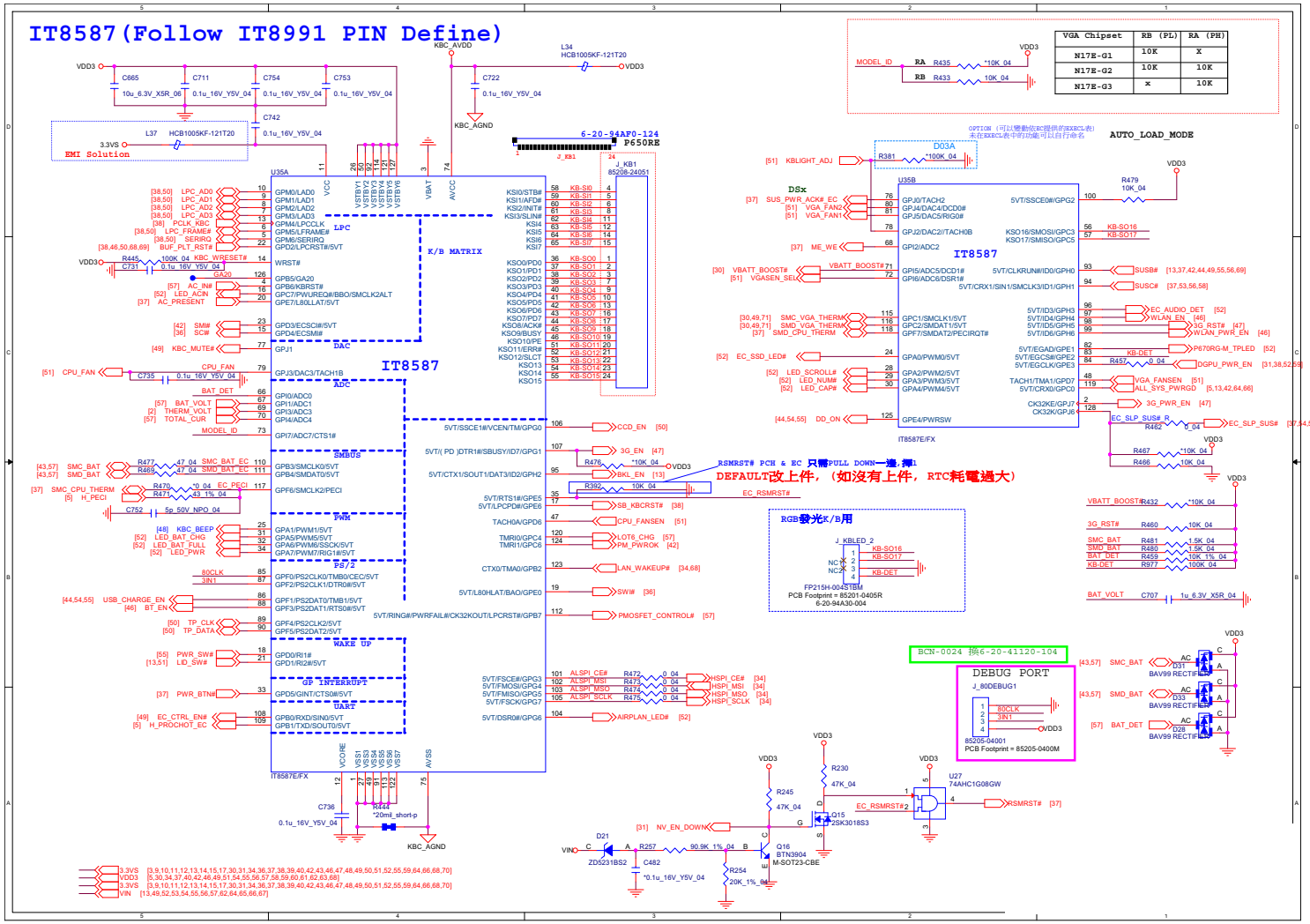

# USB Charger

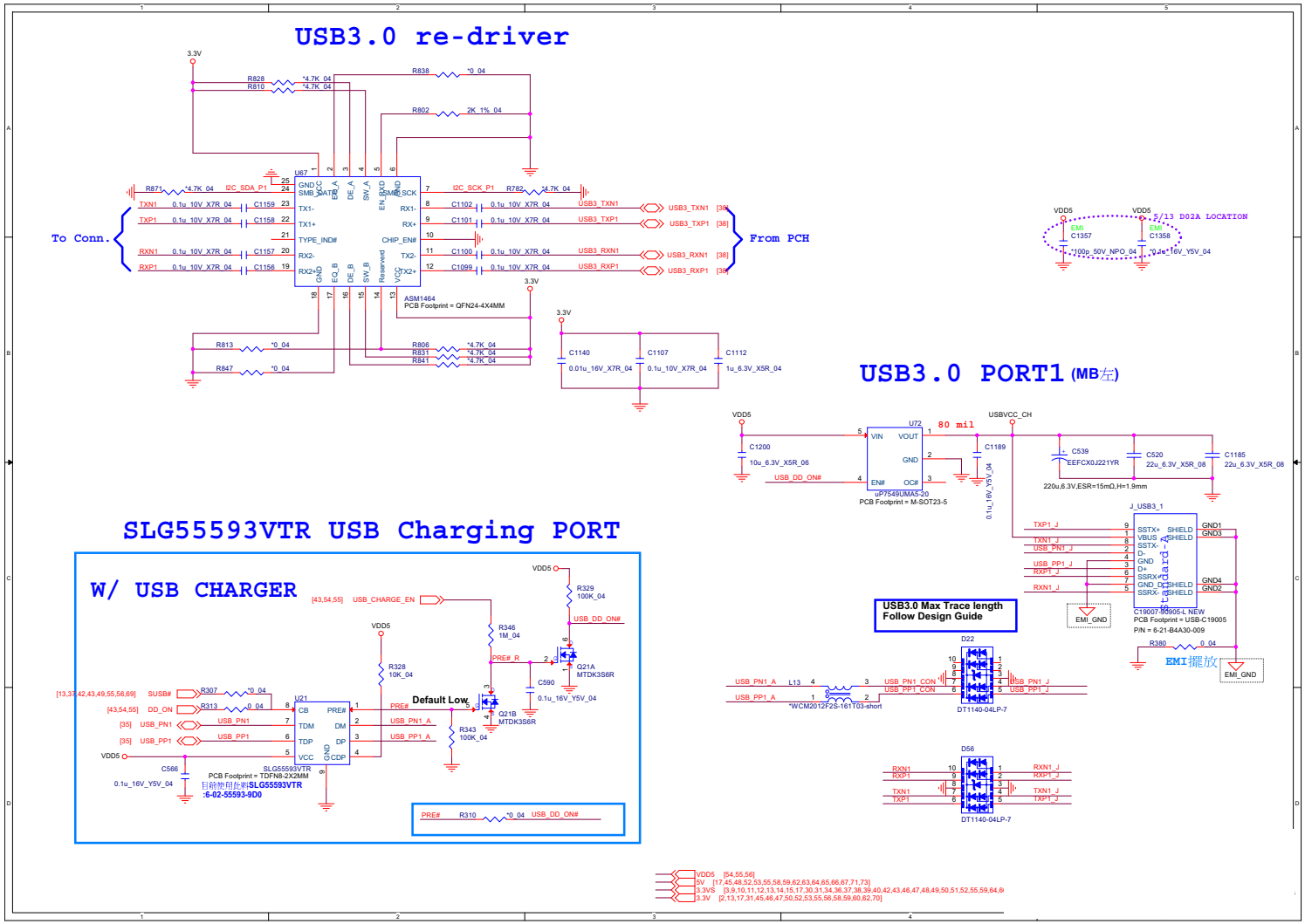


Sheet 44 of 81
USB Charger

# USB

Sheet 45 of 81
USB

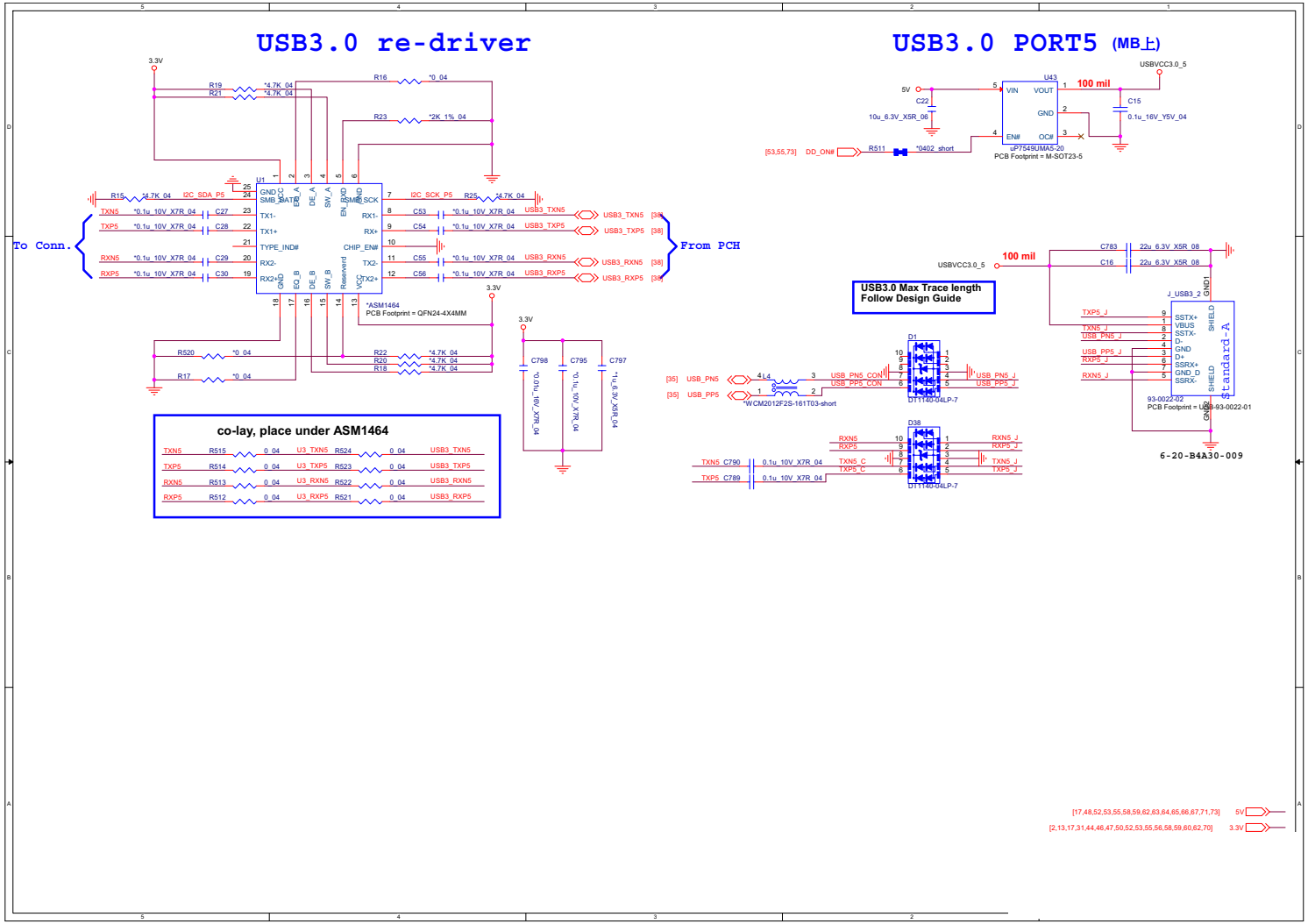

# M.2 WLAN+BT, PCIE4X SSD

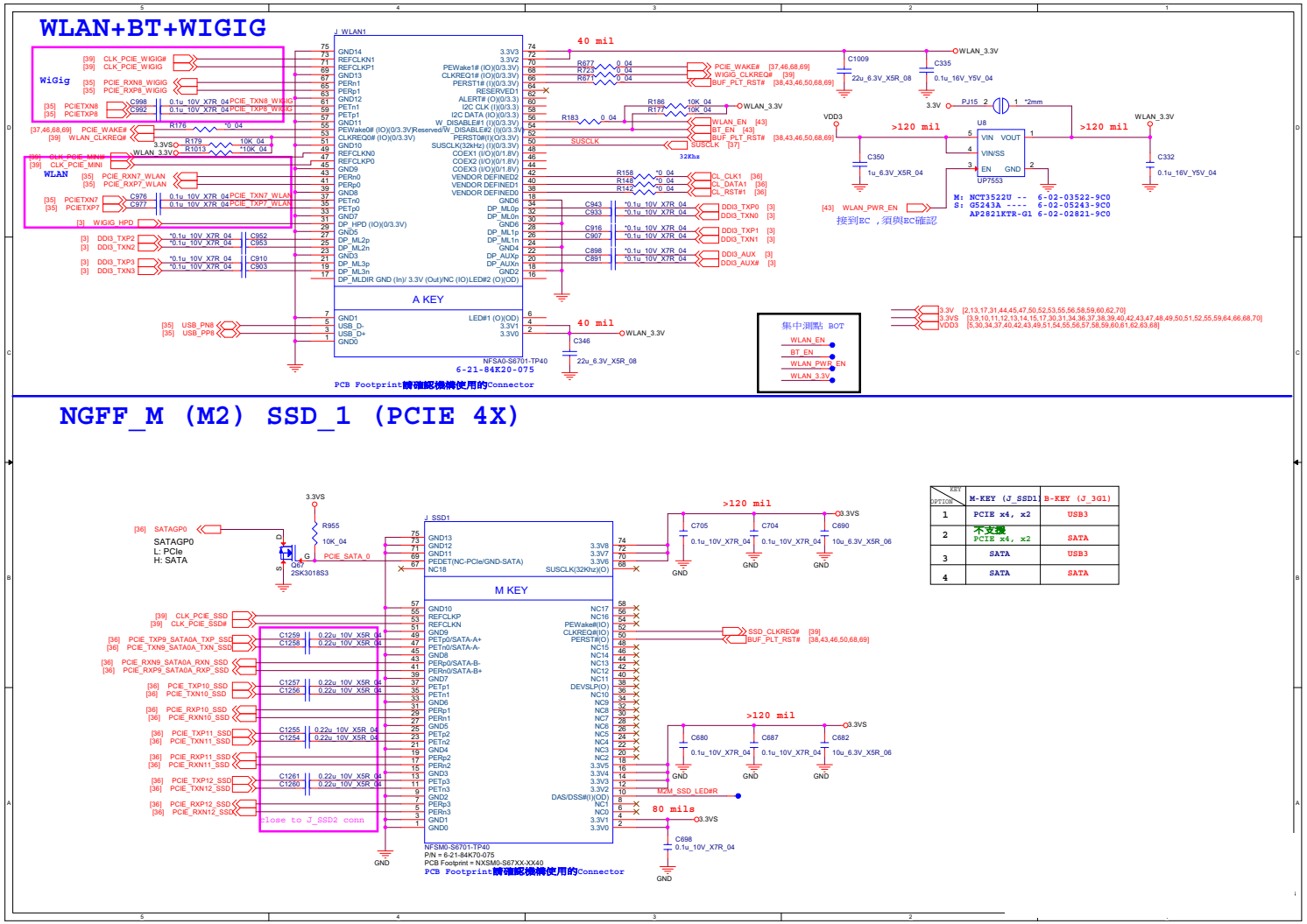


| KEY / OPTION | M-KEY (J_SSD1) | B-KEY (J_3G1) |
|---|---|---|
| 1 | PCIE x4, x2 | USB3 |
| 2 | 不支援 PCIE x4, x2 | SATA |
| 3 | SATA | USB3 |
| 4 | SATA | SATA |

Sheet 46 of 81
M.2 WLAN+BT,
PCIE4X SSD

B.Schematic Diagrams

# M.2 3G/LTE



**Sheet 47 of 81**
**M.2 3G/LTE**

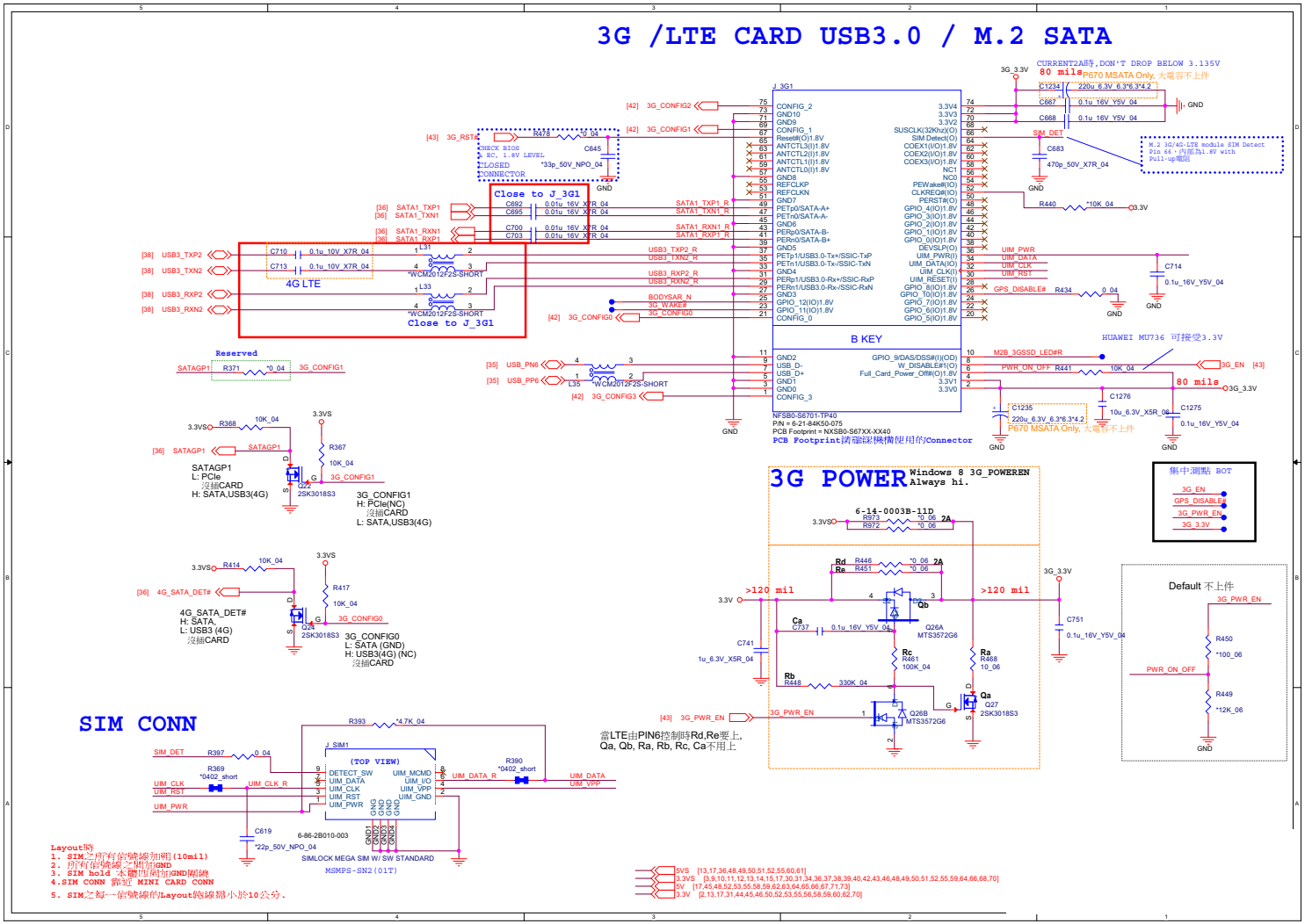

# Realtek ALC892

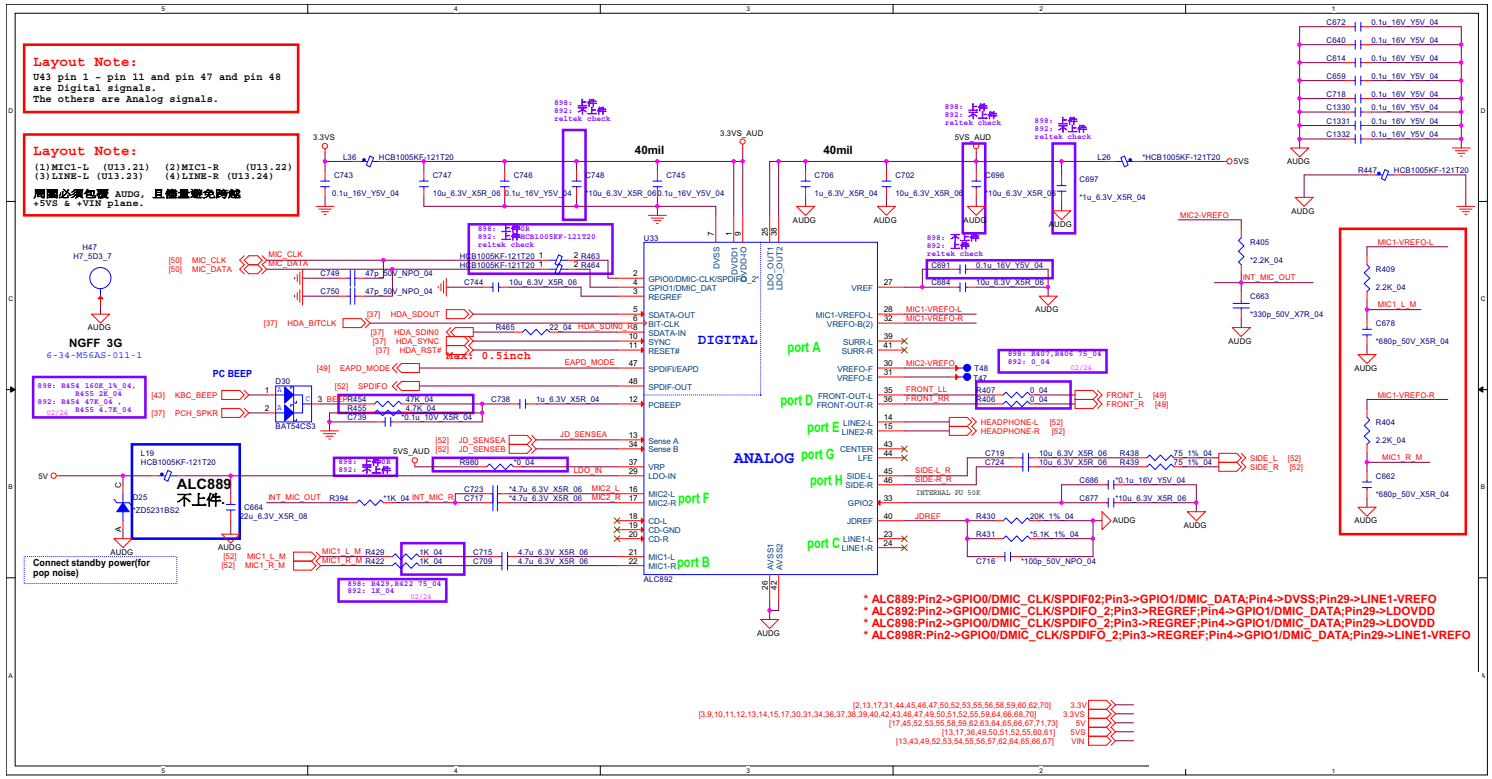


Sheet 48 of 81
Realtek ALC892

# TPA2008D2



**Sheet 49 of 81**
**TPA2008D2**

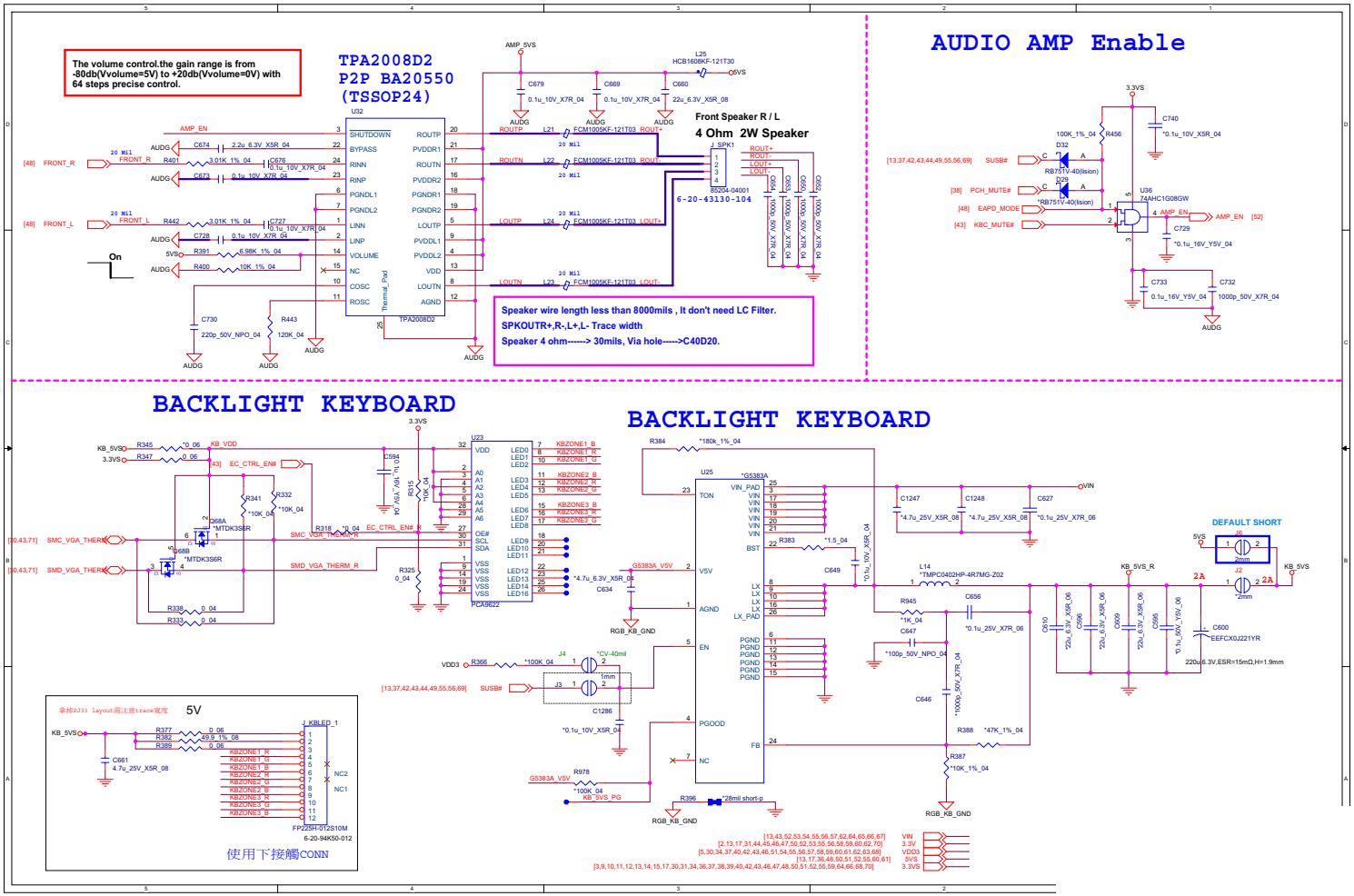

# TPM, CCD, TP

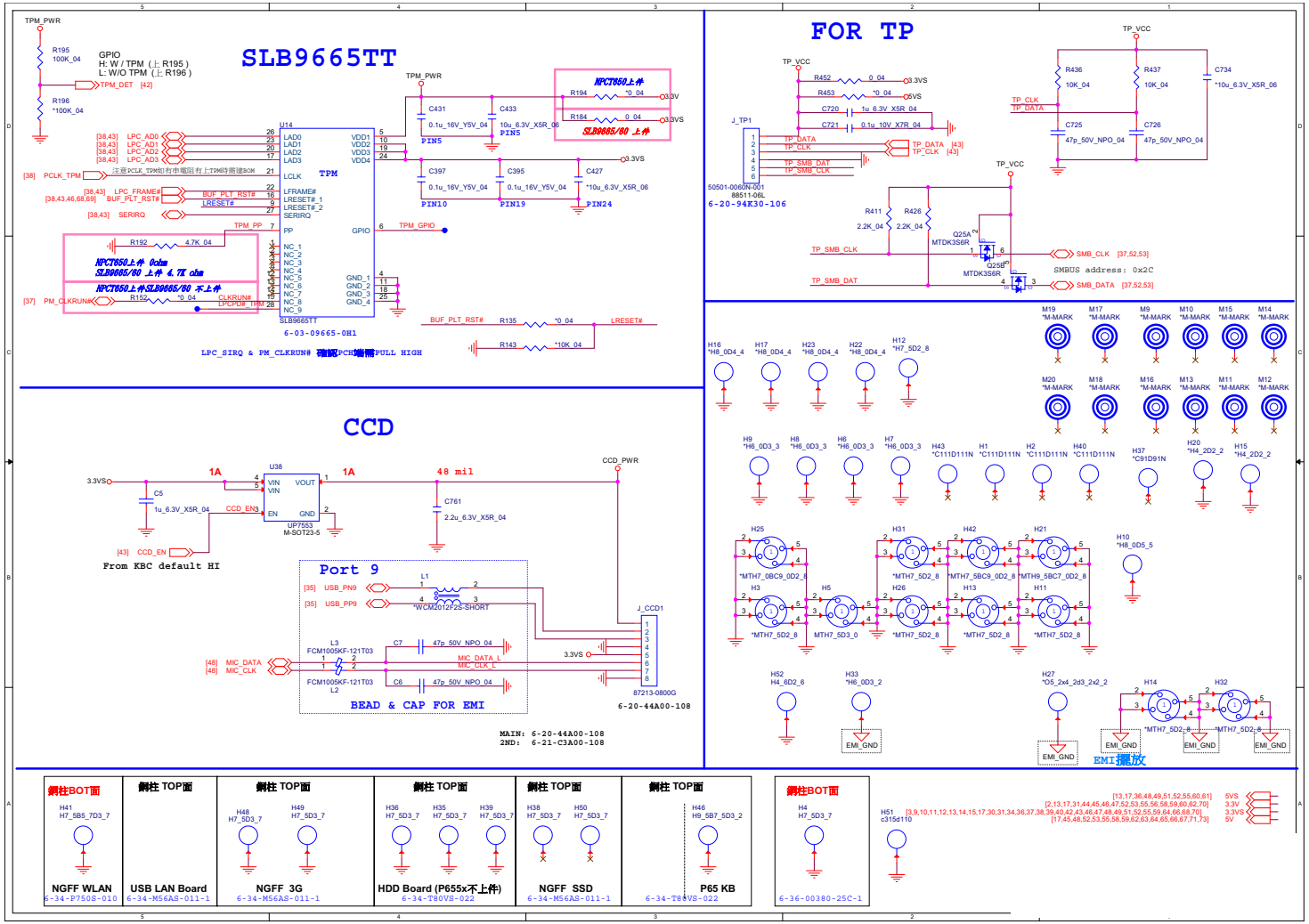


Sheet 50 of 81
TPM, CCD, TP

# Fan, LID, KB LED



**Sheet 51 of 81**
**Fan, LID, KB LED**

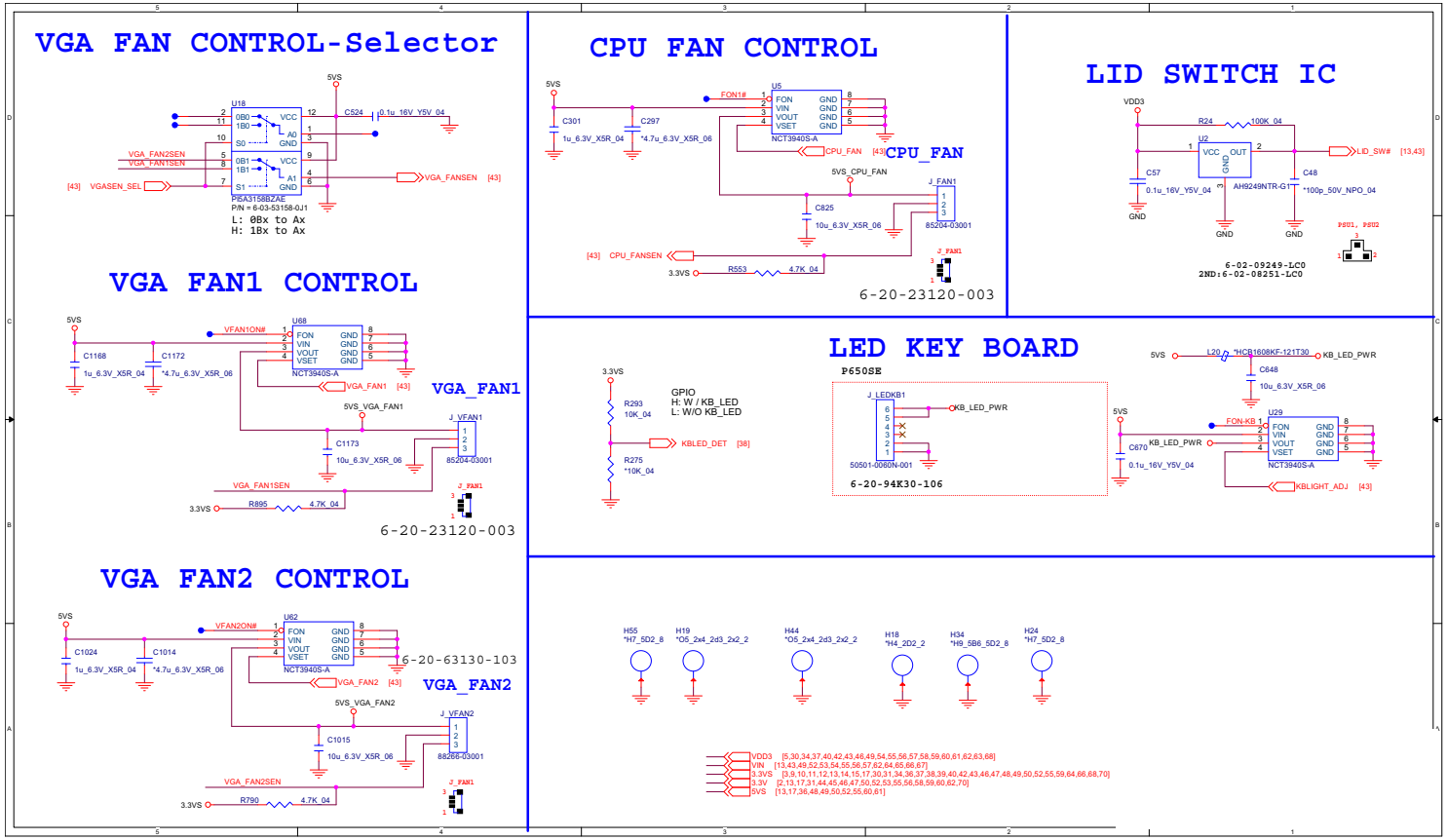

# Connector

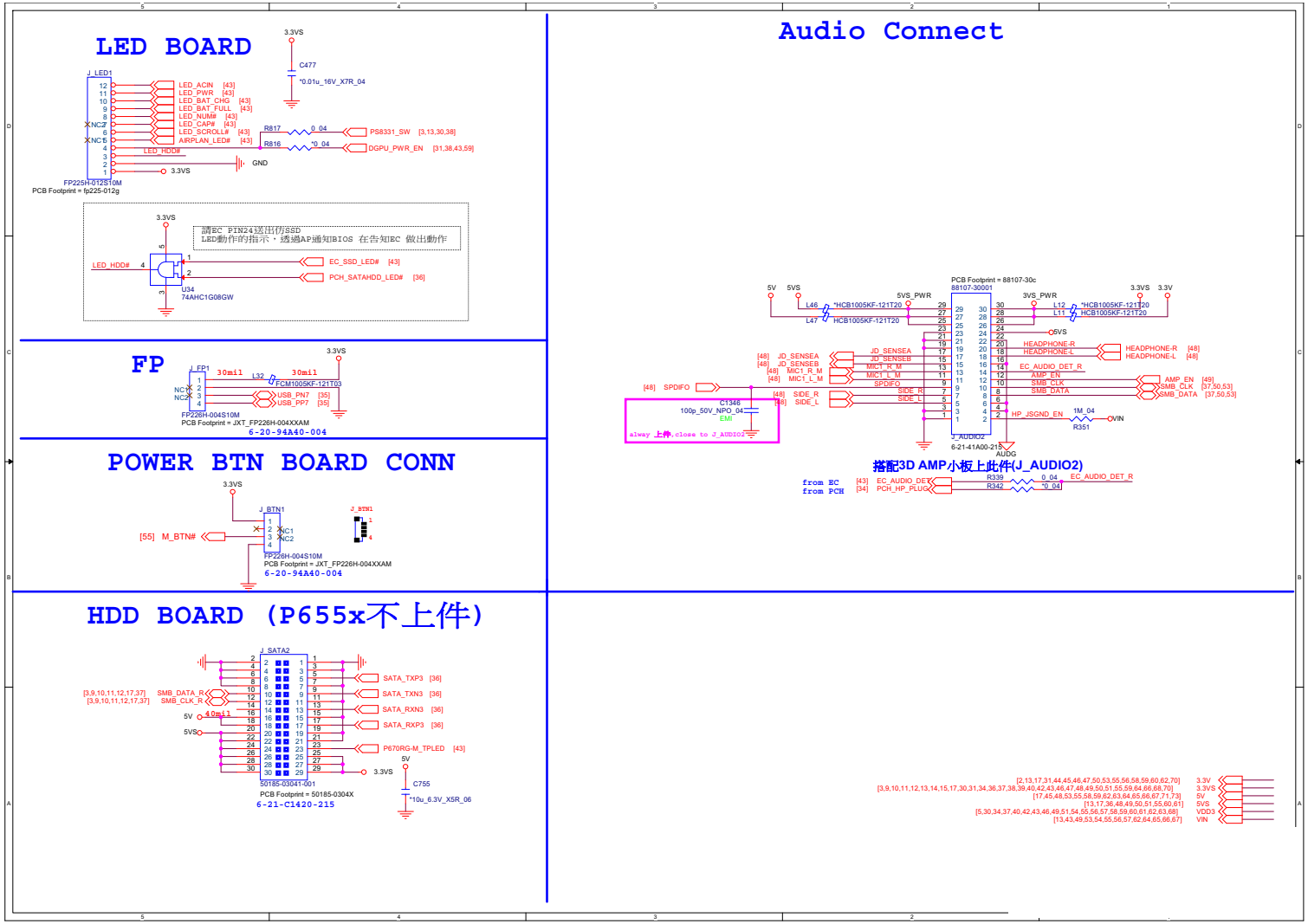


Sheet 52 of 81
Connector

# DDR 1.2V / 0.6VS



**Sheet 53 of 81**
**DDR 1.2V / 0.6VS**

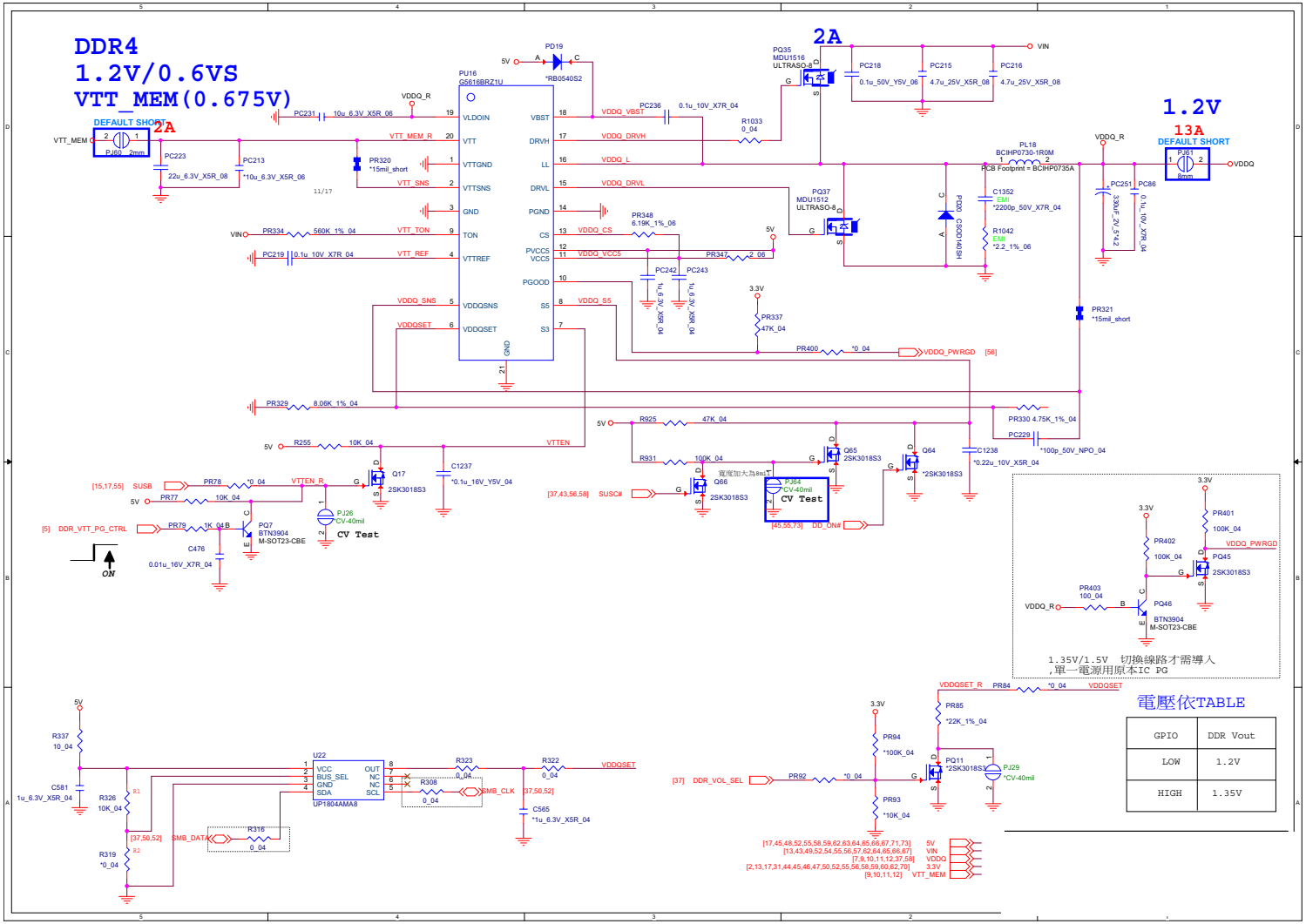

# VDD3, VDD5

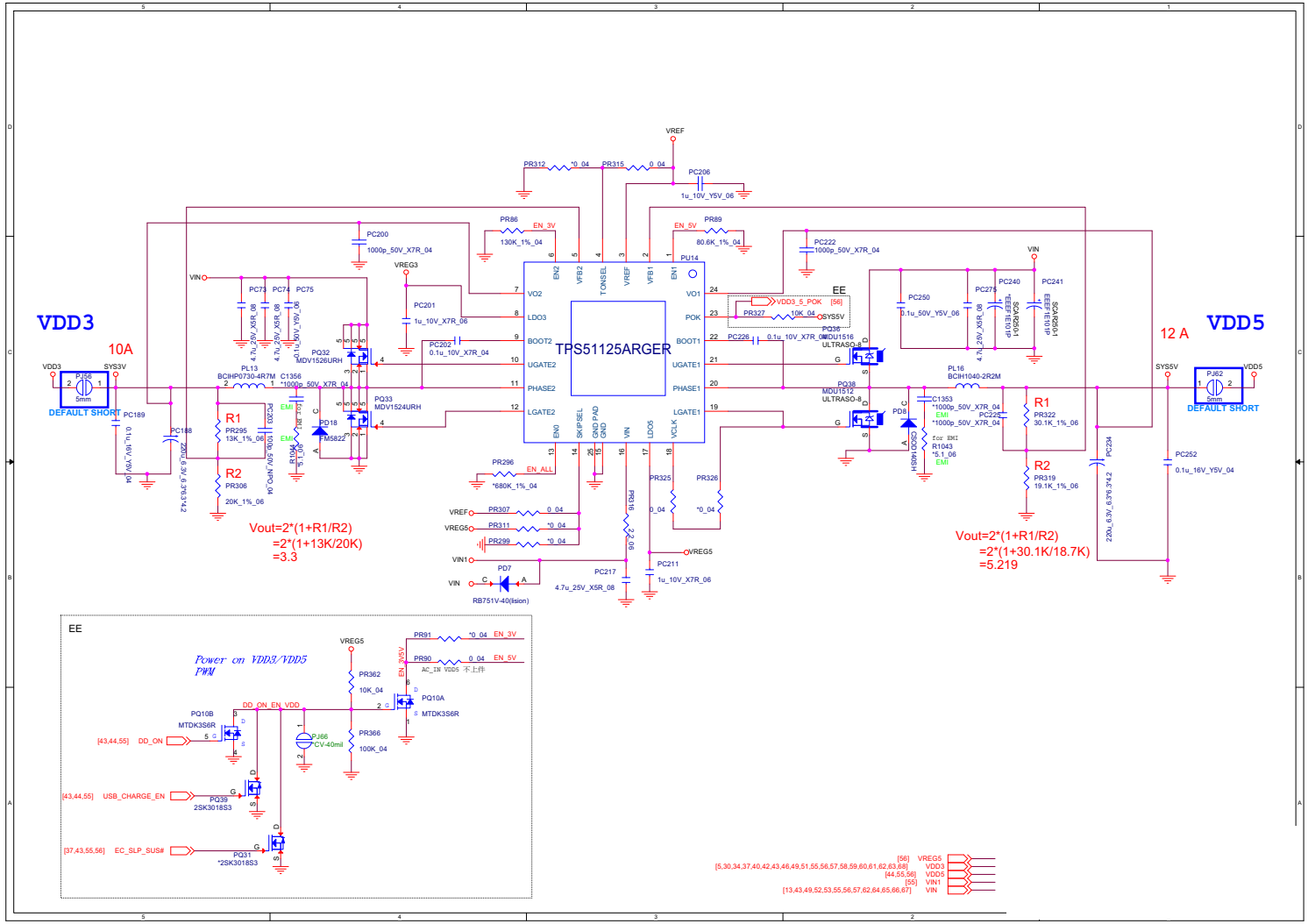


Sheet 54 of 81
VDD3, VDD5

# 5V, 5VS, 3.3V, 3.3VS, 3.3VA



**Sheet 55 of 81**
**5V, 5VS, 3.3V, 3.3VS, 3.3VA**

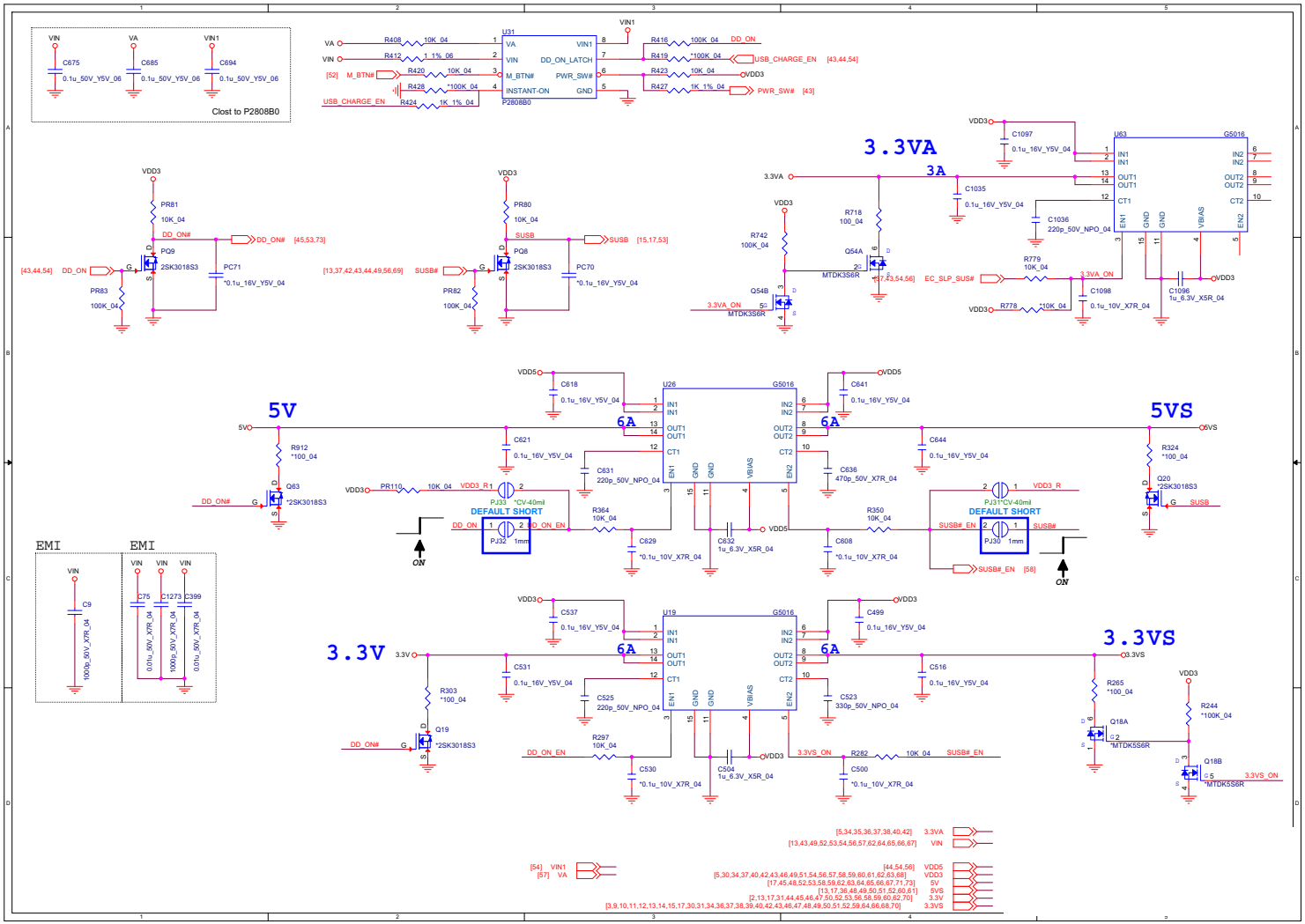

# Power 1.0V, VCCIO

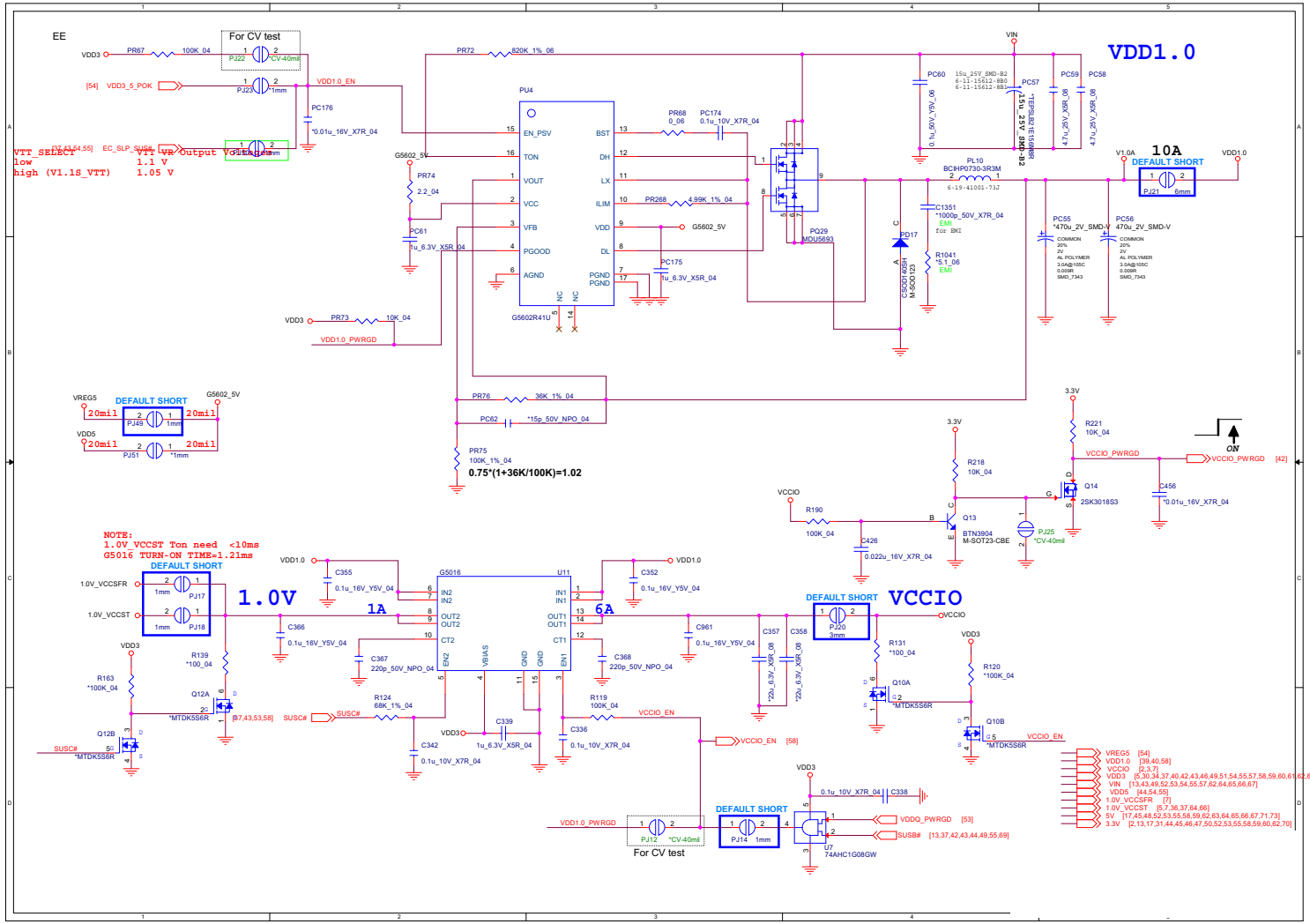


Sheet 56 of 81
Power 1.0V, VCCIO

# AC_In, Charger



**Sheet 57 of 81**
**AC_In, Charger**

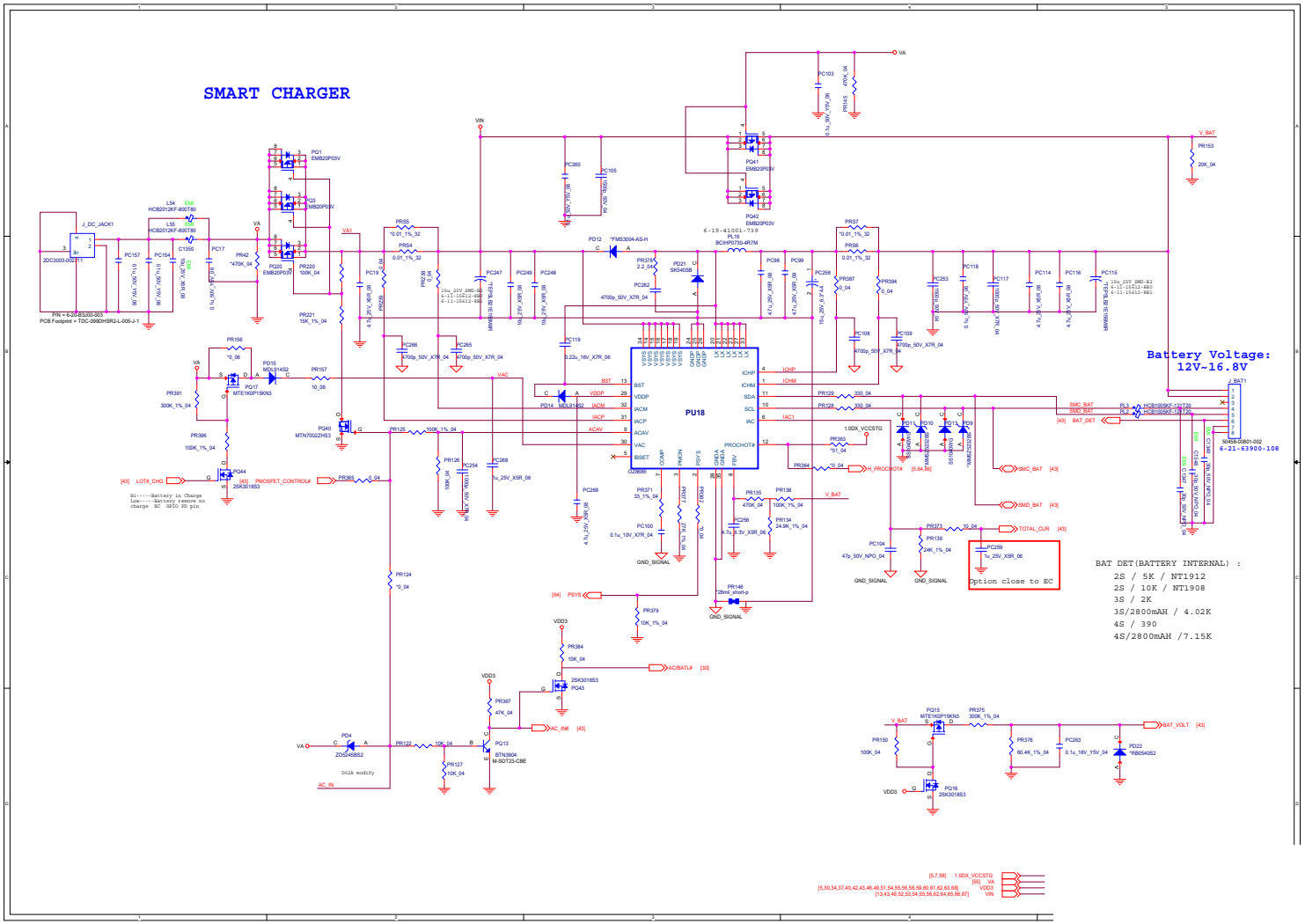

# 1.0DX_VCCSTG/VCCSFR_OC/2.5V

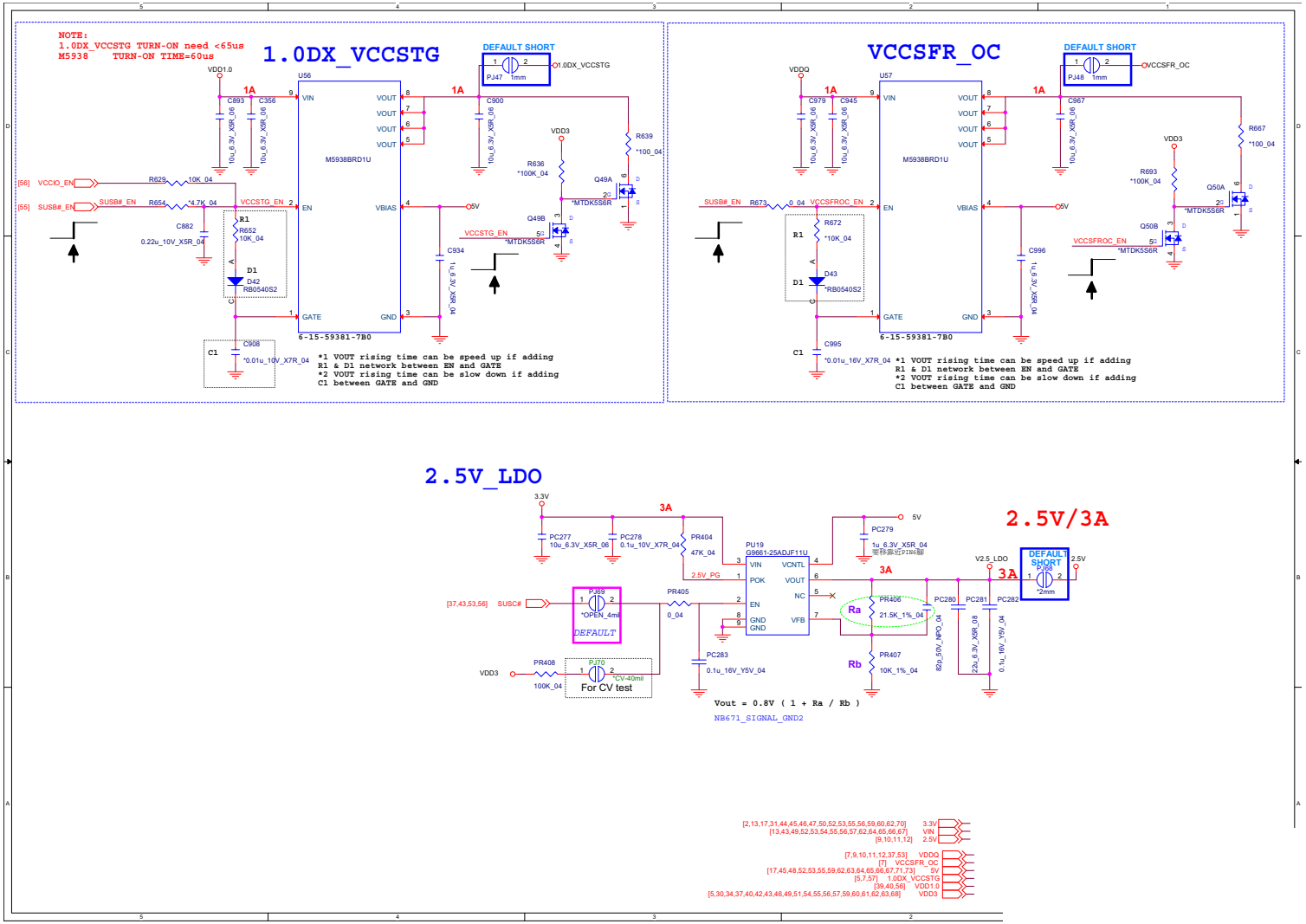


Sheet 58 of 81
1.0DX_VCCSTG/
VCCSFR_OC/2.5V

# 1V8_RUN/AON, NV3V3



**Sheet 59 of 81**
**1V8_RUN/AON, NV3V3**

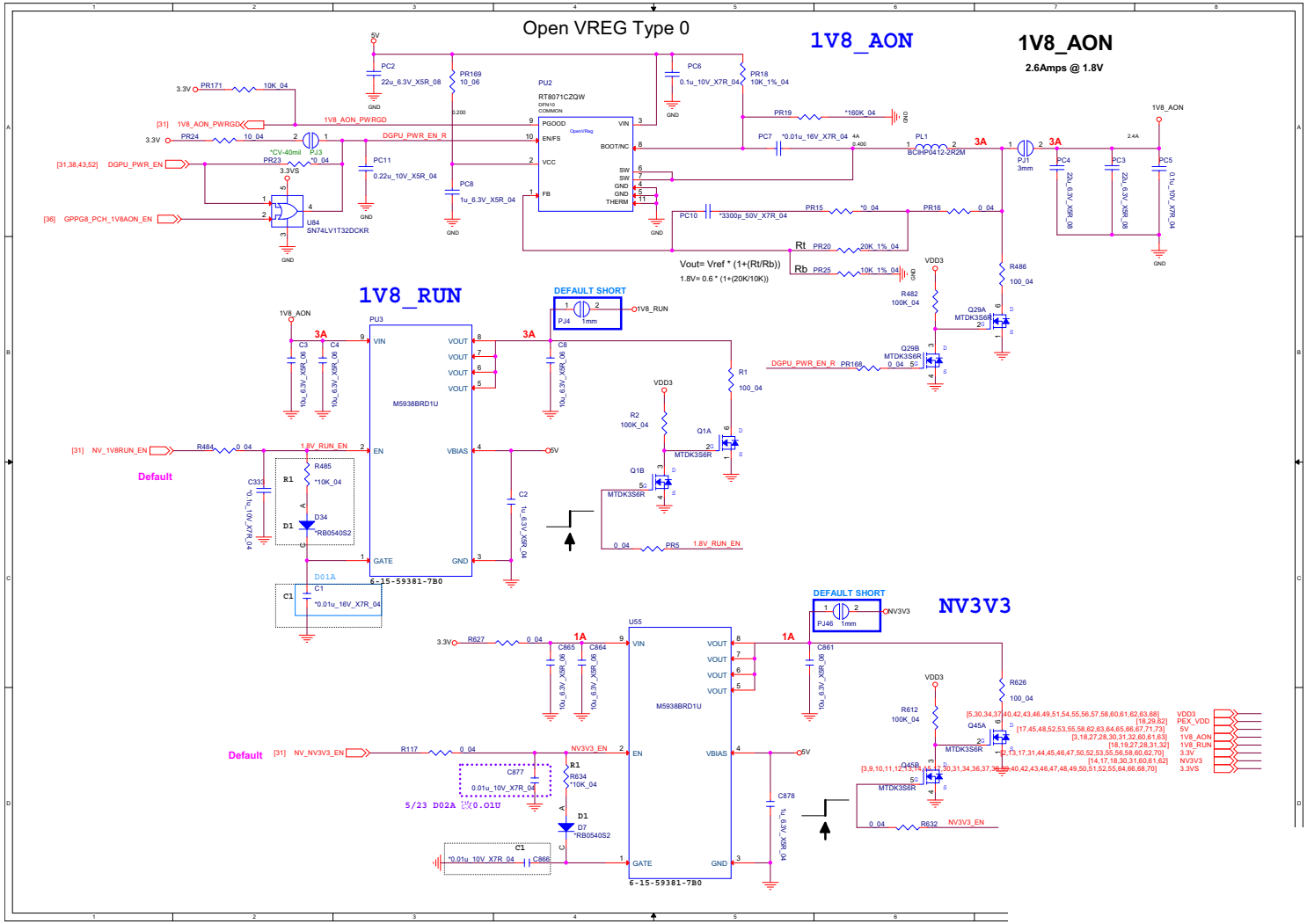

# NVVDD Phase 1 & 2

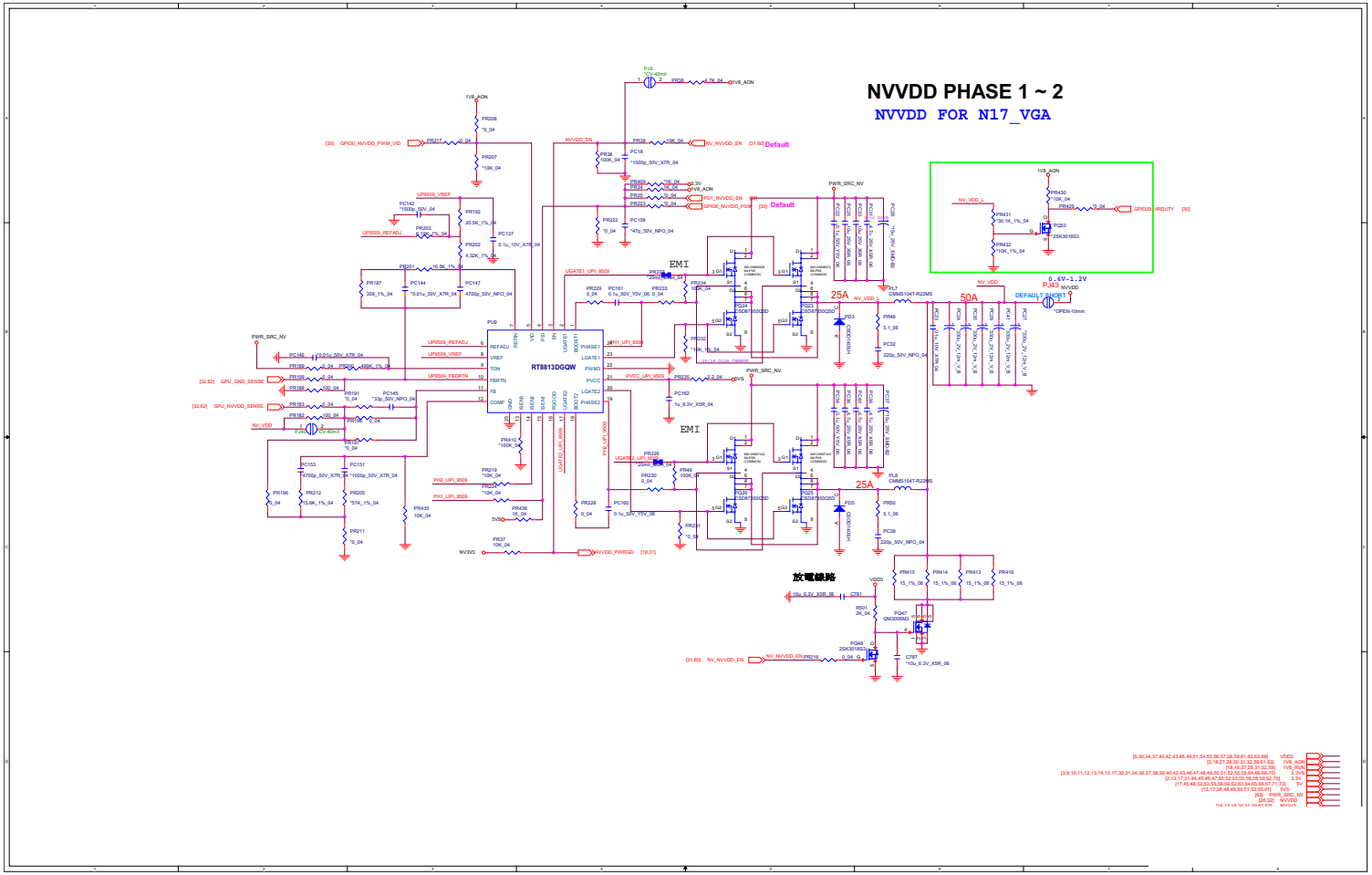


Sheet 60 of 81
NVVDD Phase 1 & 2

# NVVDDS



**Sheet 61 of 81**
**NVVDDS**

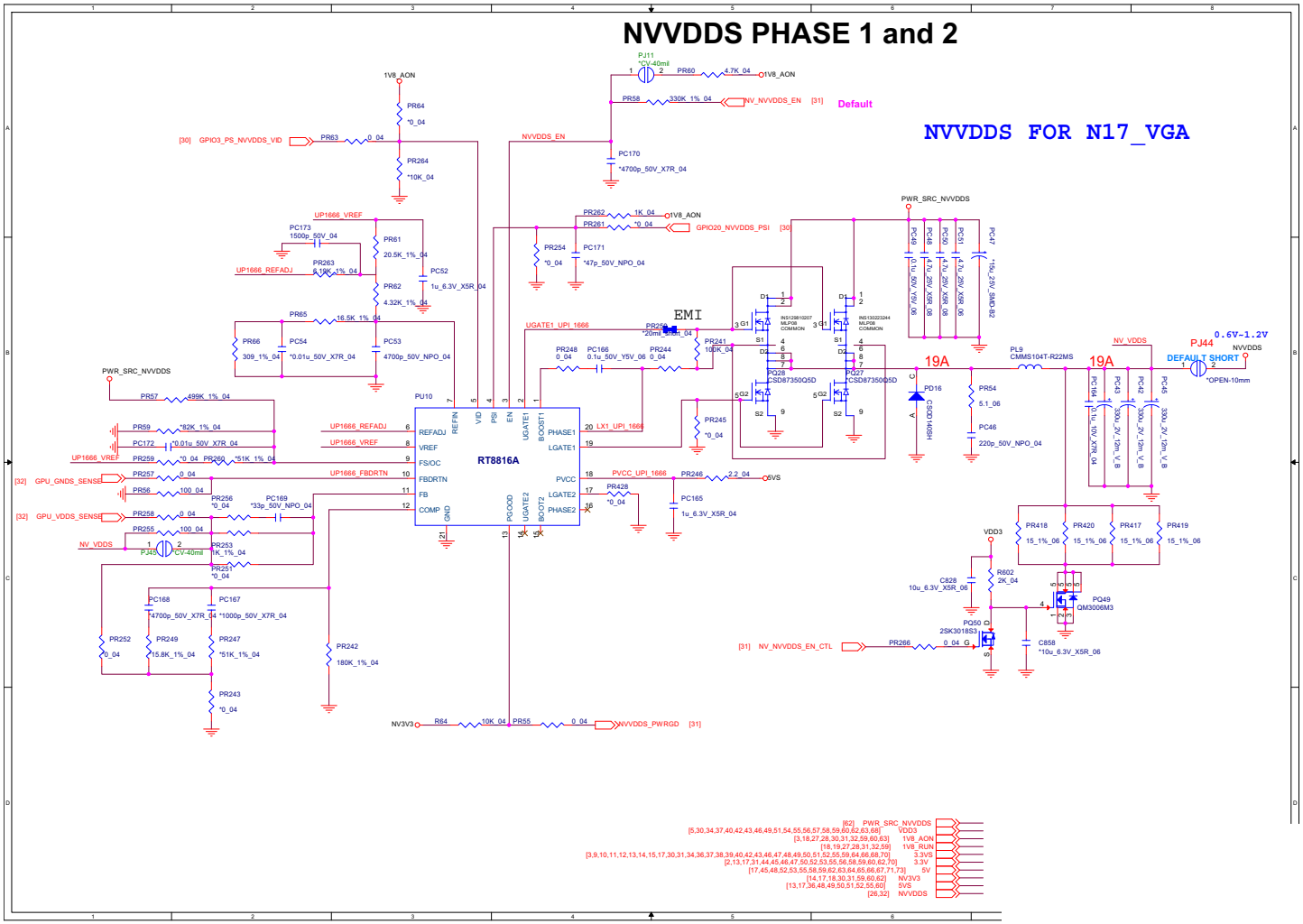

# PEX_VDD

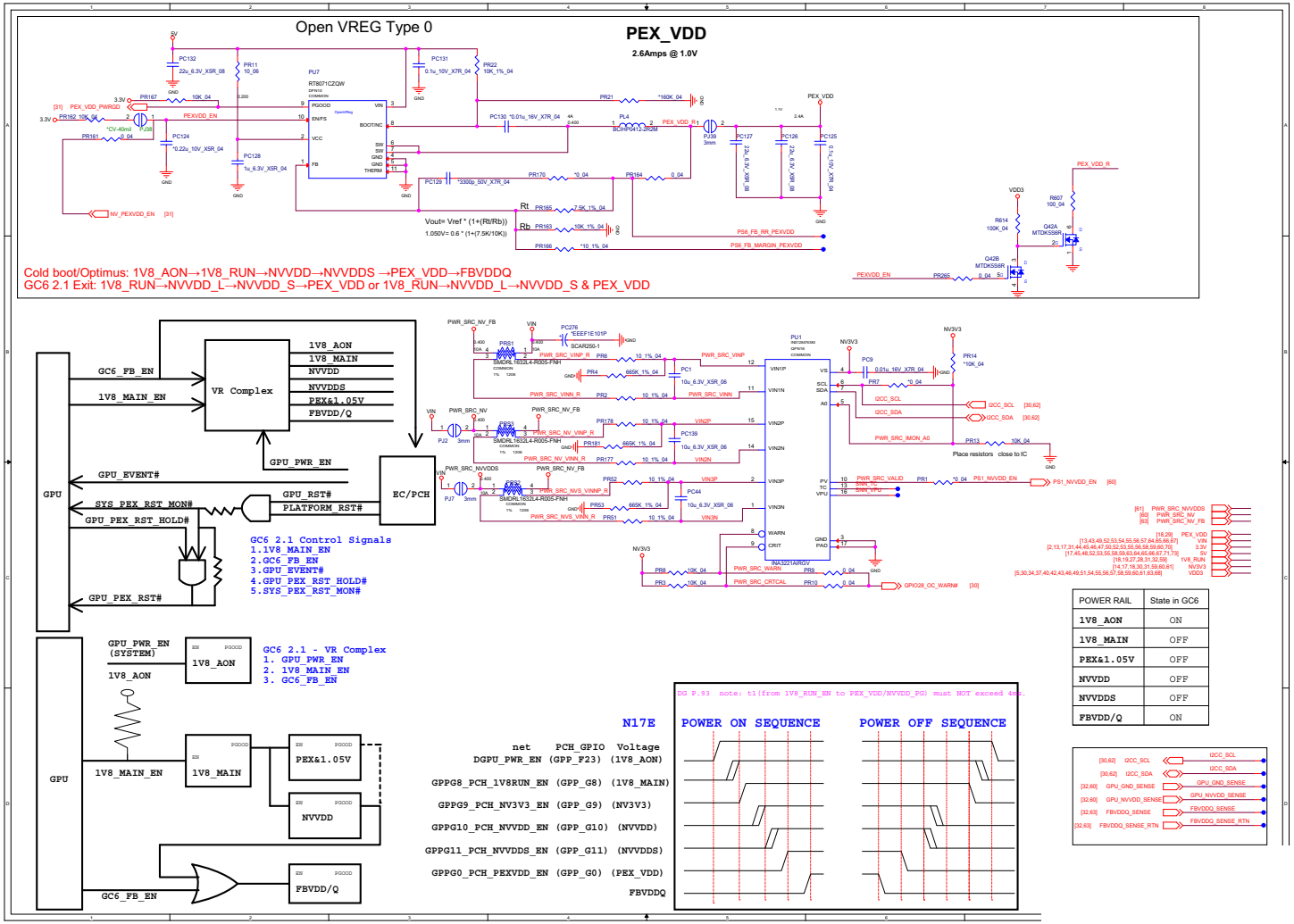


| POWER RAIL | State in GC6 |
|---|---|
| 1V8_AON | ON |
| 1V8_MAIN | OFF |
| PEX&1.05V | OFF |
| NVVDD | OFF |
| NVVDDS | OFF |
| FBVDD/Q | ON |

Sheet 62 of 81
PEX_VDD

# FBVDDQ



**Sheet 63 of 81**
**FBVDDQ**

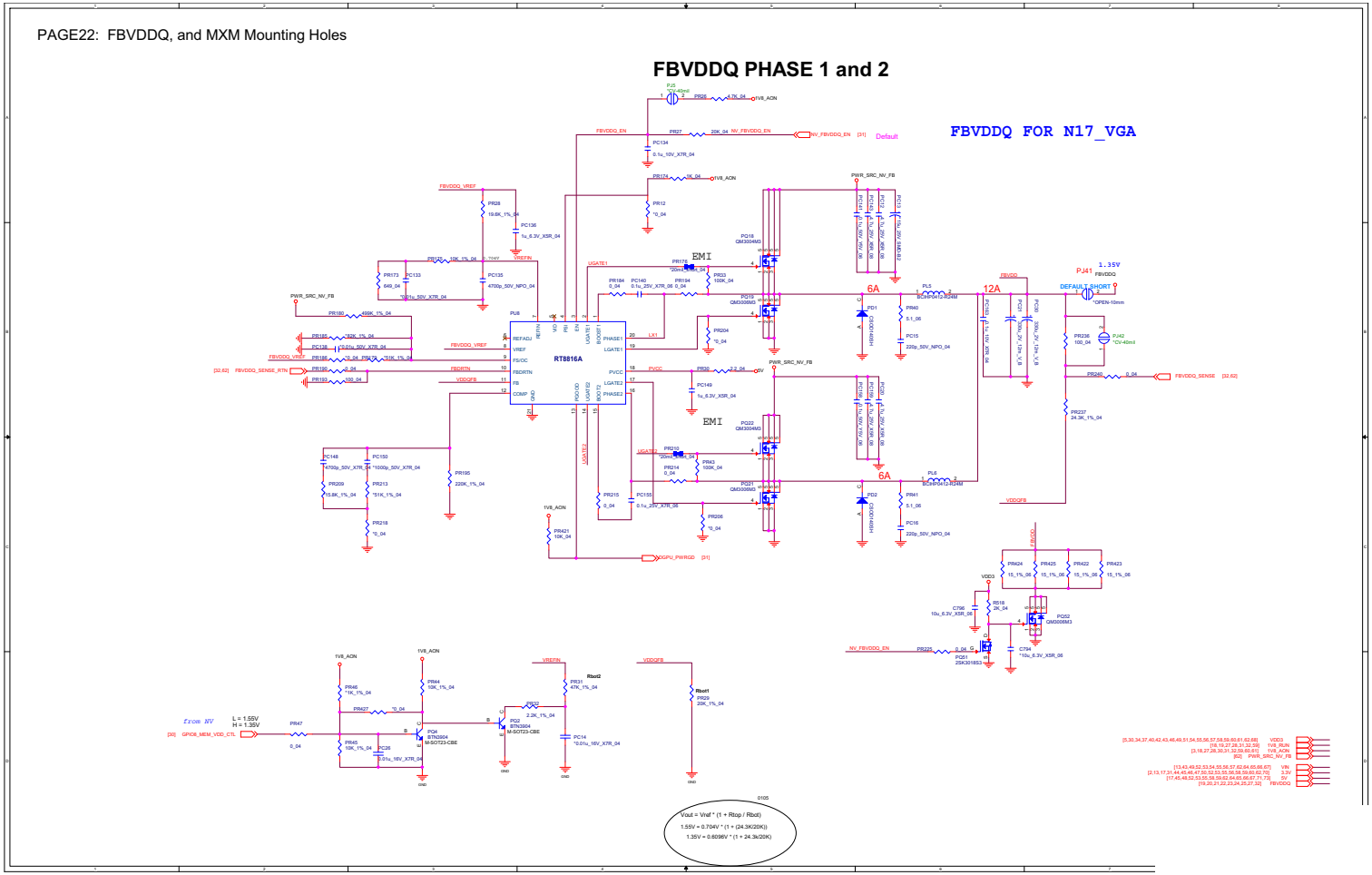

# VCC_Core & VCCSA

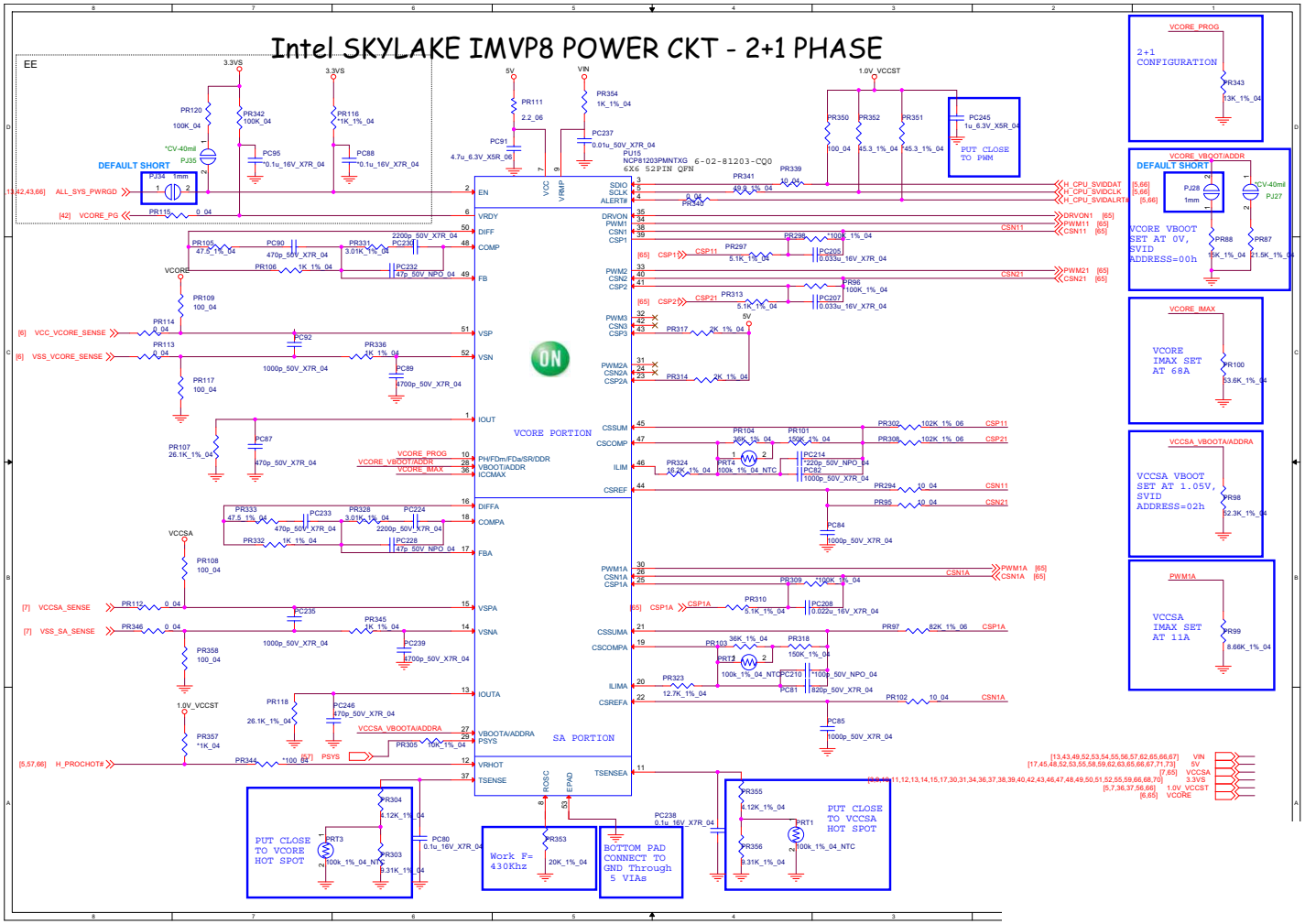


Sheet 64 of 81
VCC_Core & VCCSA

# VCore Output Stage



**Sheet 65 of 81**
**VCore Output Stage**

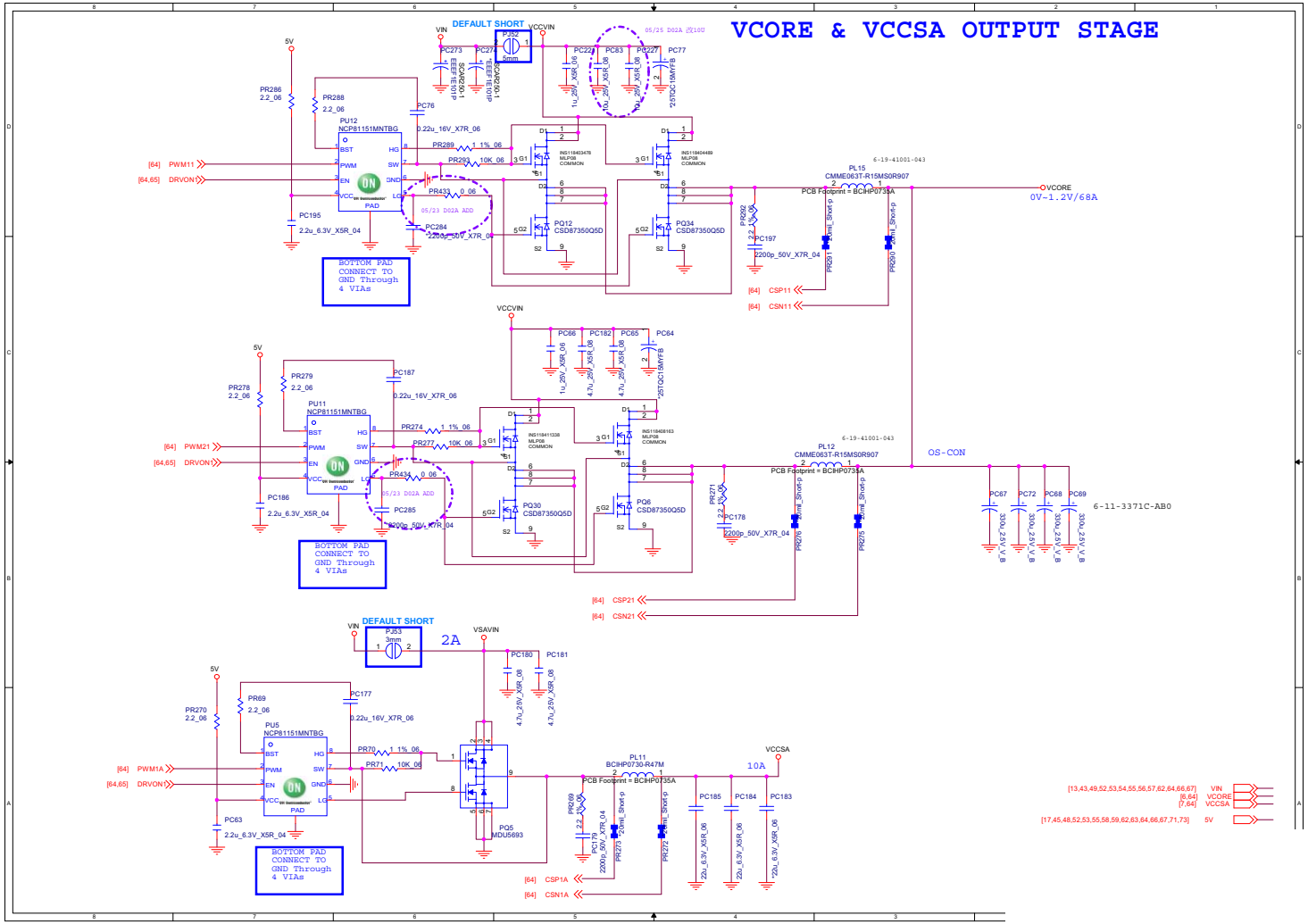

# VCCGT

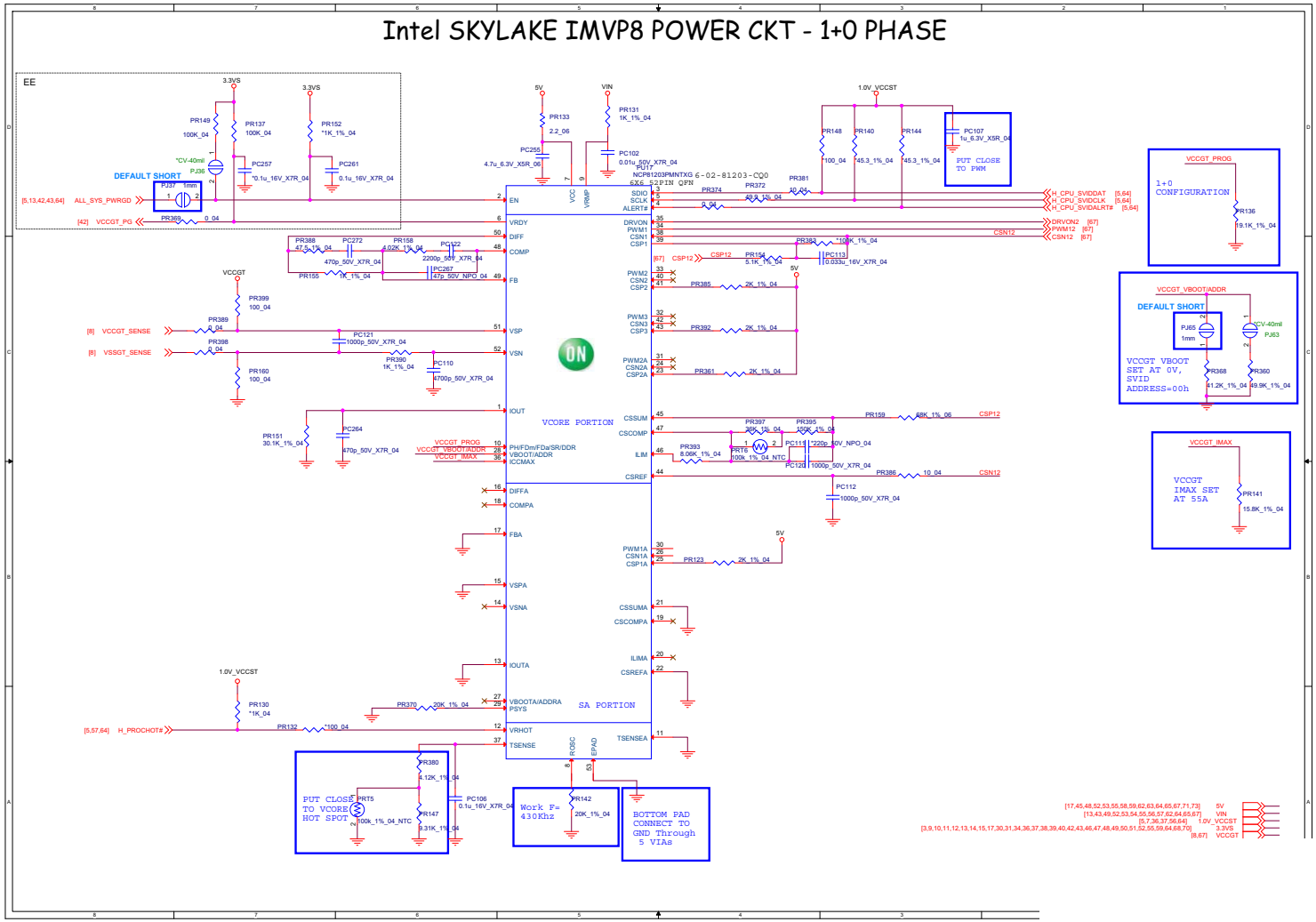


Sheet 66 of 81
VCCGT

# VCCGT Output Stage



**Sheet 67 of 81**
**VCCGT Output Stage**

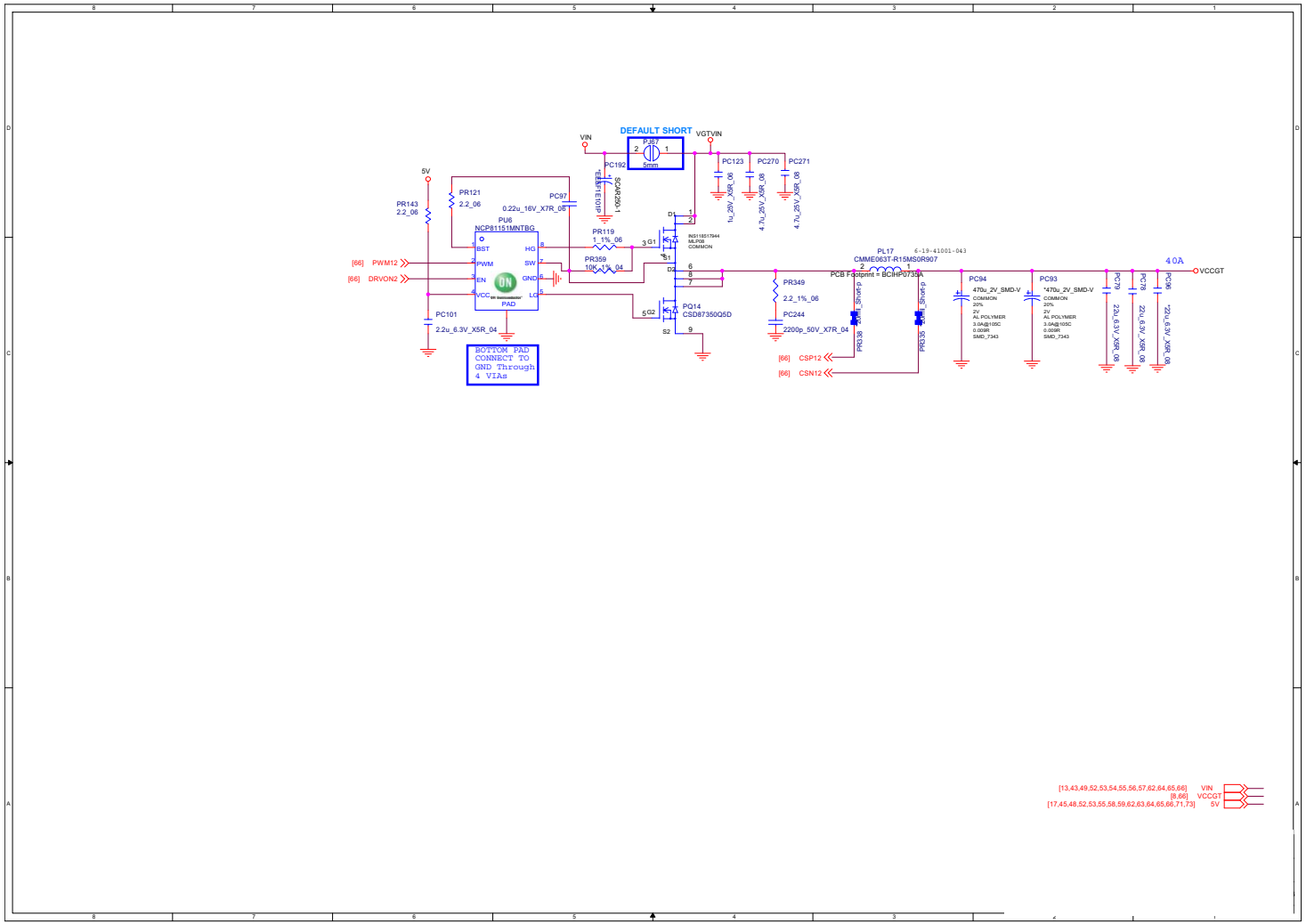

# LAN RTL8411, Card Reader

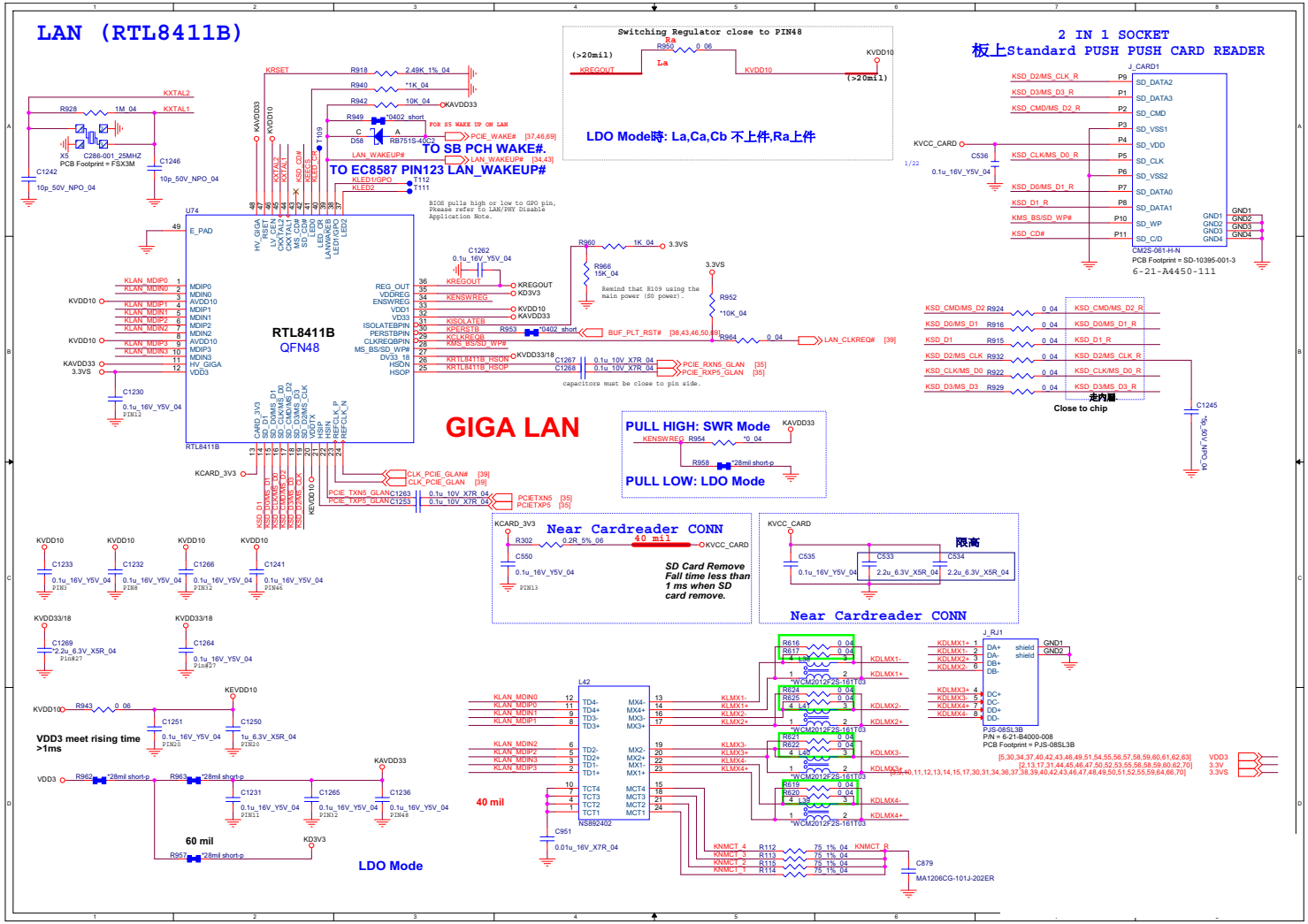


Sheet 68 of 81
LAN RTL8411, Card Reader

# AR_TBT



**Sheet 69 of 81**
**AR_TBT**

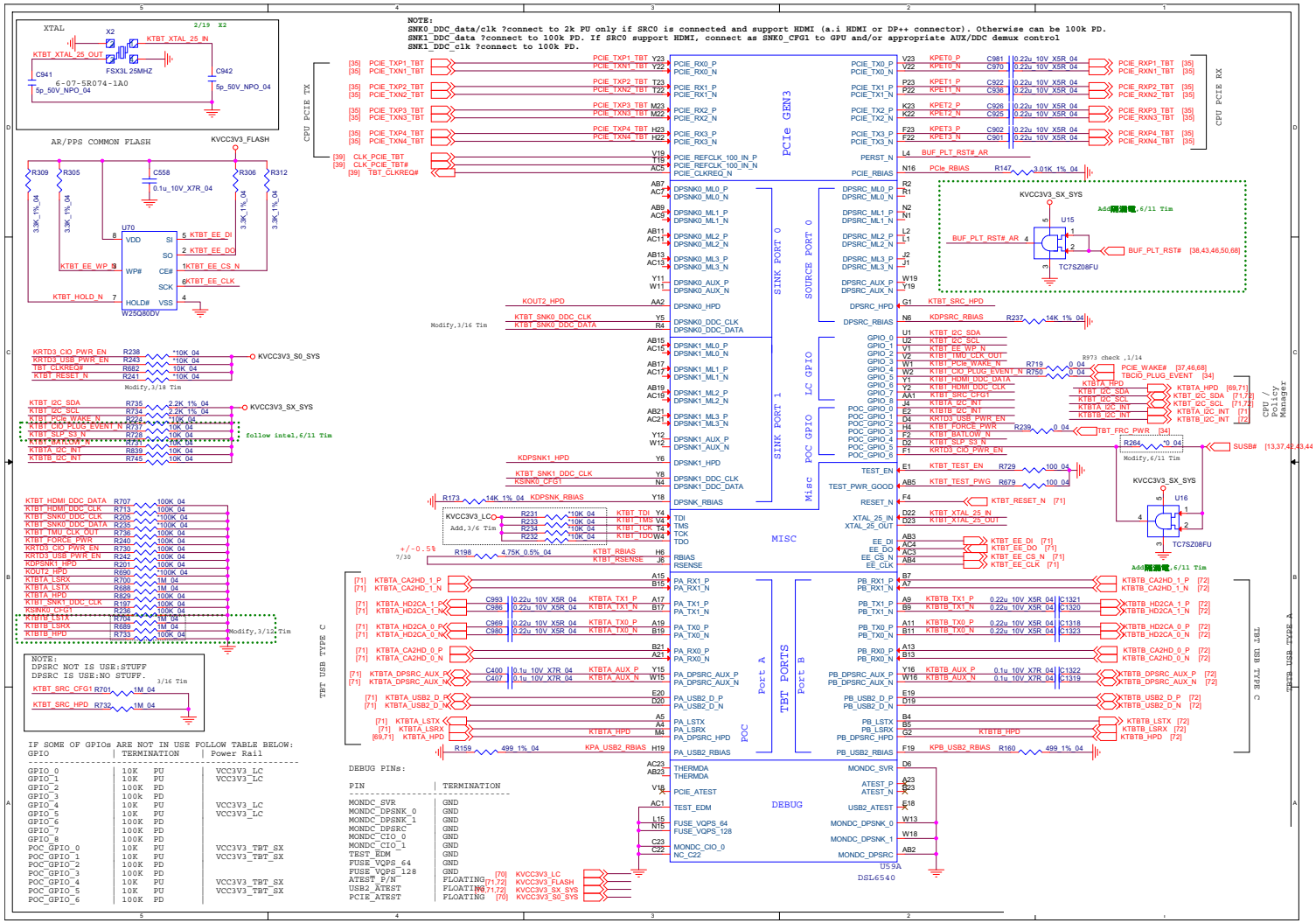

# AR_Power

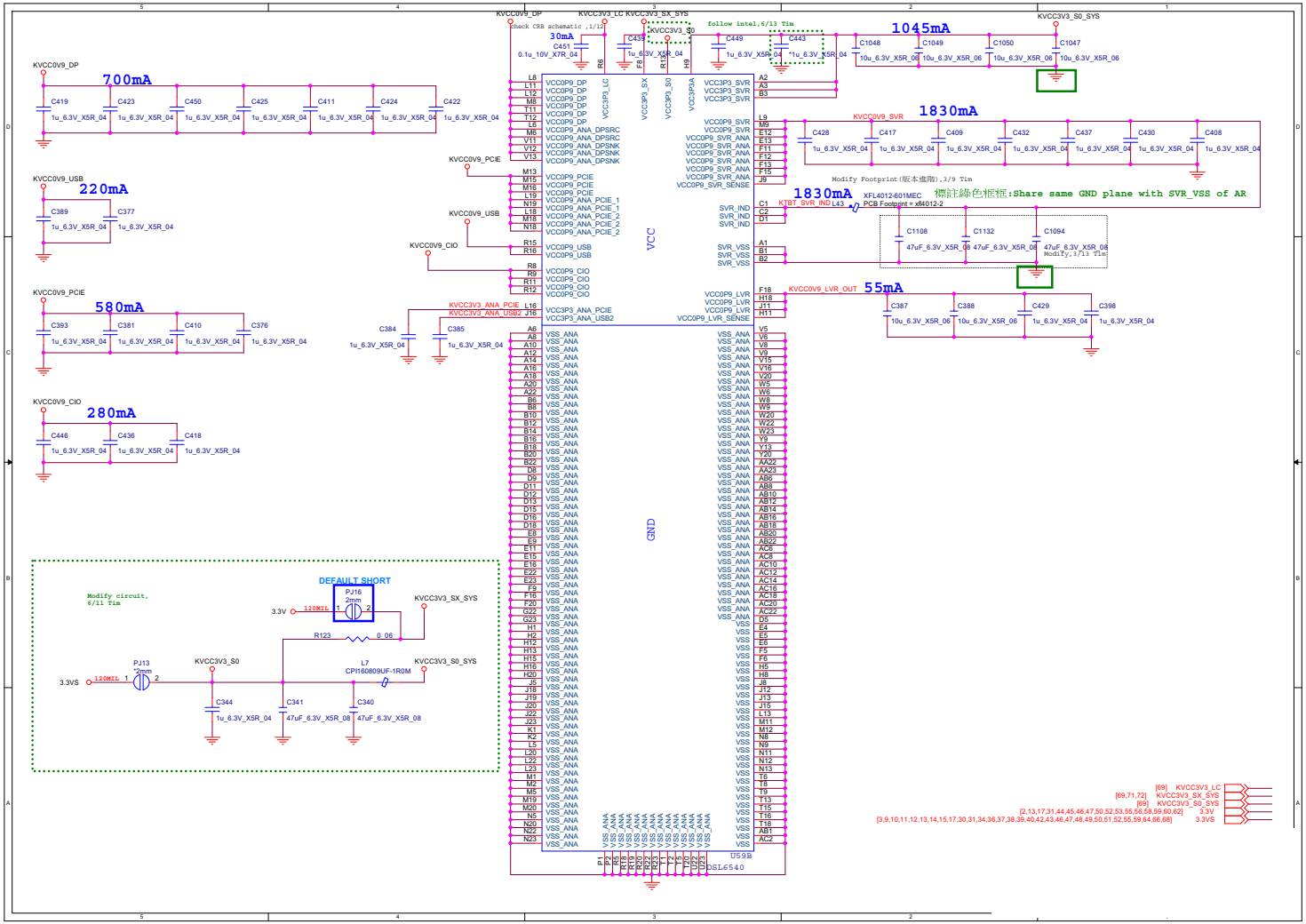


Sheet 70 of 81
AR_Power

# TPS65982, Type C



**Sheet 71 of 81**
**TPS65982, Type C**

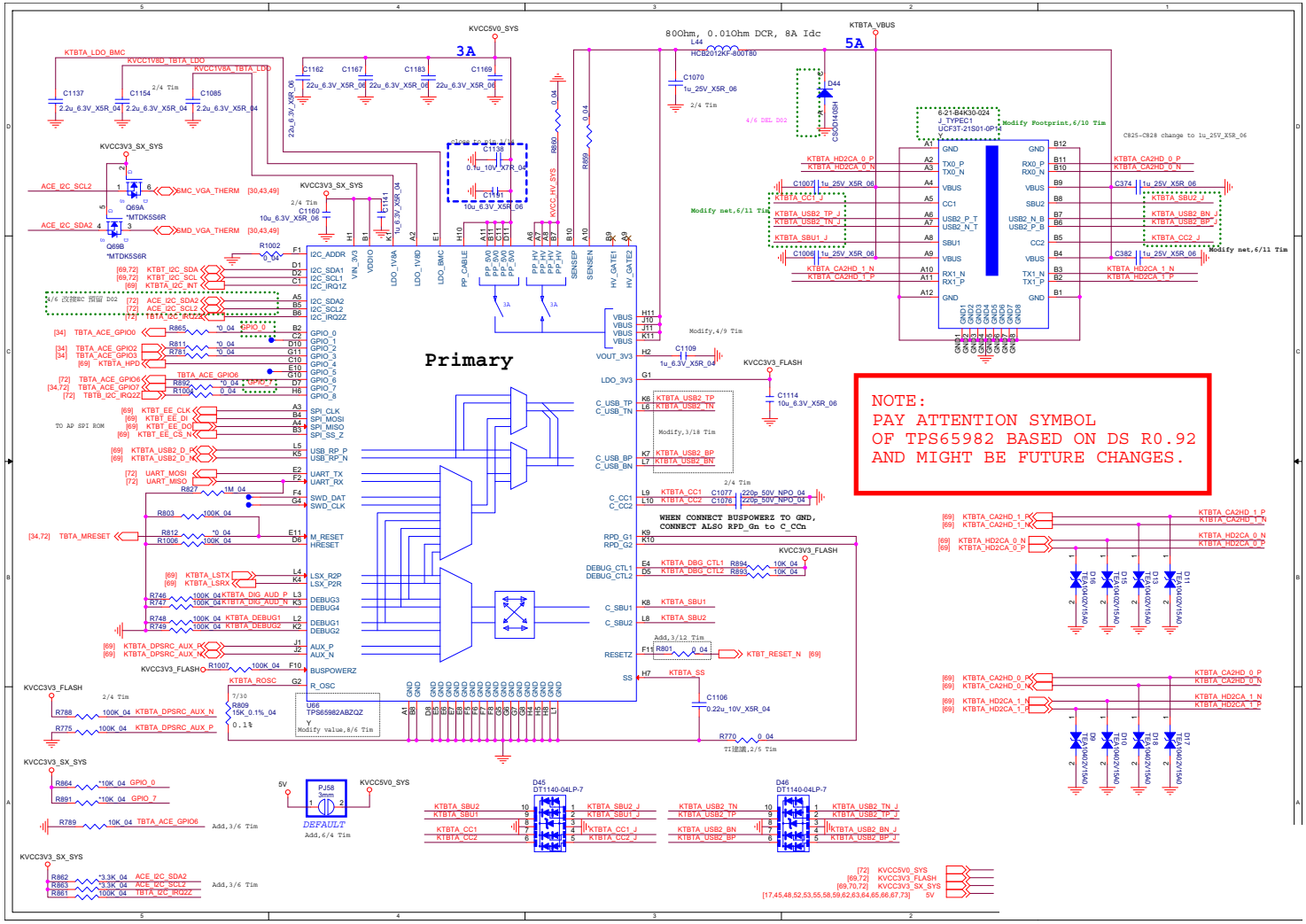

# TPS65982, Type A

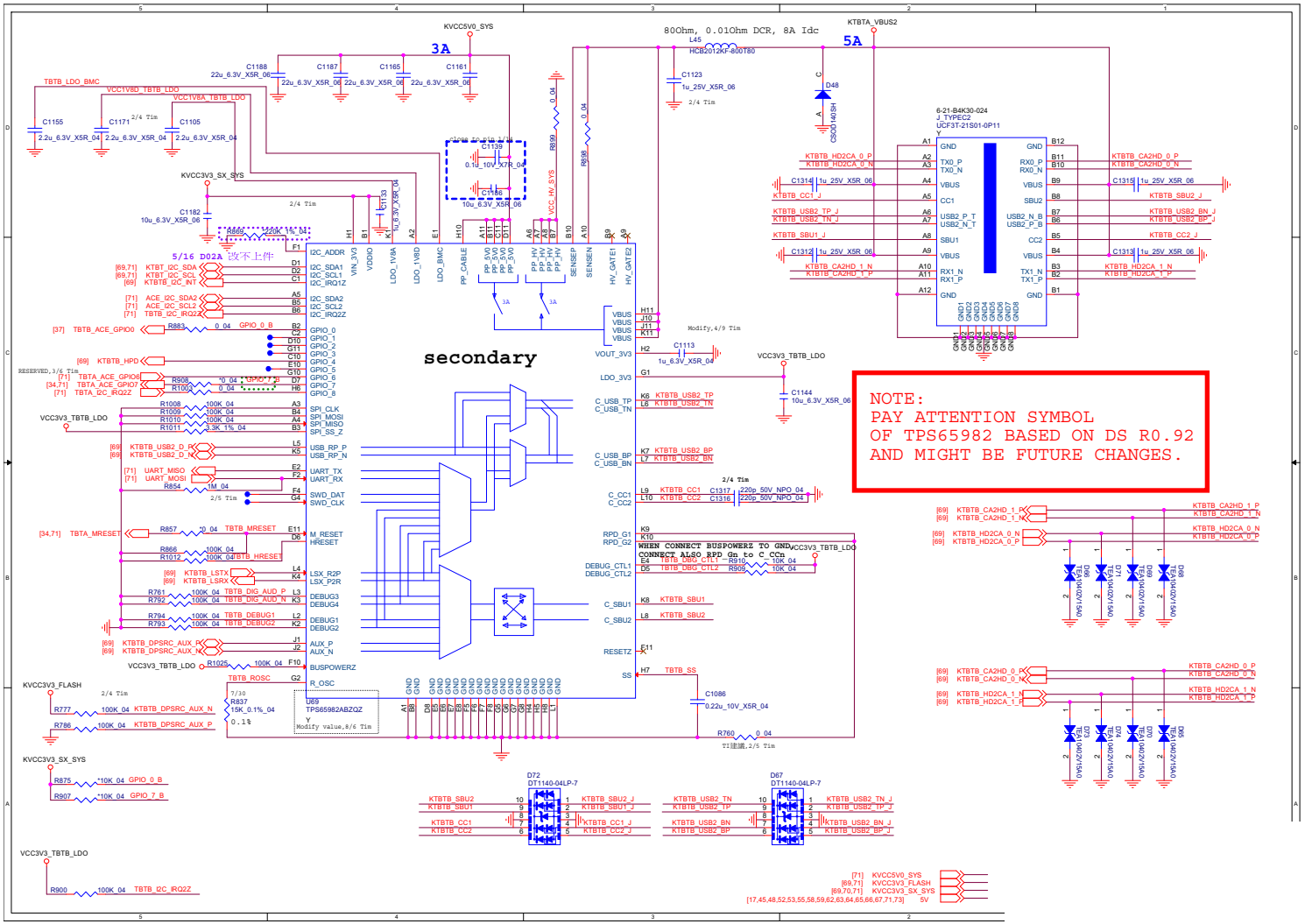


Sheet 72 of 81
TPS65982, Type A

B.Schematic Diagrams

# USB, Type A



**Sheet 73 of 81**
**USB, Type A**

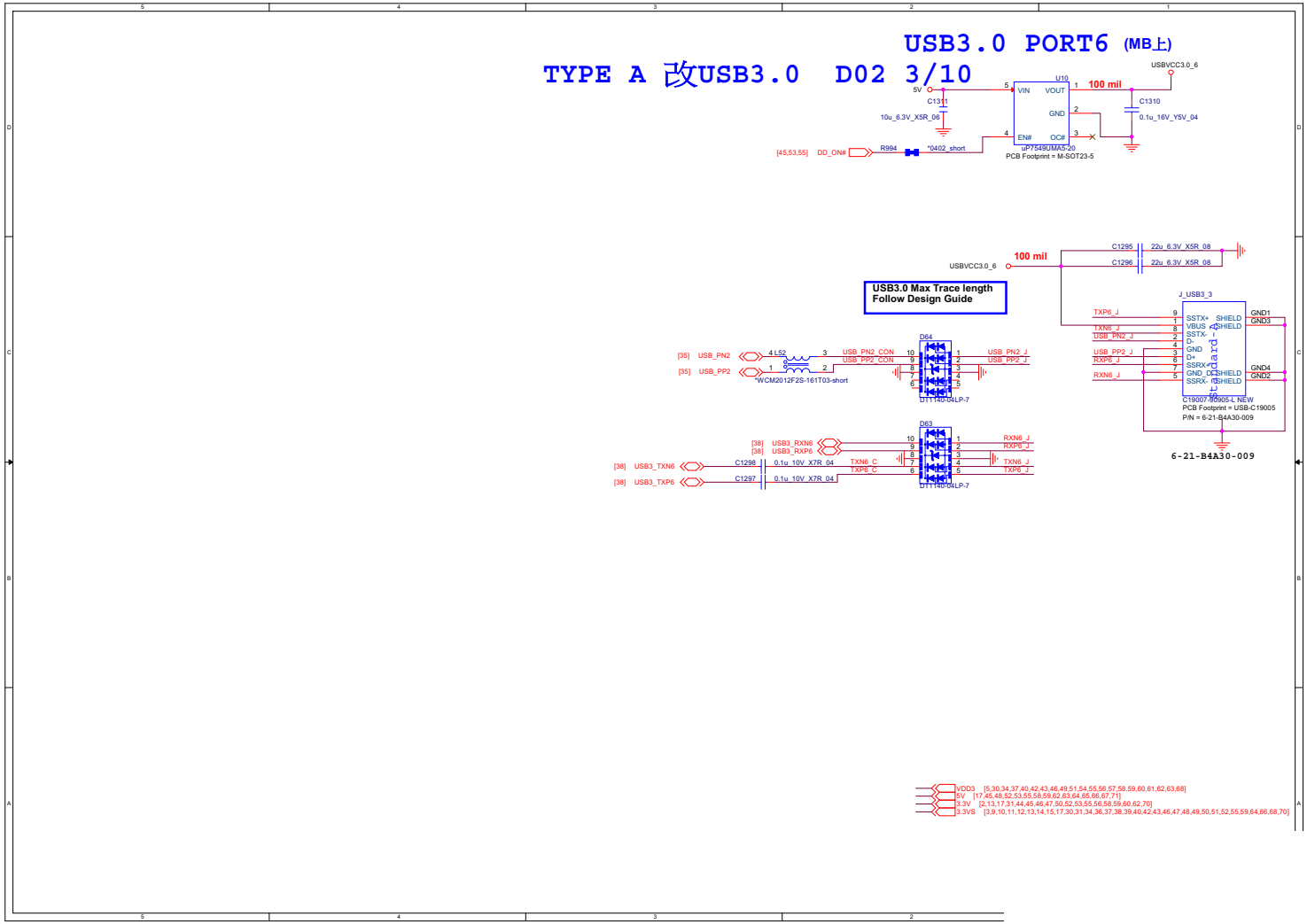

# Audio Board_3D AMP

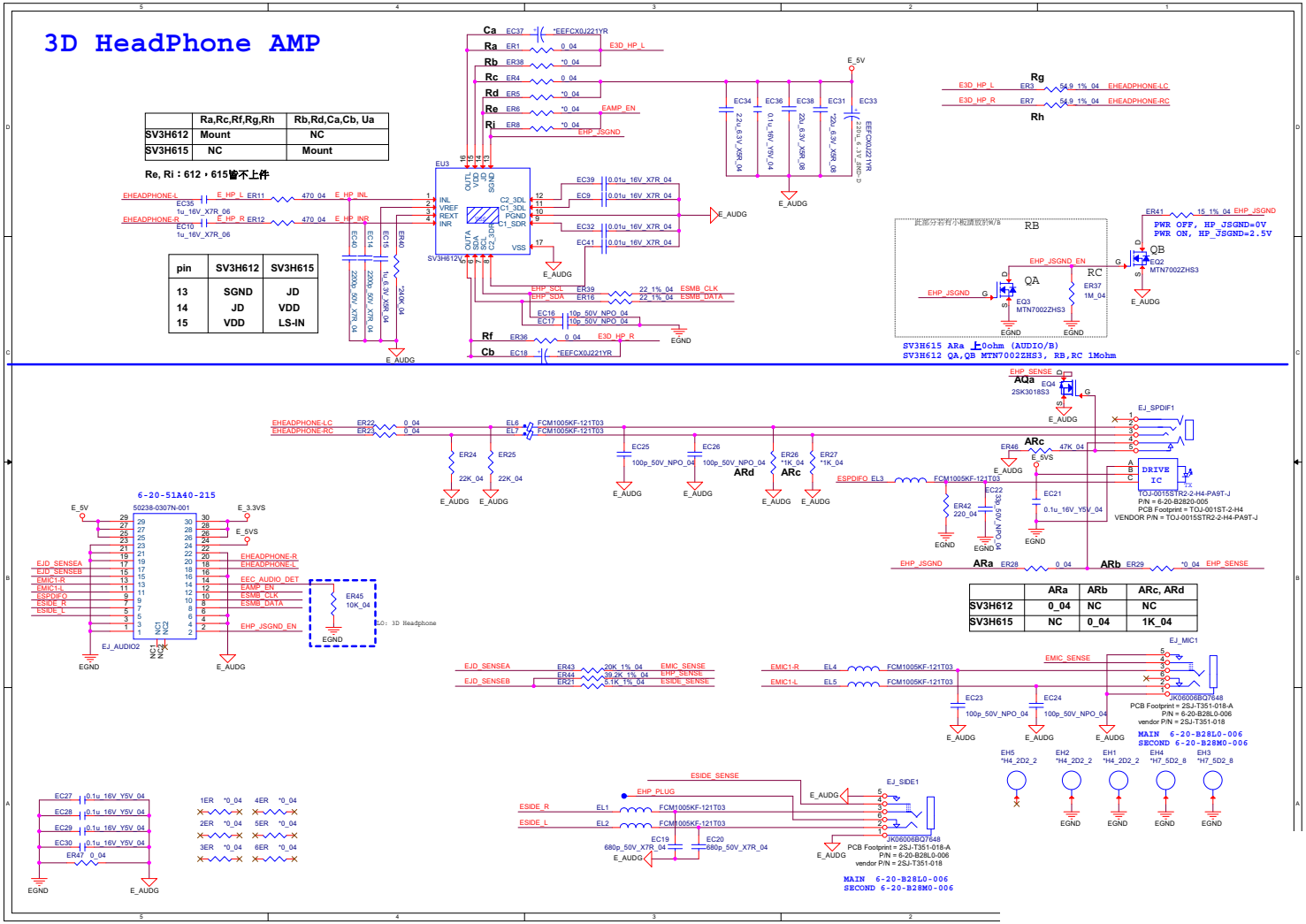


Sheet 74 of 81
Audio Board_3D AMP

# HDD Board



**Sheet 75 of 81**
**HDD Board**

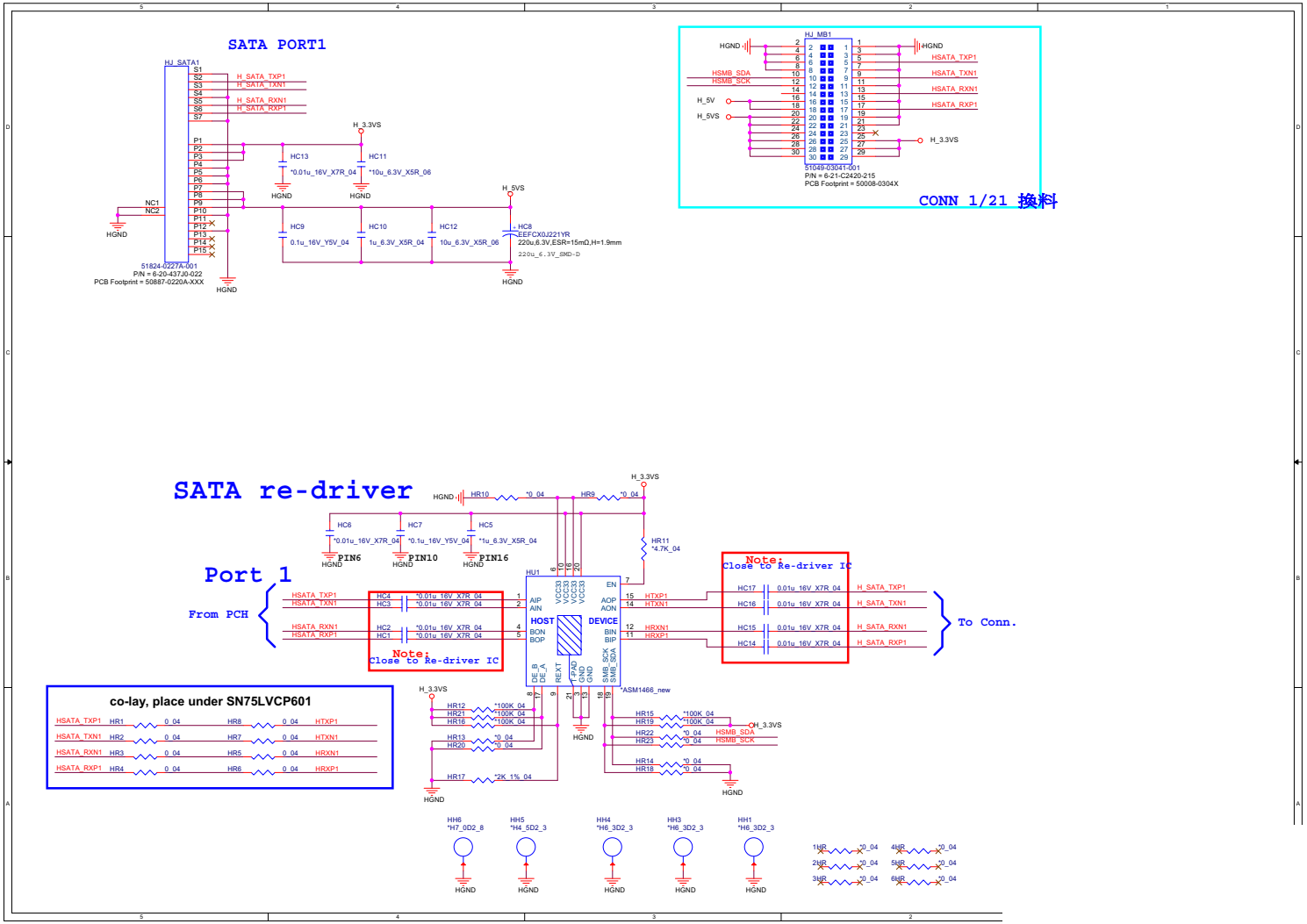

# Power Board

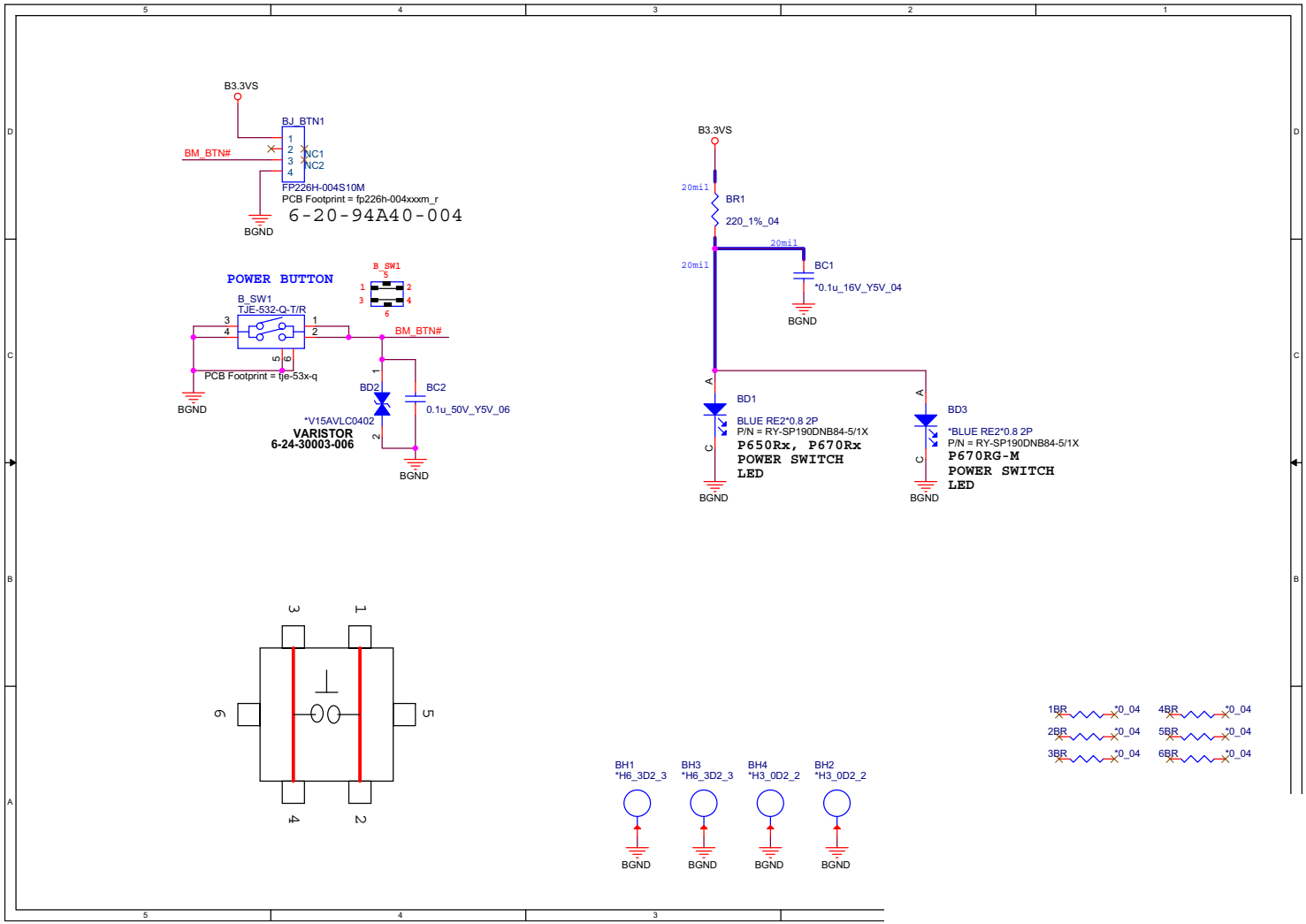


Sheet 76 of 81
Power Board

# LED Board



**Sheet 77 of 81**
**LED Board**

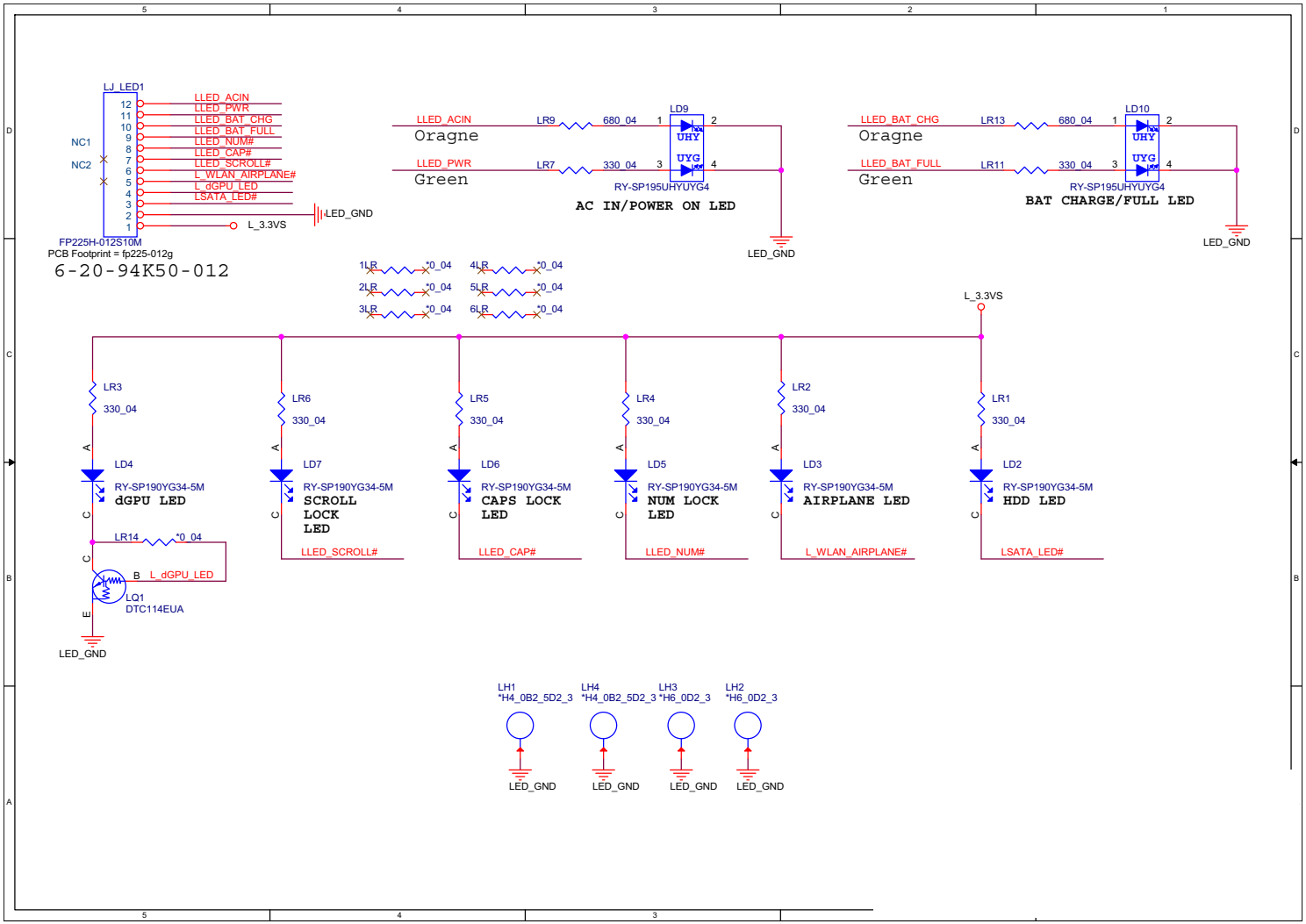

# Click Board

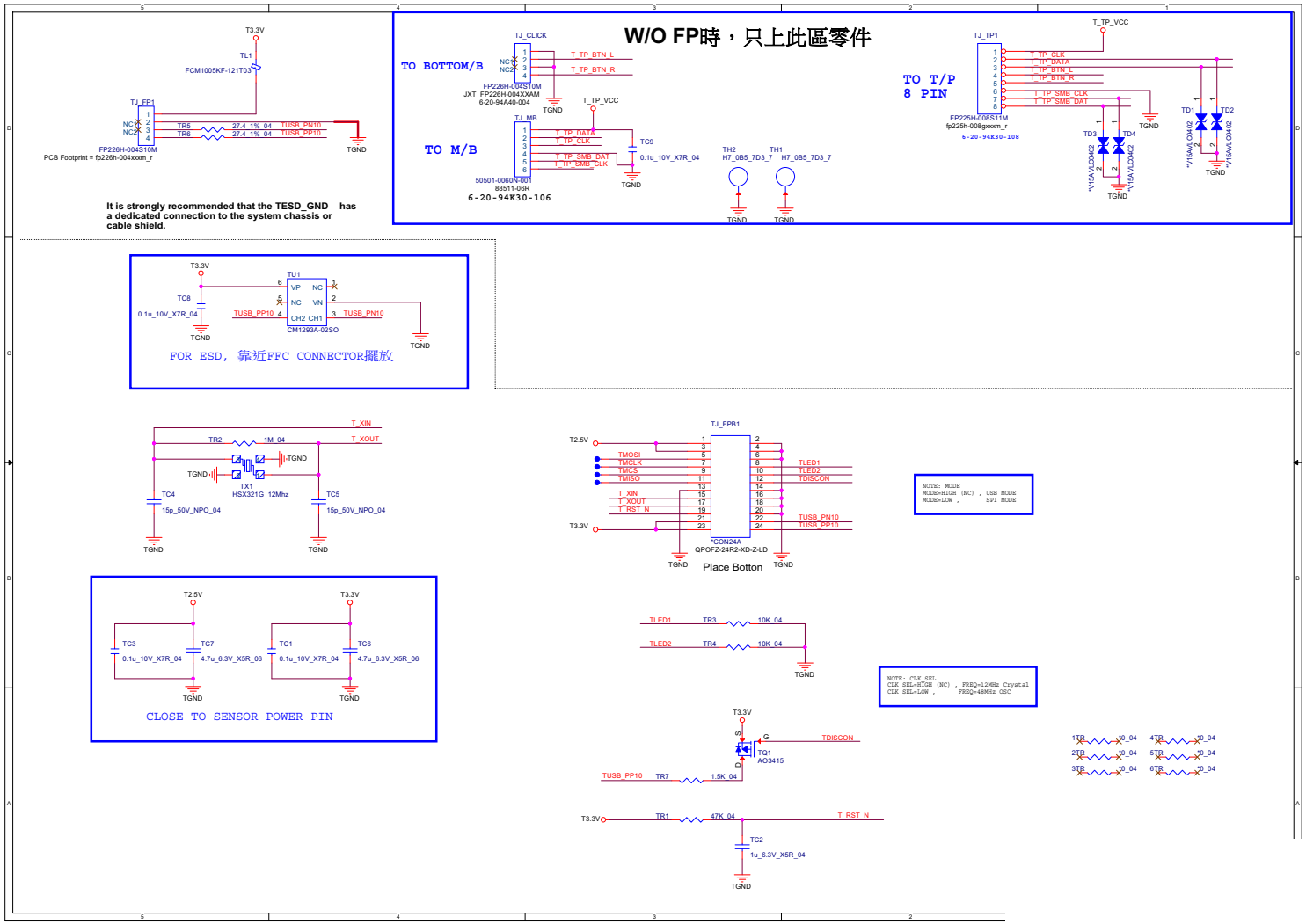


Sheet 78 of 81
Click Board

# Finger Sensor Board



**Sheet 79 of 81**
**Finger Sensor Board**

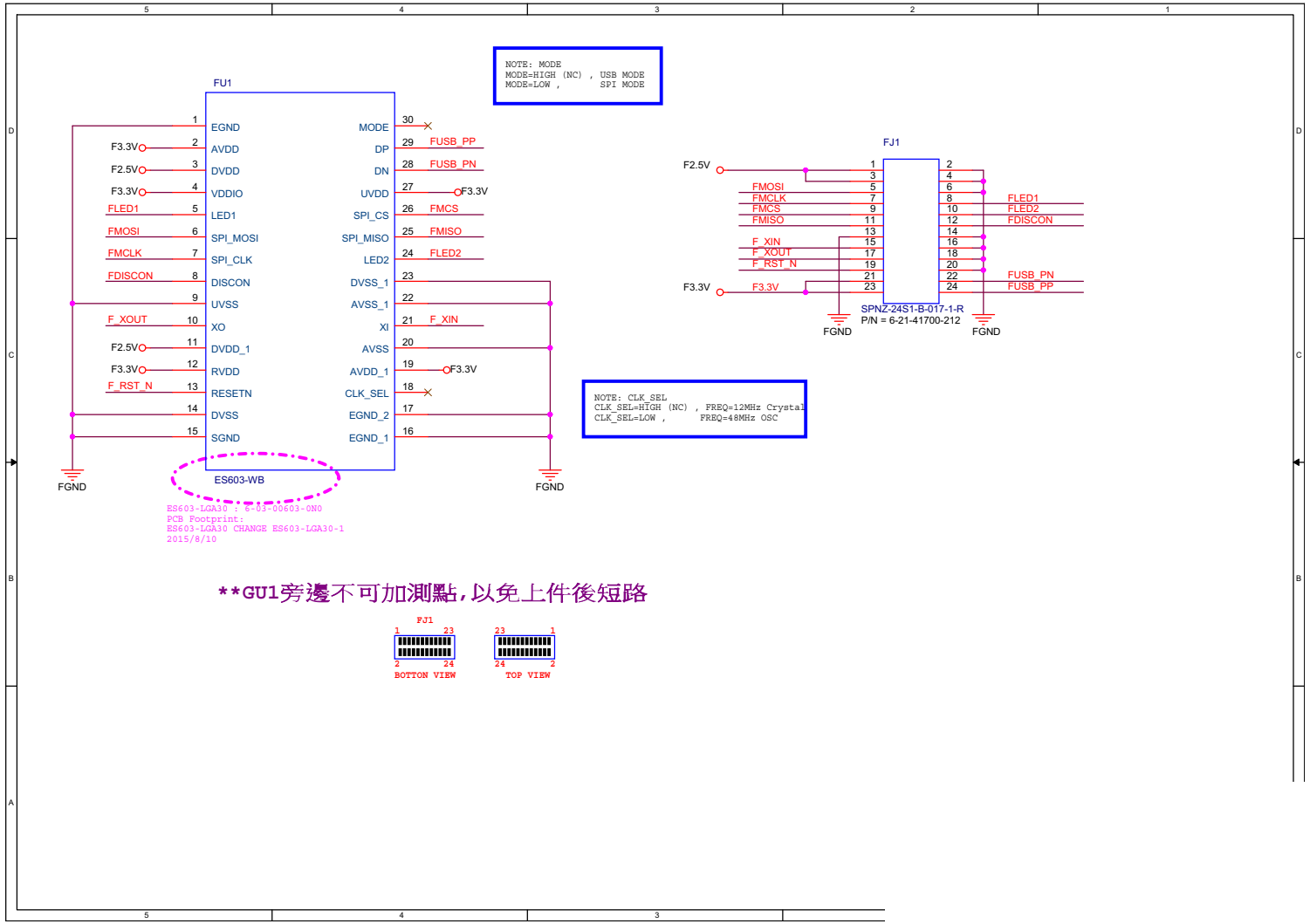

# Power Board

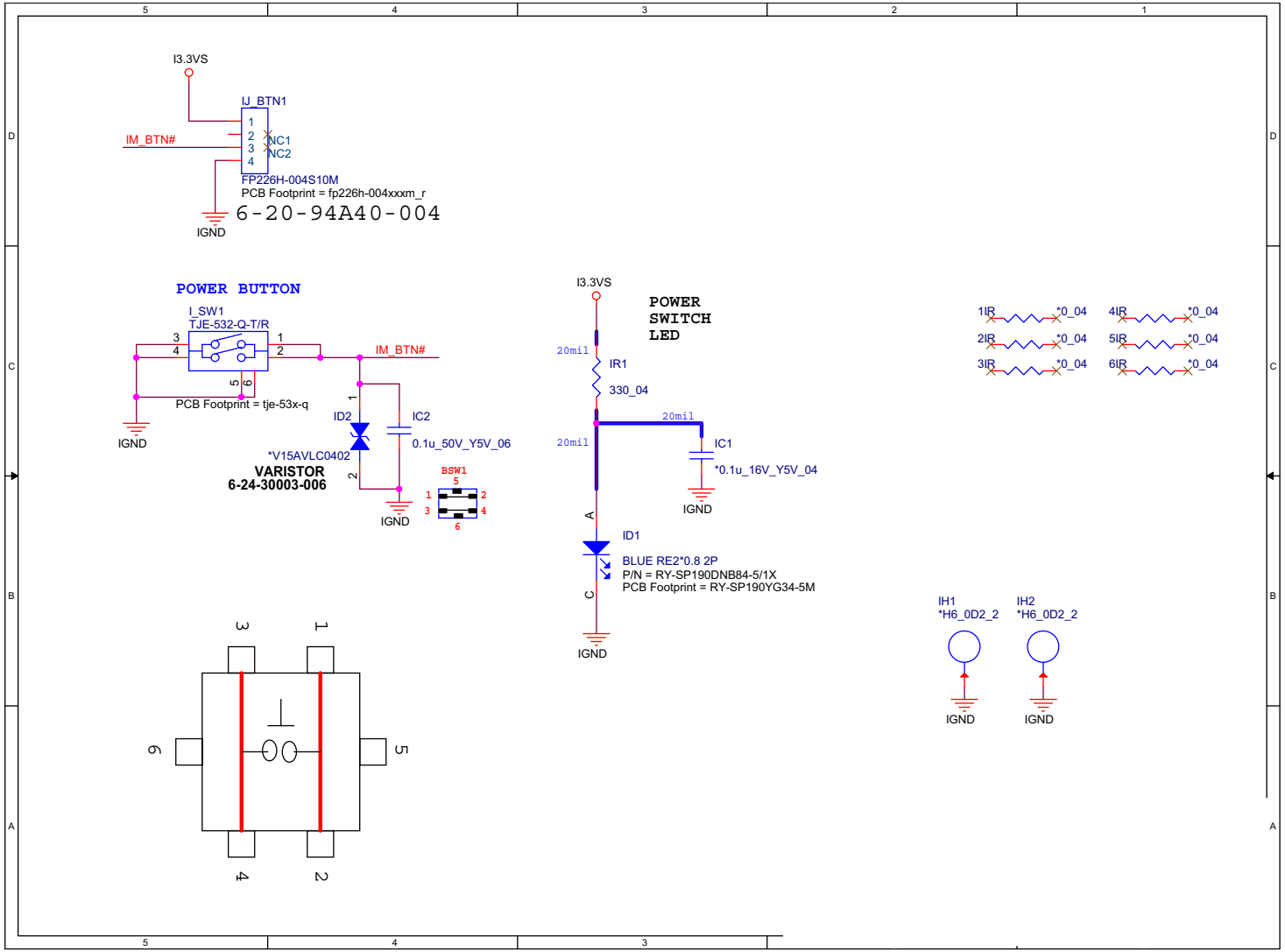


Sheet 80 of 81
Power Board

# LED Board



**Sheet 81 of 81**
**LED Board**

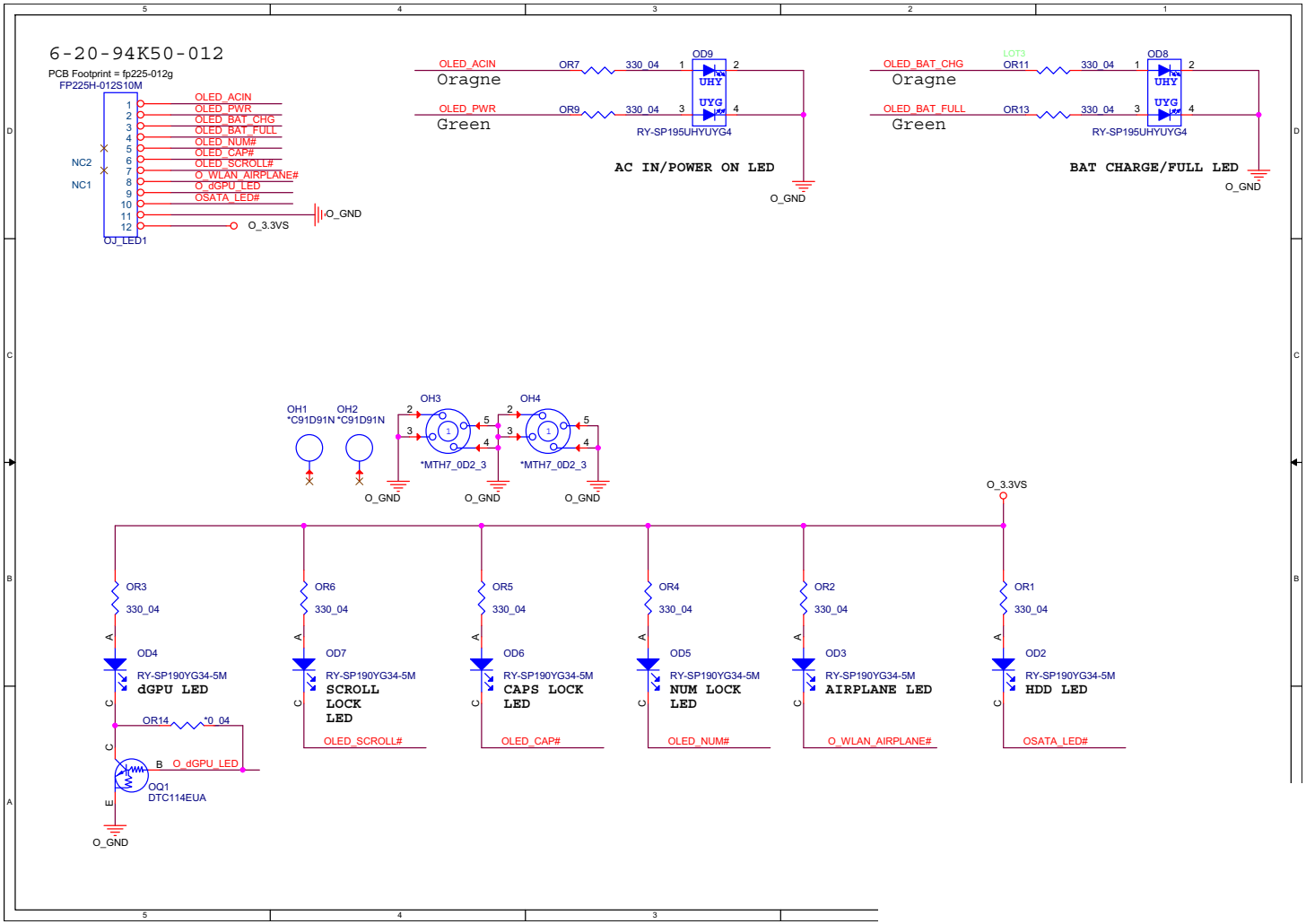

# Appendix C:pdating the FLASH ROM BIOS

## To update the FLASH ROM BIOS, you must:

- Download the BIOS update from the web site.
- Unzip the files onto a bootable CD/DVD/USB Flash Drive.
- Reboot your computer from an external CD/DVD/USB Flash Drive.
- Use the flash tools to update the flash BIOS using the commands indicated below.
- Restart the computer booting from the HDD and press **F2** at startup enter the BIOS.
- Load setup defaults from the BIOS and save the default settings and exit the BIOS to restart the computer.
- After rebooting the computer you may restart the computer again and make any required changes to the default BIOS settings.

### Download the BIOS

1. Go to **www.clevo.com.tw** and point to **E-Services** and click **E-Channel**.
2. Use your user ID and password to access the appropriate download area (BIOS), and download the latest BIOS files (the BIOS file will be contained in a batch file that may be run directly once unzipped) for your computer model (**see sidebar for important information on BIOS versions**).

### Unzip the downloaded files to a bootable CD/DVD or USB Flash drive

1. Insert a bootable CD/DVD/USB flash drive into the CD/DVD drive/USB port of the computer containing the downloaded files.
2. Use a tool such as Winzip or Winrar to unzip all the BIOS files and refresh tools to your bootable CD/DVD/USB flash drive (you may need to create a bootable CD/DVD with the files using a 3rd party software).

### Set the computer to boot from the external drive

1. With the bootable CD/DVD/USB flash drive containing the BIOS files in your CD/DVD drive/USB port, restart the computer and press **F2** (in most cases) to enter the BIOS.
2. Use the arrow keys to highlight the **Boot** menu.
3. Use the "+" and "-" keys to move boot devices up and down the priority order.
4. Make sure that the CD/DVD drive/USB flash drive is set first in the boot priority of the BIOS.
5. Press **F4** to save any changes you have made and exit the BIOS to restart the computer.

**BIOS Version**

Make sure you download the latest correct version of the BIOS appropriate for the computer model you are working on.

**You should only download BIOS versions that are V1.0X.XX or higher** as appropriate for your computer model.

Note that BIOS versions are not backward compatible and therefore **you may not downgrade your BIOS to an older version** after upgrading to a later version (e.g if you upgrade a BIOS to ver 1.01.05, you **MAY NOT** then go back and flash the BIOS to ver 1.01.04).

## Use the flash tools to update the BIOS

1. Make sure you are not loading any memory management programs such as HIMEM by holding the **F8** key as you see the message "**EFI Shell**". You will then be prompted to give "**Y**" or "**N**" responses to the programs being loaded by EFI Shell. Choose "N" for any memory management programs.
2. You should now see DISK **fsX**:\> (X is the designated drive number for the CD/DVD drive/USB flash drive).
3. **Type the following command**:

   **fsX:\> Flash.nsh**

4. The utility will then proceed to flash the BIOS.
5. You should then be prompted to press any key to restart the system or turn the power off, and then on again but make sure you remove the CD/DVD/USB flash drive from the CD/DVD drive/USB port before the computer restarts.

## Restart the computer (booting from the HDD)

1. With the CD/DVD/USB flash drive removed from the CD/DVD drive/USB port the computer should restart from the HDD.
2. Press **F2** as the computer restarts to enter the BIOS.
3. Use the arrow keys to highlight the **Exit** menu.
4. Select **Load Setup Defaults** (or press **F3**) and select "**Yes**" to confirm the selection.
5. Press **F4** to save any changes you have made and exit the BIOS to restart the computer.

## Your computer is now running normally with the updated BIOS

You may now enter the BIOS and make any changes you require to the default settings.