SERVICE MANUAL

P955ET1 / P955ET3

notebook

Notebook Computer

P955ET1 / P955ET3

Service Manual

Notice

The company reserves the right to revise this publication or to change its contents without notice. Information contained herein is for reference only and does not constitute a commitment on the part of the manufacturer or any subsequent vendor. They assume no responsibility or liability for any errors or inaccuracies that may appear in this publication nor are they in anyway responsible for any loss or damage resulting from the use (or misuse) of this publication.

This publication and any accompanying software may not, in whole or in part, be reproduced, translated, transmitted or reduced to any machine readable form without prior consent from the vendor, manufacturer or creators of this publication, except for copies kept by the user for backup purposes.

Brand and product names mentioned in this publication may or may not be copyrights and/or registered trademarks of their respective companies. They are mentioned for identification purposes only and are not intended as an endorsement of that product or its manufacturer.

Version 1.0
October 2018

Trademarks

Intel and Intel Core are trademarks of Intel Corporation.
Windows® is a registered trademark of Microsoft Corporation.
Other brand and product names are trademarks and /or registered trademarks of their respective companies.

HDMI™
HIGH-DEFINITION MULTIMEDIA INTERFACE

About this Manual

This manual is intended for service personnel who have completed sufficient training to undertake the maintenance and inspection of personal computers.

It is organized to allow you to look up basic information for servicing and/or upgrading components of the ***P955ET1 / P955ET3*** series notebook PC.

The following information is included:

Chapter 1, Introduction, provides general information about the location of system elements and their specifications.
Chapter 2, Disassembly, provides step-by-step instructions for disassembling parts and subsystems and how to upgrade elements of the system.

Appendix A, Part Lists
Appendix B, Schematic Diagrams
Appendix C, Updating the FLASH ROM BIOS

IMPORTANT SAFETY INSTRUCTIONS

Follow basic safety precautions, including those listed below, to reduce the risk of fire, electric shock and injury to persons when using any electrical equipment:

1. Do not use this product near water, for example near a bath tub, wash bowl, kitchen sink or laundry tub, in a wet basement or near a swimming pool.
2. Avoid using a telephone (other than a cordless type) during an electrical storm. There may be a remote risk of electrical shock from lightning.
3. Do not use the telephone to report a gas leak in the vicinity of the leak.
4. Use only the power cord and batteries indicated in this manual. Do not dispose of batteries in a fire. They may explode. Check with local codes for possible special disposal instructions.
5. This product is intended to be supplied by a Listed Power Unit as follows:

- AC Input of 100 - 240V, 50 - 60Hz, DC Output of 19V, 7.89A or 19.5, 7.7A (**150** Watts) minimum AC/DC Adapter.

FCC Statement

This device complies with Part 15 of the FCC Rules. Operation is subject to the following two conditions:
This device may not cause harmful interference.
This device must accept any interference received, including interference that may cause undesired operation.

Instructions for Care and Operation

The notebook computer is quite rugged, but it can be damaged. To prevent this, follow these suggestions:

1. **Don't drop it, or expose it to shock.** If the computer falls, the case and the components could be damaged.

Do not expose the computer to any shock or vibration. 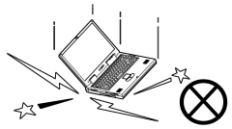	*Do not place it on an unstable surface.* 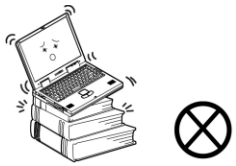	*Do not place anything heavy on the computer.* 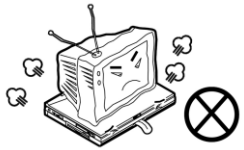

2. **Keep it dry, and don't overheat it.** Keep the computer and power supply away from any kind of heating element. This is an electrical appliance. If water or any other liquid gets into it, the computer could be badly damaged.

Do not expose it to excessive heat or direct sunlight.	*Do not leave it in a place where foreign matter or moisture may affect the system.*	*Don't use or store the computer in a humid environment.* 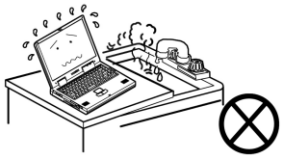	*Do not place the computer on any surface which will block the vents.* 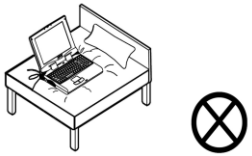

3. **Follow the proper working procedures for the computer**. Shut the computer down properly and don't forget to save your work. Remember to periodically save your data as data may be lost if the battery is depleted.

Do not turn off the power until you properly shut down all programs. 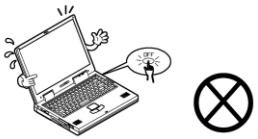	*Do not turn off any peripheral devices when the computer is on.* 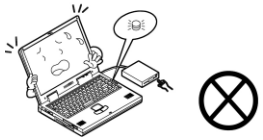	*Do not disassemble the computer by yourself.*	*Perform routine maintenance on your computer.*

4. **Avoid interference.** Keep the computer away from high capacity transformers, electric motors, and other strong magnetic fields. These can hinder proper performance and damage your data.
5. **Take care when using peripheral devices**.

Use only approved brands of peripherals. 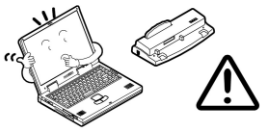	*Unplug the power cord before attaching peripheral devices.* 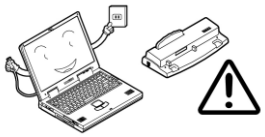

Power Safety

The computer has specific power requirements:

- Only use a power adapter approved for use with this computer.
- Your AC adapter may be designed for international travel but it still requires a steady, uninterrupted power supply. If you are unsure of your local power specifications, consult your service representative or local power company.
- The power adapter may have either a 2-prong or a 3-prong grounded plug. The third prong is an important safety feature; do not defeat its purpose. If you do not have access to a compatible outlet, have a qualified electrician install one.
- When you want to unplug the power cord, be sure to disconnect it by the plug head, not by its wire.
- Make sure the socket and any extension cord(s) you use can support the total current load of all the connected devices.
- Before cleaning the computer, make sure it is disconnected from any external power supplies.

Power Safety Warning

Before you undertake any upgrade procedures, make sure that you have turned off the power, and disconnected all peripherals and cables (including telephone lines and power cord). It is advisable to also remove your battery in order to prevent accidentally turning the machine on.

Do not plug in the power cord if you are wet.	*Do not use the power cord if it is broken.* 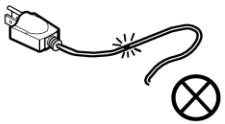	*Do not place heavy objects on the power cord.* 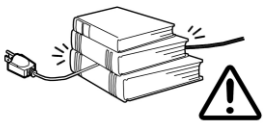

Battery Precautions

- Only use batteries designed for this computer. The wrong battery type may explode, leak or damage the computer.
- Do not continue to use a battery that has been dropped, or that appears damaged (e.g. bent or twisted) in any way. Even if the computer continues to work with a damaged battery in place, it may cause circuit damage, which may possibly result in fire.
- Recharge the batteries using the notebook's system. Incorrect recharging may make the battery explode.
- Do not try to repair a battery pack. Refer any battery pack repair or replacement to your service representative or qualified service personnel.
- Keep children away from, and promptly dispose of a damaged battery. Always dispose of batteries carefully. Batteries may explode or leak if exposed to fire, or improperly handled or discarded.
- Keep the battery away from metal appliances.
- Affix tape to the battery contacts before disposing of the battery.
- Do not touch the battery contacts with your hands or metal objects.

Battery Guidelines

The following can also apply to any backup batteries you may have.

- If you do not use the battery for an extended period, then remove the battery from the computer for storage.
- Before removing the battery for storage charge it to 60% - 70%.
- Check stored batteries at least every 3 months and charge them to 60% - 70%.

Battery Disposal

The product that you have purchased contains a rechargeable battery. The battery is recyclable. At the end of its useful life, under various state and local laws, it may be illegal to dispose of this battery into the municipal waste stream. Check with your local solid waste officials for details in your area for recycling options or proper disposal.

Caution

Danger of explosion if battery is incorrectly replaced. Replace only with the same or equivalent type recommended by the manufacturer. Discard used battery according to the manufacturer's instructions.

Battery Level

Click the battery icon in the taskbar to see the current battery level and charge status. A battery that drops below a level of 10% will not allow the computer to boot up. Make sure that any battery that drops below 10% is recharged within one week.

Related Documents

You may also need to consult the following manual for additional information:

User's Manual on CD/DVD

This describes the notebook PC's features and the procedures for operating the computer and its ROM-based setup program. It also describes the installation and operation of the utility programs provided with the notebook PC.

System Startup

1. Remove all packing materials.
2. Place the computer on a stable surface.
3. Insert the battery and make sure it is locked in position.
4. Securely attach any peripherals you want to use with the computer (e.g. keyboard and mouse) to their ports.
5. **When first setting up the computer use the following procedure** (as to safeguard the computer during shipping, the battery will be locked to not power the system until first connected to the AC/DC adapter and initially set up as below):
   - Attach the AC/DC adapter cord to the DC-In jack at the rear of the computer, then plug the AC power cord into an outlet, and connect the AC power cord to the AC/DC adapter and **leave it there for 6 seconds or longer**.
   - Remove the adapter cord from the computer's DC-In jack, and then plug it back in again; the battery will now be unlocked.
6. Use one hand to raise the lid/LCD to a comfortable viewing angle (do not exceed 130 degrees); use the other hand (as illustrated in Figure 1) to support the base of the computer (**Note**: **Never** lift the computer by the lid/LCD).
7. Press the power button to turn the computer "on".

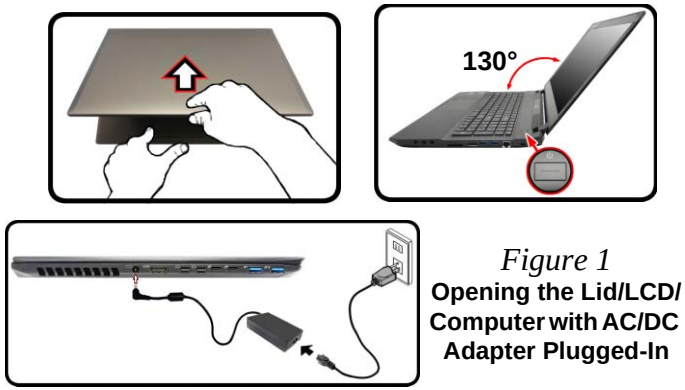

Figure 1
Opening the Lid/LCD/ Computer with AC/DC Adapter Plugged-In

Shut Down

Note that you should always shut your computer down by choosing the **Shut down** command in ***Windows*** (see below). This will help prevent hard disk or system problems.

Click the icon in the **Start Screen** and choose **Shut down** from the menu.

Or

Right-click the **Start button** at the bottom of the **Start Screen** or the **Desktop** and choose **Shut down or sign out > Shut down** from the context menu.

Contents

Introduction 1-1

Overview 1-1
Specifications 1-2
External Locator - Top View with LCD Panel Open 1-4
External Locator - Front & Right Side Views 1-5
External Locator - Left Side & Rear View 1-6
External Locator - Bottom View 1-7
Mainboard Overview - Top (Key Parts) 1-8
Mainboard Overview - Bottom (Key Parts) 1-9
Mainboard Overview - Top (Connectors) 1-10
Mainboard Overview - Bottom (Connectors) 1-11

Disassembly 2-1

Overview 2-1
Maintenance Tools 2-2
Connections 2-2
Maintenance Precautions 2-3
Disassembly Steps 2-4
Removing the Keyboard 2-5
Removing the Battery 2-6
Removing the Hard Disk Drive 2-8
Removing the System Memory (RAM) 2-10
Removing the M.2 SSD Module 2-11
Removing the Wireless LAN Module 2-12
Wireless LAN, Combo, & LTE Module Cables 2-13
Removing the 4G Module 2-14
Removing the CCD 2-15

Part Lists A-1

Part List Illustration Location A-2
Top A-3
Bottom A-4
Main Board A-5
HDD A-6
LCD A-7

Schematic Diagrams.....B-1

System Block Diagram B-2
Processor 1/7 .....B-3
Processor 2/7 .....B-4
Processor 3/7 .....B-5
Processor 4/7 .....B-6
Processor 5/7 .....B-7
Processor 6/7 .....B-8
Processor 7/7 .....B-9
DDR4 CHA SO-DIMM_0 .....B-10
DDR4 CHB SO-DIMM_0 .....B-11
Panel, Inverter B-12
Mini DP Port B-13
HDMI Connector B-14
VGA PCI Express B-15
GPU Frame Buffer Partition B-16
Frame Buffer Partition A B-17
Frame Buffer Partition B B-18
Frame Buffer Partition A_B B-19
GPU Frame Buffer Partition B-20
Frame Buffer Partition C B-21
Frame Buffer Partition D B-22
Frame Buffer Partition C_D B-23
GPU Decoupling 1 .....B-24
GPU Decoupling 2 .....B-25
Straps and XTAL B-26

IFP I/O Interface B-27
Misc - GPIO, I2C and ROM B-28
GPU NVVDD, FBVDDQ B-29
GPU GND & Sequence B-30
PCH 1/9 ..... B-31
PCH 2/9 ..... B-32
PCH 3/9 ..... B-33
PCH 4/9 ..... B-34
PCH 5/9 ..... B-35
PCH 6/9 ..... B-36
PCH 7/9 ..... B-37
PCH 8/9 ..... B-38
PCH 9/9 ..... B-39
KBC IT8587 ..... B-40
Backlight KB B-41
Realtek ALC1220 ..... B-42
Smart AMP ALC1306 ..... B-43
ASM1562 1/3 ..... B-44
ASM1543 2/3 ..... B-45
ASM1543 3/3 ..... B-46
TPM, TP B-47
Connector B-48
MFan, LID, LED B-49
M.2 WLAN+BT, PCIE4X SSD B-50
M.2 3G/LTE, SIM B-51
5V, 5VS, 3.3V, 3.3VS B-52
VDD3, VDD5 ..... B-53
1V8_RUN/AON, 3.3VA B-54
1.8VA/1.05V_XX, NV3V3 ..... B-55
PEX_VDD B-56
1.05VA, VCCIO B-57
DDR 1.2V, 0.6VS B-58
VCore & VCCGT & VCCSA B-59
VCore Output B-60
VCCGT, VCCSA Output B-61
VNVVDD 1 ..... B-62
NVVDD 2 ..... B-63
FBVDDQ B-64
AC_In, Charger B-65
LED Board B-66
Click Board B-67
Reader Board B-68
USB Board B-69
LAN Board B-70
Power Board B-71
Power Sequence B-72
USB Board, Receiver B-73

Updating the FLASH ROM BIOS..... C-1

Download the BIOS C-1
Unzip the downloaded files to a bootable CD/DVD or USB Flash drive C-1
Set the computer to boot from the external drive C-1
Use the flash tools to update the BIOS C-2
Restart the computer (booting from the HDD) C-2

Chapter 1: Introduction

Overview

This manual covers the information you need to service or upgrade the ***P955ET1 / P955ET3*** series notebook computer. Information about operating the computer (e.g. getting started, and the *Setup* utility) is in the *User's Manual*. Information about dri-vers (e.g. VGA & audio) is also found in the *User's Manual*. The manual is shipped with the computer.

Operating systems (e.g. *Windows 10*, etc.) have their own manuals as do application softwares (e.g. word processing and database programs). If you have questions about those programs, you should consult those manuals.

The ***P955ET1 / P955ET3*** series notebook is designed to be upgradeable. See ***Disassembly on page 2 - 1*** for a detailed description of the upgrade procedures for each specific component. Please take note of the warning and safety information indicated by the "🔔" symbol.

The balance of this chapter reviews the computer's technical specifications and features.

Specifications

Latest Specification Information

The specifications listed here are correct at the time of sending them to the press. Certain items (particularly processor types/speeds) may be changed, delayed or updated due to the manufacturer's release schedule. Check with your service center for more details.

CPU Speed & Computer in DC Mode

Note that when the computer is in DC mode (powered by the battery only) the CPU may not run at full speed. This is a design feature implemented in order to protect the battery.

Processor Options

i7-8750H (2.20GHz)

9MB Smart Cache, **14nm**, DDR4-2666MHz, TDP 45W

Core Logic

Intel® HM370 Express Chipset

LCD Options

15.6" (39.62cm), 16:9, UHD (3840x2160)/FHD (1920x1080)

BIOS

128Mb SPI Flash ROM

INSYDE BIOS

Memory

Dual Channel DDR4

Two 260 Pin SO-DIMM Sockets (Supporting **DDR4 2400MHz** or **DDR4 2666MHz** (Depending on CPU Type) Memory Modules)

Memory Expandable from **8GB** (**minimum**) up to **32GB** (**maximum**)

Compatible with 4GB, 8GB,16GB or 64GB Modules

Security

Security (Kensington® Type) Lock Slot

BIOS Password

Intel PTT for Systems Without TPM Hardware

(**Factory Option**) TPM 2.0

(**Factory Option**) Fingerprint Reader Module

Video Adapter Options

Microsoft Hybrid Graphics Mode

Supports up to 4 Active Displays

Supports NVIDIA Surround View via HDMI x 1 and MiniDP x2

Intel Integrated GPU

Intel® UHD Graphics 630

Dynamic Frequency

Intel Dynamic Video Memory Technology

Microsoft DirectX®12 Compatible

NVIDIA® Discrete GPU

NVIDIA® Quadro P4200 with Max-Q Design

8GB GDDR5 Video RAM

NVDIDIA PhysX

Microsoft DirectX®12 Compatible

Pointing Device

(**Factory Option**) Built-In Secure Pad (with Microsoft PTP Multi Gesture & Scrolling Functionality)

Or

(**Factory Option**) Built-in Touchpad ((with Microsoft PTP Multi Gesture & Scrolling Functionality)

Keyboard

Full-size **White-LED Illuminated** Keyboard (with numeric keypad)

Or

(**Factory Option**) **Full Color Illuminated** Full-size Keyboard (with numeric keypad)

Storage

One changeable 2.5" (6cm) **7.0mm (h) SATA** (Serial) Hard Disk Drive/Solid State Drive (SSD)

(**Factory Option**) **One** M.2 2280 **SATA/PCIe Gen3 x4** Solid State Drive (SSD)

Audio

High Definition Audio Compliant Interface
S/PDIF Digital Output
Sound Blaster® Cinema 5
Built-In Array Microphone
Two Speakers

Communication

Built-In 10/100/1000Mb Base-TX Ethernet LAN
2.0M FHD PC Camera Module
(**Factory Option**) M.2 3042 **4G** Module

WLAN/ Bluetooth M.2 Modules:

(**Factory Option**) Intel® Dual Band Wireless-AC 9260 Wireless LAN (**802.11ac**) + Bluetooth
(**Factory Option**) Intel® Dual Band Wireless-AC 9560 Wireless LAN (**802.11ac**) + Bluetooth
(**Factory Option**) Intel® Dual Band Wireless-AC 9462 Wireless LAN (**802.11ac**) + Bluetooth
(**Factory Option**) Qualcomm® Atheros Killer™ Wireless-AC 1550i Wireless LAN (**802.11ac**) + Bluetooth

Card Reader

Embedded Multi-In-1 Push-Push Card Reader
MMC (MultiMedia Card)/RS MMC
SD (Secure Digital)/Mini SD/SDHC/ SDXC (up to UHS-II)

M.2 Slots

Slot 1 for **Combo WLAN and Bluetooth** Module
Slot 2 for **SATA** or **PCIe Gen3 x4 SSD**

Interface

Three USB 3.0 (USB 3.1 Gen 1) Type-A Ports (Including one AC/DC Powered USB Port)
Two USB 3.1 Gen 2 Type-C Ports*
**The maximum amount of current supplied by USB Type-C ports is 500mA (USB 2.0)/900mA (USB 3.1).*

Two Mini DisplayPorts (1.3)
One HDMI-Out Port
One 2-In-1 Audio Jack (Headphone & S/PDIF (Optical) Out Combo Jack)
One Microphone-In Jack
One RJ-45 LAN Jack
One DC-In Jack

USB 3.1 Gen 2

Note that when a single USB device is plugged in to a USB 3.1 Gen 2 port the data transfer speed will be 10Gbps, however when two devices are plugged in to both USB 3.1 Gen 2 ports, this bandwidth will be shared between the ports.

Features

Intel® Optane™ Technology (for Intel Core processor family)
Virtual Reality Ready
Supports Windows® 10 Cortana with Voice
Windows® Mixed Reality Compatible
(**Factory Option**) USB Drive

Environmental Spec

Temperature
Operating: 5°C - 35°C
Non-Operating: -20°C - 60°C
Relative Humidity
Operating: 20% - 80%
Non-Operating: 10% - 90%

Power

Embedded 4-Cell Polymer Battery Pack, 55WH

Full Range AC/DC Adapter
AC Input: 100 - 240V, 50 - 60Hz
DC Output: 19V, 7.89A or 19.5V, 7.7A (**150W**)

CPU Speed & Computer in DC Mode

Note that when the computer is in DC mode (powered by the battery only) the CPU may not run at full speed. This is a design feature implemented in order to protect the battery.

Dimensions & Weight

380mm (w) * 255mm (d) * 18.6mm (h)
1.98g (Barebone with 55WH Battery)

External Locator - Top View with LCD Panel Open

Figure 1
Top View

1. PC Camera
2. *PC Camera LED
   **When the PC camera is in use, the LED will be illuminated.*
3. Built-In Array Microphone
4. LCD
5. Speakers
6. Power Button
7. Keyboard
8. Touchpad & Buttons
9. Fingerprint Reader (**Optional**)

External Locator - Front & Right Side Views

FRONT VIEW

Figure 2
Front View

1. LED Indicator

RIGHT SIDE VIEW

Figure 3
Right Side View

1. Microphone-In Jack
2. Headphone & S/PDIF Combo Jack
3. USB 3.0 (USB 3.1 Gen 1) Ports
4. Multi-in-1 Card Reader
5. USIM Card Reader (for 3G/4G USIM Cards)
6. RJ-45 LAN Jack

External Locator - Left Side & Rear View

Figure 4
Left Side View

1. Security Lock Slot
2. Vent
3. DC-In Jack
4. HDMI-Out Port
5. Mini DisplayPorts
6. USB 3.1 Gen 2 Type-C Ports
7. USB 3.0 (USB 3.1 Gen 1) Ports
8. Powered USB 3.0 Port

LEFT SIDE VIEW

Figure 5
Rear View

1. Vent

REAR VIEW

External Locator - Bottom View

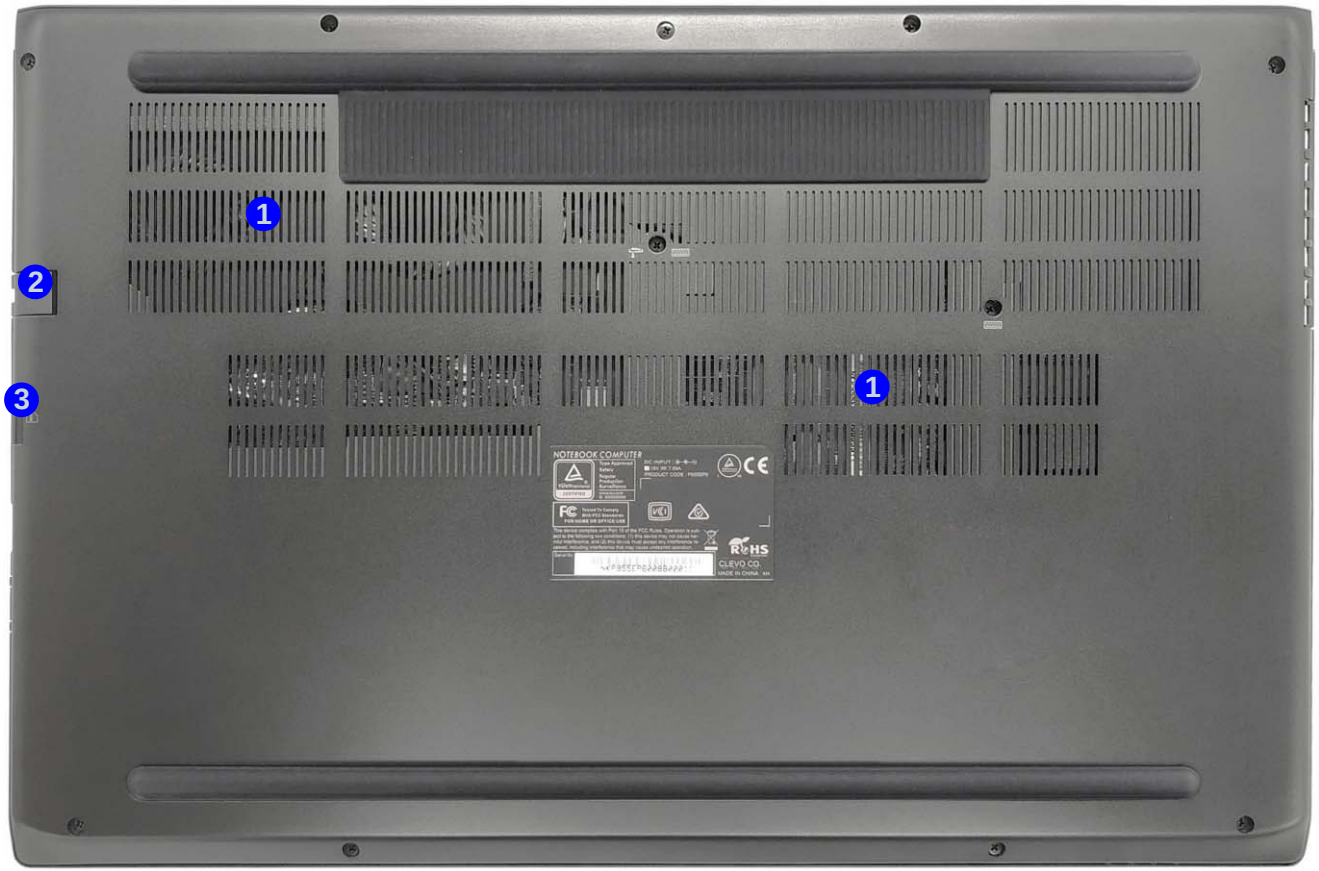

Figure 6
Bottom View

1. Vent
2. RJ-45 LAN Jack
3. USIM Card Reader (for 3G/ 4G USIM Cards)

Overheating

To prevent your computer from overheating, make sure nothing blocks any vent while the computer is in use.

Figure 7
Mainboard Top Key Parts

Mainboard Overview - Top (Key Parts)

1. KBC-ITE IT8587

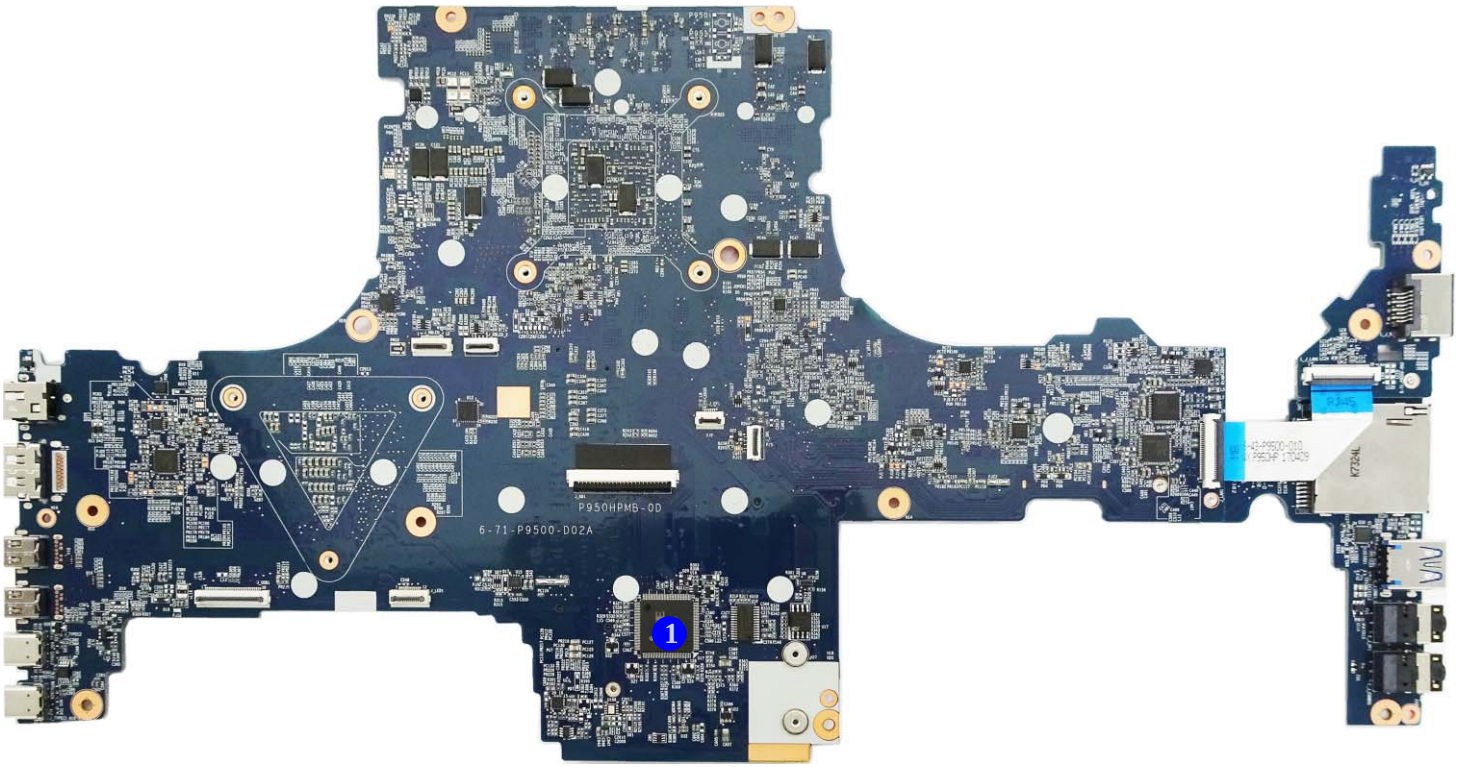

Mainboard Overview - Bottom (Key Parts)

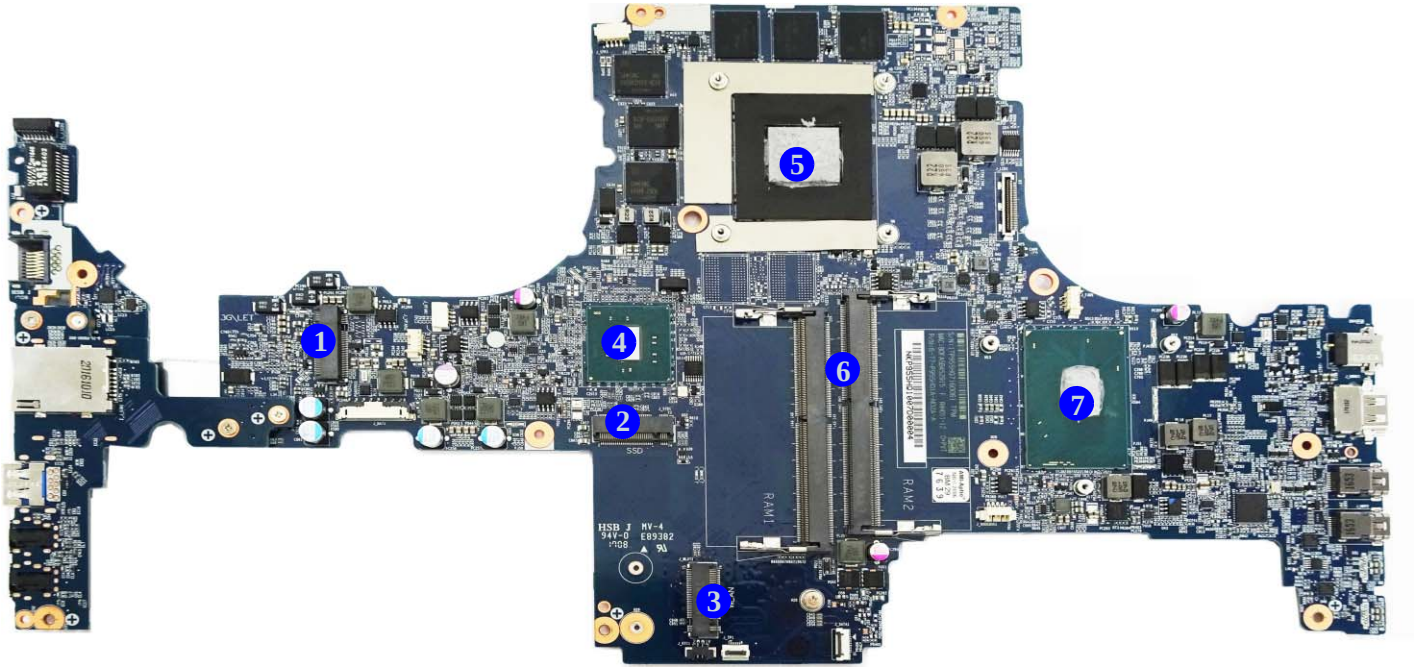

Figure 8
Mainboard Bottom Key Parts

1. Mini-Card Connector (M.2 3G/SATA Module)
2. Mini-Card Connector (M.2 PCIE/SATA SSD Module)
3. Mini-Card Connector (WLAN Module)
4. PCH
5. GPU-GTX1060M
6. Memory Slots DDR4 SO-DIMM
7. CPU

Mainboard Overview - Top (Connectors)

Figure 9
Mainboard Top Connectors

1. DC-In Jack
2. HDMI Port
3. Mini Display Ports
4. USB 3.1 Gen 2 Type-C Ports
5. TP Connector
6. Keyboard Cable Connector
7. Microphone-In Jack
8. Headphone & S/PDIF Combo Jack
9. USB 3.0 (USB 3.1 Gen 1) Port
10. Multi-in-1 Card Reader
11. RJ-45 LAN Jack

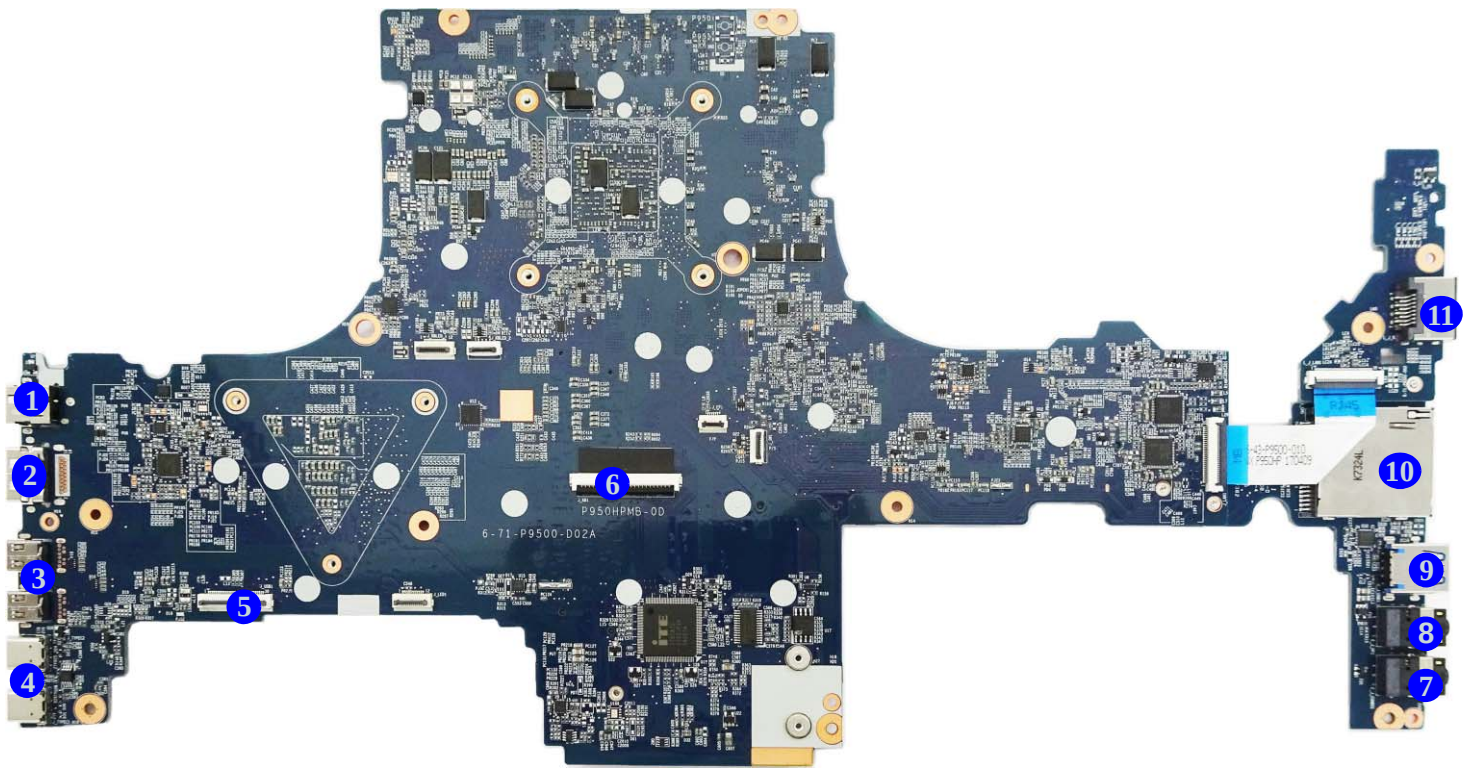

Mainboard Overview - Bottom (Connectors)

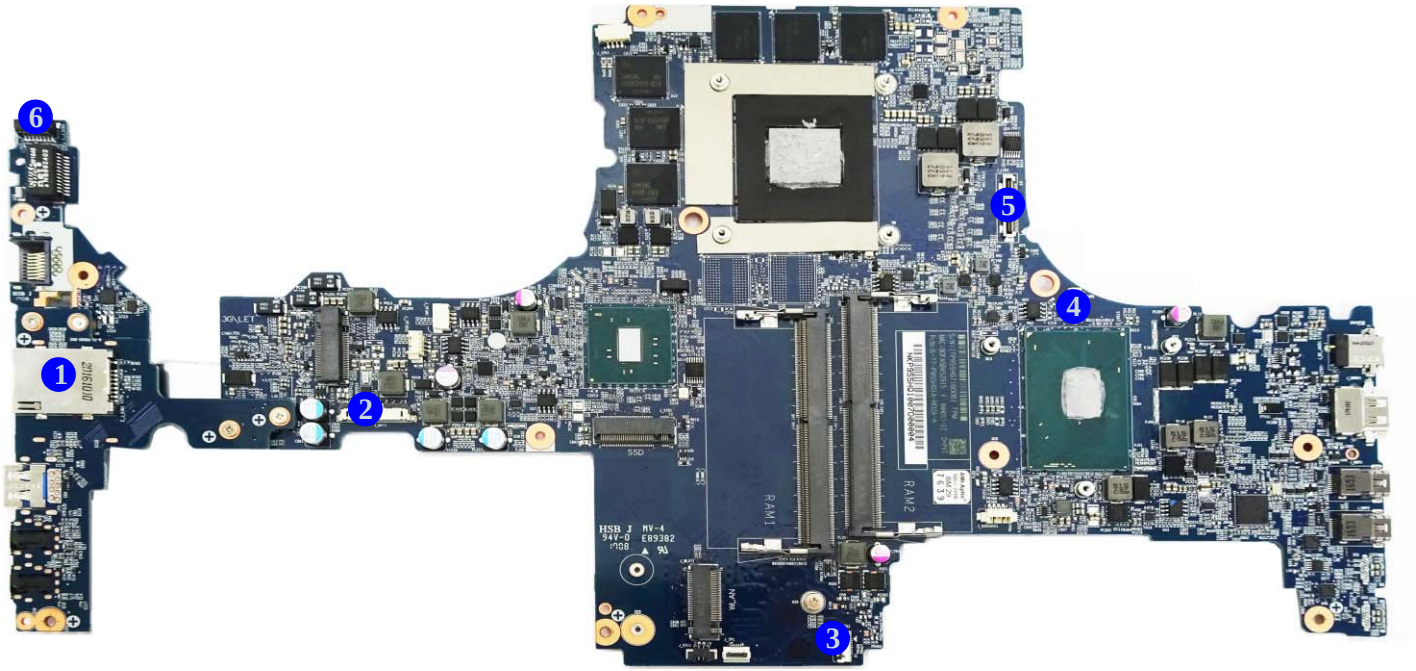

Figure 10
Mainboard Bottom Connectors

1. USIM Card Reader (for 3G/4G USIM Cards)
2. Battery Connector
3. HDD Connector
4. Fan Connector
5. LCD Cable Connector
6. CCD Connector

Chapter 2: Disassembly

Overview

This chapter provides step-by-step instructions for disassembling the ***P955ET1 / P955ET3*** series notebook's parts and subsystems. When it comes to reassembly, reverse the procedures (unless otherwise indicated).

We suggest you completely review any procedure before you take the computer apart.

Procedures such as upgrading/replacing the RAM, optical device and hard disk are included in the User's Manual but are repeated here for your convenience.

To make the disassembly process easier each section may have a box in the page margin. Information contained under the figure # will give a synopsis of the sequence of procedures involved in the disassembly procedure. A box with a lists the relevant parts you will have after the disassembly process is complete. **Note**: The parts listed will be for the disassembly procedure listed ONLY, and not any previous disassembly step(s) required. Refer to the part list for the previous disassembly procedure. The amount of screws you should be left with will be listed here also.

A box with a will also provide any possible helpful information. A box with a contains warnings.

An example of these types of boxes are shown in the sidebar.

Information

Warning

NOTE: All disassembly procedures assume that the system is turned **OFF**, and disconnected from any power supply (the battery is removed too).

Maintenance Tools

The following tools are recommended when working on the notebook PC:

- M3 Philips-head screwdriver
- M2.5 Philips-head screwdriver (magnetized)
- M2 Philips-head screwdriver
- Small flat-head screwdriver
- Pair of needle-nose pliers
- Anti-static wrist-strap

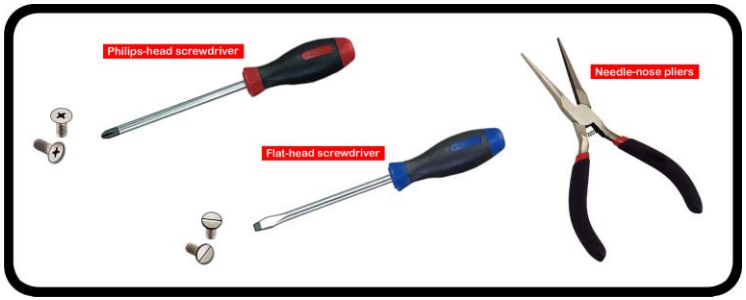

Connections

Connections within the computer are one of four types:

Locking collar sockets for ribbon connectors	To release these connectors, use a small flat-head screwdriver to gently pry the locking collar away from its base. When replacing the connection, make sure the connector is oriented in the same way. The pin1 side is usually not indicated.
Pressure sockets for multi-wire connectors	To release this connector type, grasp it at its head and gently rock it from side to side as you pull it out. Do not pull on the wires themselves. When replacing the connection, do not try to force it. The socket only fits one way.
Pressure sockets for ribbon connectors	To release these connectors, use a small pair of needle-nose pliers to gently lift the connector away from its socket. When replacing the connection, make sure the connector is oriented in the same way. The pin1 side is usually not indicated.
Board-to-board or multi-pin sockets	To separate the boards, gently rock them from side to side as you pull them apart. If the connection is very tight, use a small flat-head screwdriver - use just enough force to start.

Maintenance Precautions

The following precautions are a reminder. To avoid personal injury or damage to the computer while performing a removal and/or replacement job, take the following precautions:

1. **Don't drop it**. Perform your repairs and/or upgrades on a stable surface. If the computer falls, the case and other components could be damaged.
2. **Don't overheat it**. Note the proximity of any heating elements. Keep the computer out of direct sunlight.
3. **Avoid interference**. Note the proximity of any high capacity transformers, electric motors, and other strong magnetic fields. These can hinder proper performance and damage components and/or data. You should also monitor the position of magnetized tools (i.e. screwdrivers).
4. **Keep it dry**. This is an electrical appliance. If water or any other liquid gets into it, the computer could be badly damaged.
5. **Be careful with power**. Avoid accidental shocks, discharges or explosions.
   •Before removing or servicing any part from the computer, turn the computer off and detach any power supplies.
   •When you want to unplug the power cord or any cable/wire, be sure to disconnect it by the plug head. Do not pull on the wire.
6. **Peripherals** – Turn off and detach any peripherals.
7. **Beware of static discharge**. ICs, such as the CPU and main support chips, are vulnerable to static electricity. Before handling any part in the computer, discharge any static electricity inside the computer. When handling a printed circuit board, do not use gloves or other materials which allow static electricity buildup. We suggest that you use an anti-static wrist strap instead.
8. **Beware of corrosion**. As you perform your job, avoid touching any connector leads. Even the cleanest hands produce oils which can attract corrosive elements.
9. **Keep your work environment clean**. Tobacco smoke, dust or other air-born particulate matter is often attracted to charged surfaces, reducing performance.
10. **Keep track of the components**. When removing or replacing any part, be careful not to leave small parts, such as screws, loose inside the computer.

Power Safety Warning

Before you undertake any upgrade procedures, make sure that you have turned off the power, and disconnected all peripherals and cables (including telephone lines and power cord). It is advisable to also remove your battery in order to prevent accidentally turning the machine on.

Cleaning

Do not apply cleaner directly to the computer, use a soft clean cloth.
Do not use volatile (petroleum distillates) or abrasive cleaners on any part of the computer.
(For Computer Models Supplied with Light Blue Cleaning Cloth) Some computer models in this series come supplied with a light blue cleaning cloth. To clean the computer case with this cloth follow the instructions below.

- Power off the computer and peripherals.
- Disconnect the AC/DC adapter from the computer.
- Use a little water to dampen the cloth slightly.
- Clean the computer case with the cloth.
- Dry the computer with a dry cloth, or allow it time to dry before turning on.
- Reconnect the AC/DC adapter and turn the computer on.

Disassembly Steps

The following table lists the disassembly steps, and on which page to find the related information. **PLEASE PERFORM THE DISASSEMBLY STEPS IN THE ORDER INDICATED.**

To remove the Keyboard:

1. Remove the keyboard *page 2 - 5*

To remove the Battery:

1. Remove the keyboard *page 2 - 5*
2. Remove the battery *page 2 - 6*

To remove the HDD:

1. Remove the keyboard *page 2 - 5*
2. Remove the battery *page 2 - 6*
3. Remove the HDD *page 2 - 8*

To remove the System Memory:

1. Remove the keyboard *page 2 - 5*
2. Remove the battery *page 2 - 6*
3. Remove the system memory *page 2 - 10*

To remove and install the M.2 SSD:

1. Remove the keyboard *page 2 - 5*
2. Remove the battery *page 2 - 6*
3. Remove the M.2 SSD *page 2 - 11*

To remove the Wireless LAN Module:

1. Remove the keyboard *page 2 - 5*
2. Remove the battery *page 2 - 6*
3. Remove the WLAN *page 2 - 12*

To remove the 4G Module:

1. Remove the keyboard *page 2 - 5*
2. Remove the battery *page 2 - 6*
3. Remove the 4G *page 2 - 14*

To remove the CCD Module:

1. Remove the keyboard *page 2 - 5*
2. Remove the battery *page 2 - 6*
3. Remove the CCD module *page 2 - 15*

Removing the Keyboard

1. Turn **off** the computer, turn it over.
2. Remove screws 1 - 2 from the bottom of the computer.
3. Open it up with the LCD on a flat surface before pressing at point 3 to release the keyboard module (use the special eject stick 4 to do this) while releasing the keyboard in the direction of the arrow 5 as shown (***Figure 1a***).
4. Carefully lift the keyboard 6 up, being careful not to bend the keyboard ribbon cable 7. Disconnect the keyboard ribbon cable 7 from the locking collar socket by using a flat-head screwdriver to pry the locking collar pins 8 away from the base (***Figure 1b***).
5. Carefully lift the keyboard 6 off the computer (***Figure 1c***).

a.

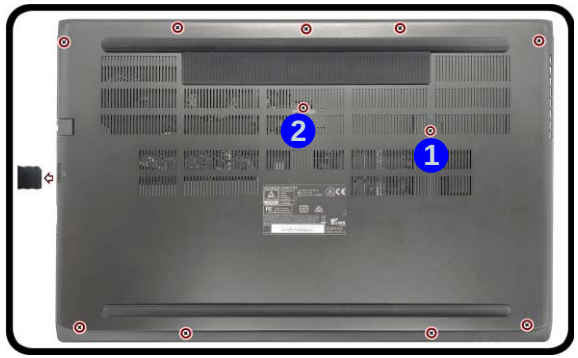

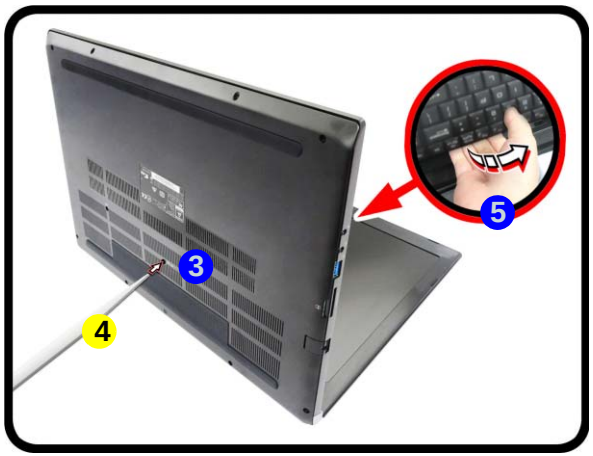

b.

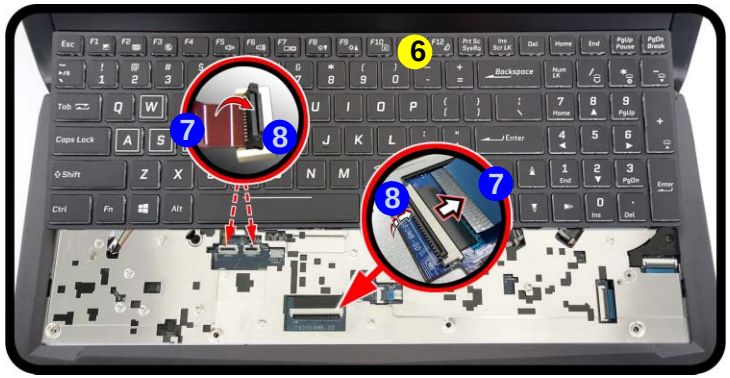

c.

Figure 1
Keyboard Removal

a. Remove the screws from the bottom of the computer and then eject the keyboard using a special eject stick to push the keyboard out while releasing the keyboard as shown.
b. Lift the keyboard up and disconnect the keyboard ribbon cable from the locking collar socket.
c. Remove the keyboard.

Re-inserting the Keyboard

When re-inserting the keyboard firstly, align the keyboard tabs at the bottom of the keyboard with the slots in the case.

4. Eject Stick
6. Keyboard

- 2 Screws

Figure 2
Battery Removal

a. Remove the screws.
b. Remove the SD cover and screws.
c. Remove the bottom case.

Removing the Battery

1. Turn the computer **off**, and remove the keyboard (***page 2 - 5***).
2. Remove screws 1 - 5 (***Figure 2a***).
3. Remove the SD card cover 6 and screws 7 - 15 (***Figure 2b***).
4. Carefully lift the bottom case 16 up in the direction of the arrow at point 17 and remove it (***Figure 2c***).

a.

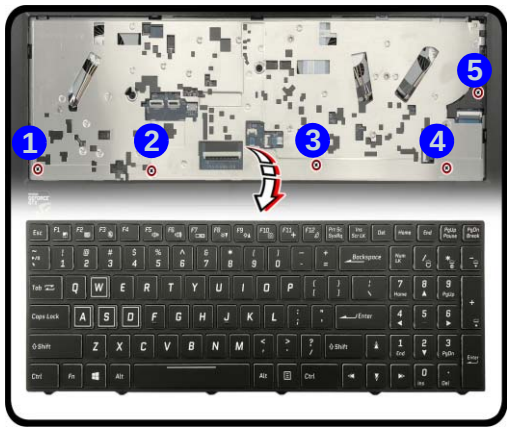

b.

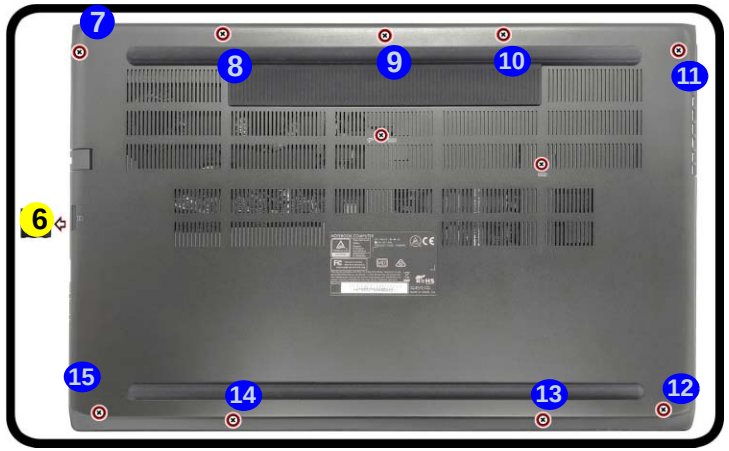

c.

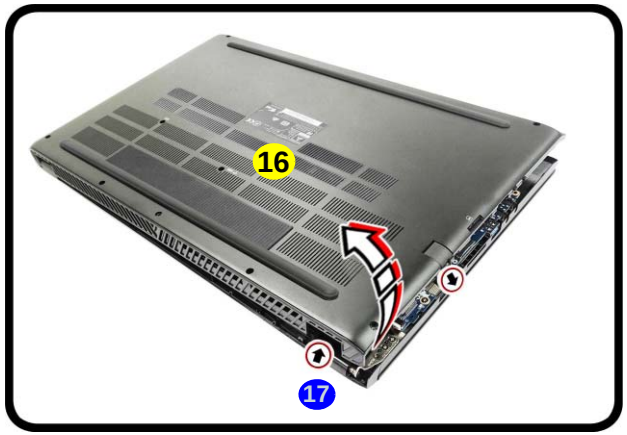

1. SD Card Cover
16. Bottom Case

- 14 Screws

5. The battery will be visible at point 18 on the computer (*Figure 3d*).
6. Carefully disconnect the cable 19, then remove screws 20 - 21 (*Figure 3e*).
7. Lift the battery 22 off the computer (*Figure 3f*).
8. Reverse the process to install a new battery (do not forget to replace all the screws and bottom cover).

Figure 3
Battery Removal (cont'd.)

d. Locate the battery.
e. Disconnect the cable and remove the screws.
f. Lift the battery off the computer.

d.

e.

f.

22. Battery

- 2 Screws

Figure 4
HDD Assembly Removal

a. Locate the HDD.
b. Remove the screws.

Removing the Hard Disk Drive

The hard disk drive can be taken out to accommodate other 2.5" serial (SATA) hard disk drives with a height of 7mm (h). Follow your operating system's installation instructions, and install all necessary drivers and utilities (as outlined in **Chapter 4 of the User's Manual**) when setting up a new hard disk.

Hard Disk Disassembly Process

1. Turn **off** the computer, and remove the battery (***page 2 - 6***).
2. The HDD will be visible at point 1 on the mainboard (***Figure 4a***).
3. Remove screws 2 from the HDD assembly (***Figure 4b***).

a.

b.

6. Hard Disk

- 4 Screws

HDD System Warning

New HDD's are blank. Before you begin make sure:

You have backed up any data you want to keep from your old HDD.

You have all the CD-ROMs and FDDs required to install your operating system and programs.

If you have access to the internet, download the latest application and hardware driver updates for the operating system you plan to install. Copy these to a removable medium.

4. Slightly slide and pull the hard disk out.
5. Lift the hard disk assembly 3 out of the bay 4 (*Figure 5c*).
6. Remove screws 5 - 6 and bracket 7 from the hard disk 8 (*Figure 5d*).
7. Reverse the process to install a new hard disk (do not forget to replace the screws).

c.

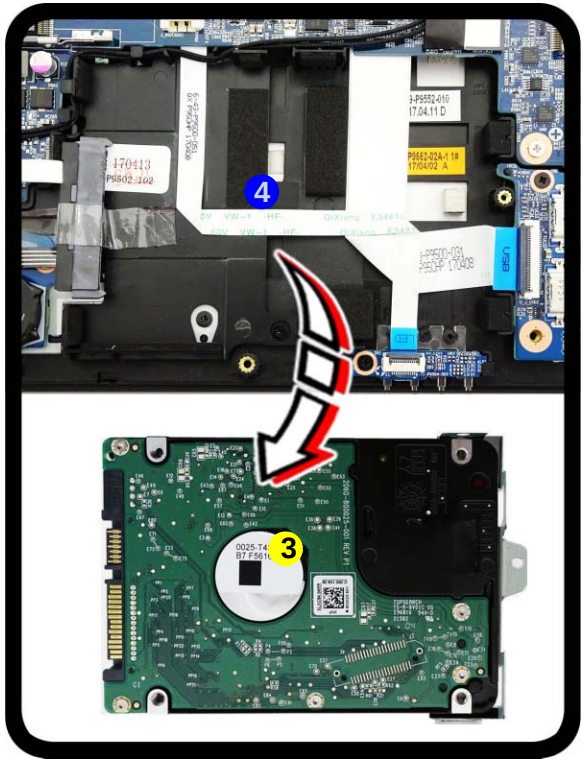

d.

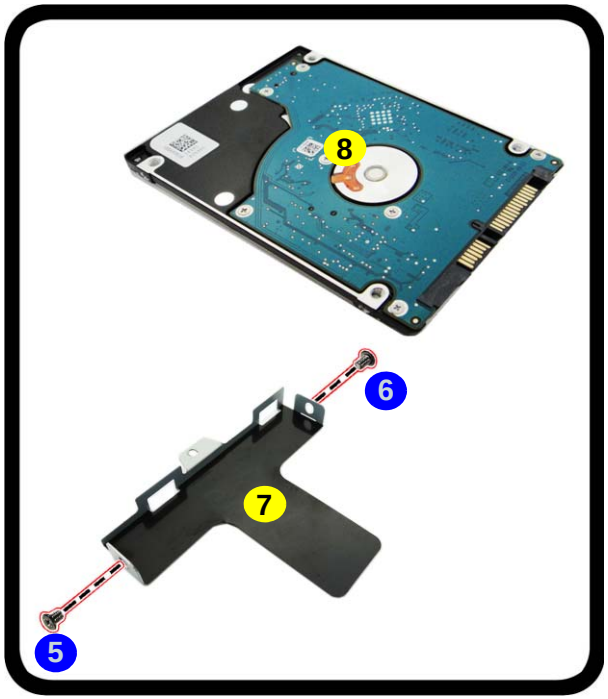

Figure 5
HDD Assembly Removal (cont'd.)

c. Slide and pull the HDD assembly out of the bay.
d. Remove the screws and bracket from the HDD.

3. HDD Assembly
7. HDD Bracket
8. HDD

- 2 Screws

Figure 6
RAM Module Removal

a. The RAM modules will be visible at point 1 on the mainboard.
b. Pull the release latches.
c. Remove the module.

Contact Warning

Be careful not to touch the metal pins on the module's connecting edge. Even the cleanest hands have oils which can attract particles, and degrade the module's performance.

4. RAM Module

Removing the System Memory (RAM)

The computer has four memory sockets for 260 pin Small Outline Dual In-line Memory Modules (SO-DIMM) supporting DDR4 Up to 2400 MHz. The main memory can be expanded up to 64GB. The total memory size is automatically detected by the POST routine once you turn on your computer.

Memory Upgrade Process

1. Turn **off** the computer, turn it over, remove the battery (***page 2 - 6***).
2. The RAM-2 modules will be visible at point 1 on the mainboard (***Figure 6a***).
3. Gently pull the two release latches (2 & 3) on the sides of the memory socket in the direction indicated by the arrows (***Figure 6b***). The RAM module 4 will pop-up (***Figure 6c***), and you can then remove it.
4. Pull the latches to release the second module if necessary.
5. Insert a new module holding it at about a 30° angle and fit the connectors firmly into the memory slot.
6. The module will only fit one way as defined by its pin alignment. Make sure the module is seated as far into the slot as it will go. DO NOT FORCE IT; it should fit without much pressure.
7. Press the module in and down towards the mainboard until the slot levers click into place to secure the module.
8. Replace the bottom cover and the screws (see ***page 2 - 6***).
9. Restart the computer to allow the BIOS to register the new memory configuration as it starts up.

a.

b.

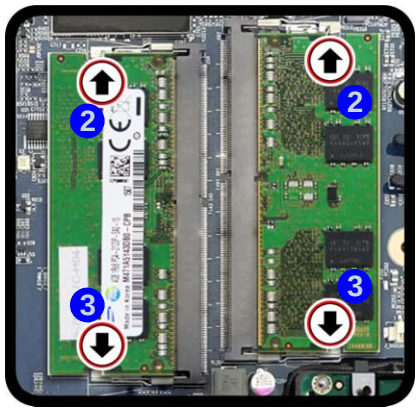

c.

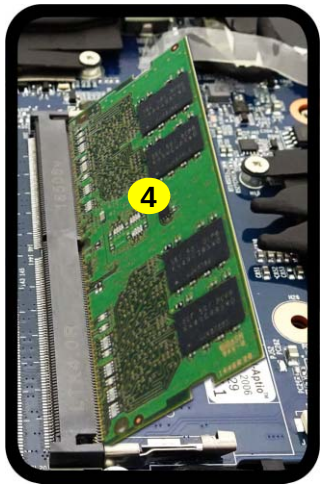

Removing the M.2 SSD Module

M.2 SSD-1 Removal Procedure

1. Turn **off** the computer, turn it over, remove the battery (*page 2 - 6*).
2. The M.2 SSD module will be visible at point 1 on the mainboard (*Figure 7a*).
3. Remove the screw 2 (*Figure 7b*).
4. The M.2 SSD module 3 (*Figure 7c*) will pop-up, and you can remove it from the computer.
5. Reverse the process to install a new module (do not forget to replace the screws and thermal pad).

Figure 7
M.2 SSD-1 Module Removal

a. Locate the M.2 SSD.
b. Remove the screw.
c. The M.2 SSD module will pop up.

a.

b.

c.

3.M2 SSD Module

- 1 Screw

Figure 8
Wireless LAN Module Removal

a. Locate the WLAN.
b. Disconnect the cables and remove the screw.
c. The WLAN module will pop up.

Note: Make sure you reconnect the antenna cable to the "1 + 2" socket (***Figure 8b***).

Removing the Wireless LAN Module

1. Turn **off** the computer, turn it over, remove the battery (***page 2 - 6***).
2. The Wireless LAN module will be visible at point 1 on the mainboard (***Figure 8a***).
3. Carefully disconnect the cables 2 & 3, and then remove the screw 4 (***Figure 8b***)
4. The Wireless LAN module 5 (***Figure 8c***) will pop-up, and you can remove it from the computer.

a.

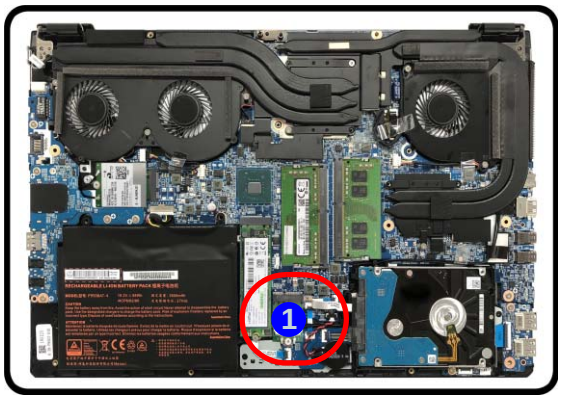

c.

b.

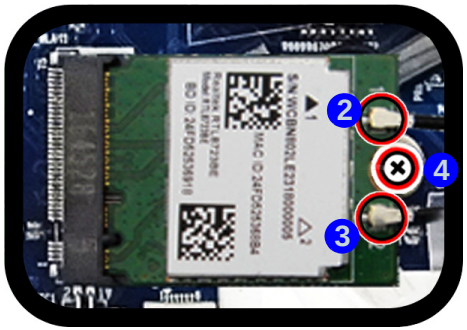

5.Wireless LAN Module

- 1 Screw

Wireless LAN, Combo, & LTE Module Cables

Note that the cables for connecting to the antennae on WLAN, WLAN & Bluetooth Combo, and LTE modules are not labelled. The cables/covers (each cable will have either a black or transparent cable cover) are color coded for identification as outlined in the table below.

Module Type	Antenna Type	Cable Color	Cable Cover Type
WLAN/WLAN & Bluetooth Combo	WM 1	Black	Transparent
	WM 2	Black	White
LTE Broadband	LTE 1	Black	Black
	LTE 2	Black	Blue

Cable 1 is usually connected to antenna 1 (Main) on the module, and cable 2 to antenna 2 (Aux).

Removing the 4G Module

Figure 9
4G Module Removal

a. Locate the module.
b. Disconnect the cables and remove the screw.
c. The module will pop-up.
d. Lift the module up off the socket.

4G Module Removal Procedure

1. Turn **off** the computer, remove the battery (***page 2 - 6***).
2. Locate the module, it is visible at point 1 (***Figure 9a***).
3. Carefully disconnect the cables 2 & 3, and then remove the screw 4 from the module (***Figure 9b***).
4. The module 5 will pop-up (***Figure 9c***).
5. Lift the module 5 up and off the computer (***Figure 9d***).

a.

c.

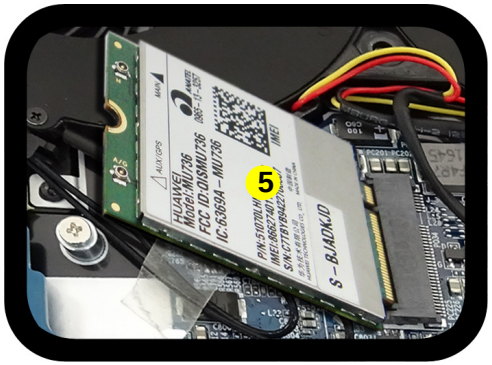

b.

d.

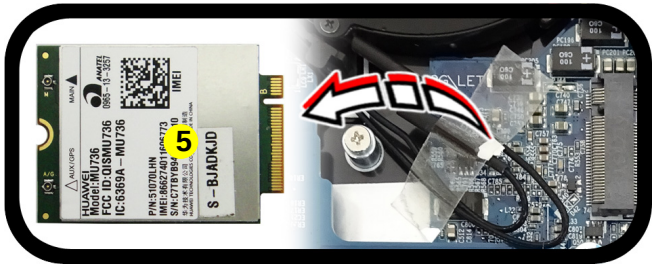

5. 3G/4G Module

- 1 Screw

Removing the CCD

1. Turn **off** the computer, turn it over to remove the battery (***page 2 - 6***).
2. Lay the computer down on a flat surface with the top case up forming a 130 degree angle. Carefully remove the mylar covers 1 - 2 and screws 3 - 4.
3. Run your fingers around the inner frame of the LCD panel to lift at points 5 - 6 as indicated by the arrows, and slightly lift up the outer frame at point 7 as indicated by the arrows, and then run your fingers again around the inner frame at the lower point 8 as indicated by the arrows (***Figure 10a***).
4. Remove the LCD front cover 5 (***Figure 10b***).

Figure 10
CCD Removal

a. Remove rubber and screws and then carefully release the inner frame of the LCD panel at the points indicated by the arrows.
b. Remove the LCD front cover.

a.

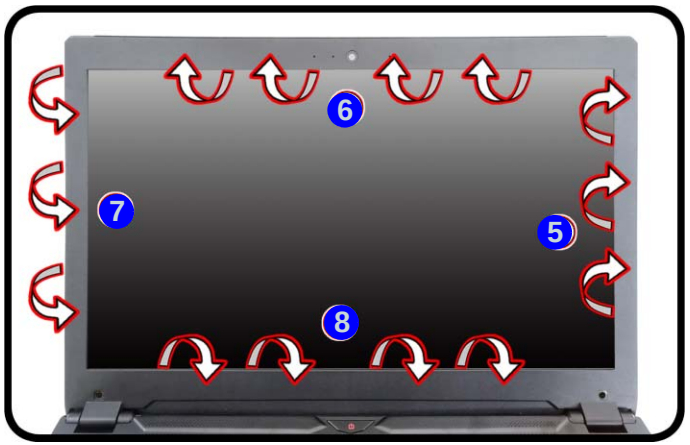

b.

9. LCD Front Cover

- 2 Screws

Figure 11
CCD Removal (cont'd)

c. Disconnect the cable.
d. Remove the CCD module.

5. Disconnect the cable 10 (***Figure 11c***).
6. Remove the CCD module 11 (***Figure 11d***).
7. Reverse the process to install a new CCD module.

c.

d.

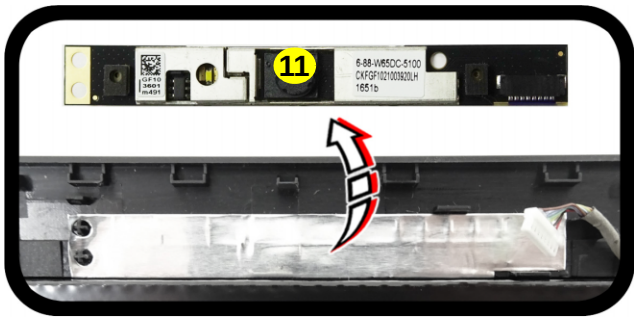

11. CCD Module

Appendix A:Part Lists

This appendix breaks down the ***P955ET1 / P955ET3*** series notebook's construction into a series of illustrations. The component part numbers are indicated in the tables opposite the drawings.

Note: This section indicates the *manufacturer's* part numbers. Your organization may use a different system, so be sure to cross-check any relevant documentation.

Note: Some assemblies may have parts in common (especially screws). However, the part lists DO NOT indicate the total number of duplicated parts used.

Note: Be sure to check any update notices. The parts shown in these illustrations are appropriate for the system at the time of publication. Over the product life, some parts may be improved or re-configured, resulting in *new* part numbers.

Part List Illustration Location

The following table indicates where to find the appropriate part list illustration.

Table A - 1
Part List Illustration Location

Part	
Top	*page A - 3*
Bottom	*page A - 4*
Main Board	*page A - 5*
HDD	*page A - 6*
LCD	*page A - 7*

Top

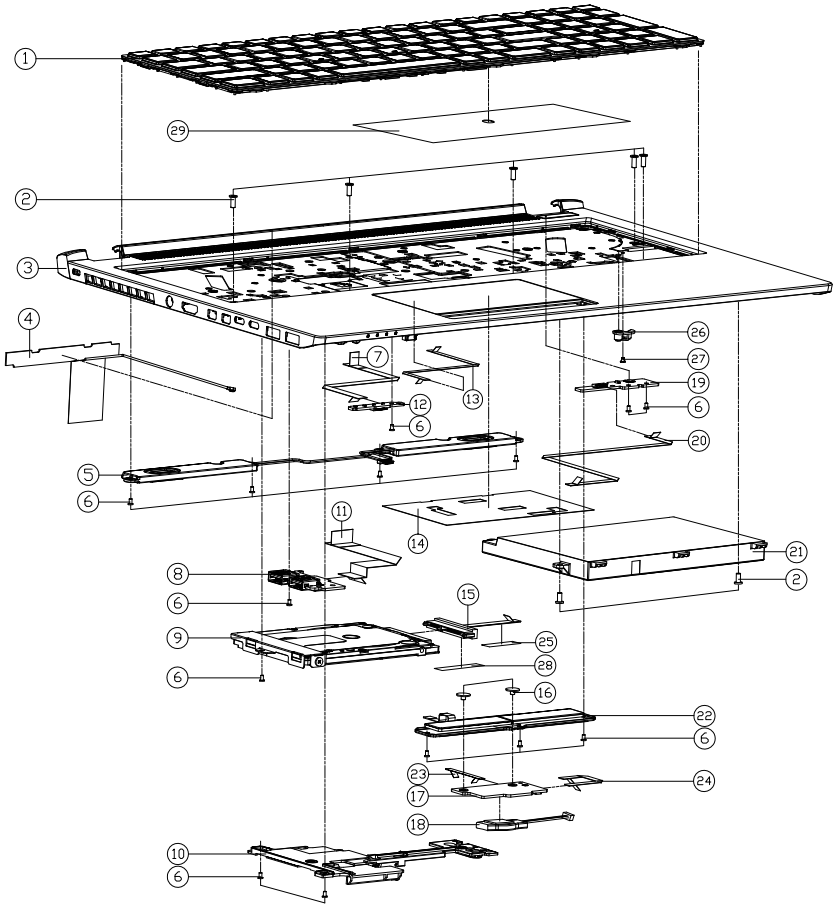

ITEM	PART NAME	PART NO	REMARK
1	[illegible]	6-80-N8500-011-1	
1	WHITE BL KB UOA CMKF2305J4C80 N5600 BLACK ISOLATION WITH WINDOW KEY + U/D FRAME	6-80-N7500-012-1	
2	.SCREW M2.5*6L K BZ ICT NY	6-35-82125-6RA	
3	<PRE-PROCESS> TOP CASE MODULE (W/FP(SECUREPAD)) FOR TP P955ER	6-78-P955ER02-010	
3	<PRE-PROCESS> TOP CASE MODULE (W/O FP(TOUCHPAD)) FOR TP P955ER	6-78-P955ER02-020	
4	ANTENNA PEAK 3G+LTE WIFI LTE-2 PCB BL 0.7G/0.08G/0.15G/0.06G/0.15G/0.25G/2.6GHZ L=300MM	6-23-7P955-040	
5	SPEAKER+CABLE MAIN BAL R 70MM/ L 123MM 2W 4Ω 4P 4TUSTER) P950HR V3.0	6-23-5P950-0S3	
6	SCREW M2*3L KI BZ ICT NY (DD=Ø4.5,DT=0.4)	6-35-B6120-3RD	
7	FFC CABLE LED TO MB L=141MM 5V 12P (QX) P950HP6	6-43-P9500-051	
8	USB3.0 REDRIVER BOARD V2.0 P950ER	6-77-P95E5-D02	
9	W/HDD ASS'Y P950HR	6-79-P950HR0J-010	
9	W/O HDD ASS'Y P950HR	6-79-P950HR0J-020	
10	HDD HOLDER MODULE P950ER	6-42-P95EJ-100	
11	FFC CABLE USB TO MB L=104.5MM 5V 30P (QX) P950HP6	6-43-P9500-031	
12	FRONT LED BOARD V2.0 P950HP6	6-77-P9504-D02	
13	FFC CABLE FINGER TO MB L=126MM 5V 6P (QX) P950HP6	6-43-P9500-040	FOR W/FP
14	TOP TP MYLAR PET P775DM2	6-40-P7752-211	
15	HDD CONC35100S-100D+PCB+W/CABLE (FFC CABLE 52MM) P950HP6	6-23-FP950-010	
16	SCREW M2*2L KI BK/Z ICT NY(Ø8,T=0.6)	6-35-B6120-2RE	
17	CLICK BOARD V4.0 P950ER	6-77-P95E2-D04	
18	BAT. 20MM 3V 220MAH W/CABLE 55MM BCR2032H5.5VMIUB (SHIHMEI)	6-23-22015-TE0	
19	POWER BOARD V1.0 P955HQ1	6-77-P955C-D01	
20	FFC CABLE POWER TO MB L=226MM 5V 4P (QX) P955HQ3	6-43-P9550-011-1	
21	[illegible]	6-87-P950S-52B01	
21	[illegible]	6-87-P950S-51E03	
22	FUNCTION KEY FOR CLICK BUTTON MODULE W/O FINGER P650RE6	6-23-KP65R-023	
23	FFC CABLE CLICK TO MB L=35MM 5V 6P (CNJS) P950ER	6-43-P95E0-010-1	
24	FFC CABLE CLICK TO TP L=60MM 5V 8P (QX) P950HP6	6-43-P9502-010	
25	TAPE MYLAR (C),MYLAR M550J	6-40-M55J2-030	
26	KB SHIELDING 3G NUT BKT SGCC P950ER	6-33-P95E2-020	
27	SCREW M2*2L KI NI ICT NY (DD=Ø5 ,T=0.5)	6-35-B1120-2R0	
28	TAPE MYLAR (A),MYLAR M550J	6-40-M55J2-010	
29	BACKLIGHT KB THERMAL(169.1*45.5) AL FOIL+3M467 N550RC	6-47-N5507-010	

Figure A - 1
Top

A.Part Lists

Bottom

Figure A - 2
Bottom

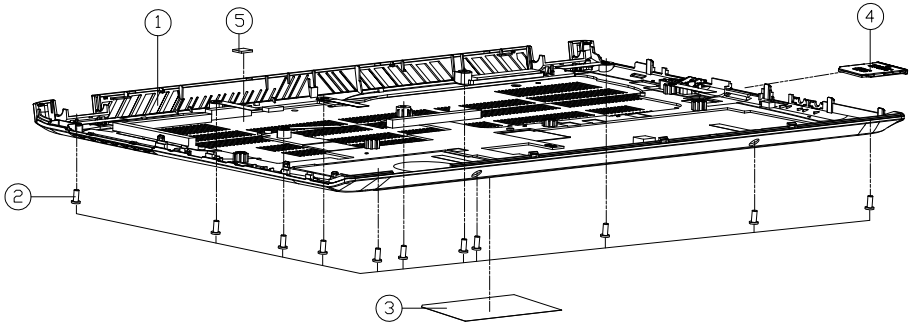

ITEM	PART NAME	PART NO	REMARK
1	BOTTOM CASE MODULE P955ET3	6-39-P95T3-010	
2	.SCREW M2.5*6L K BZ ICT NY	6-35-82125-6RA	
3	PRODUCT LABEL FOR P955ET3	6-45-P955ET33-010	
3	PRODUCT LABEL FOR P955ET1	6-45-P955ET13-010	
4	DUMMY 3IN1 NON PUSH TYPE PC+ABS (C7230P-701DEXCHANGE) W9708JW	6-42-W9708-011	
5	HS THERMAL PAD FSL-BS(14*14*1.5) P955ET3	6-48-P95T8-010	

Main Board

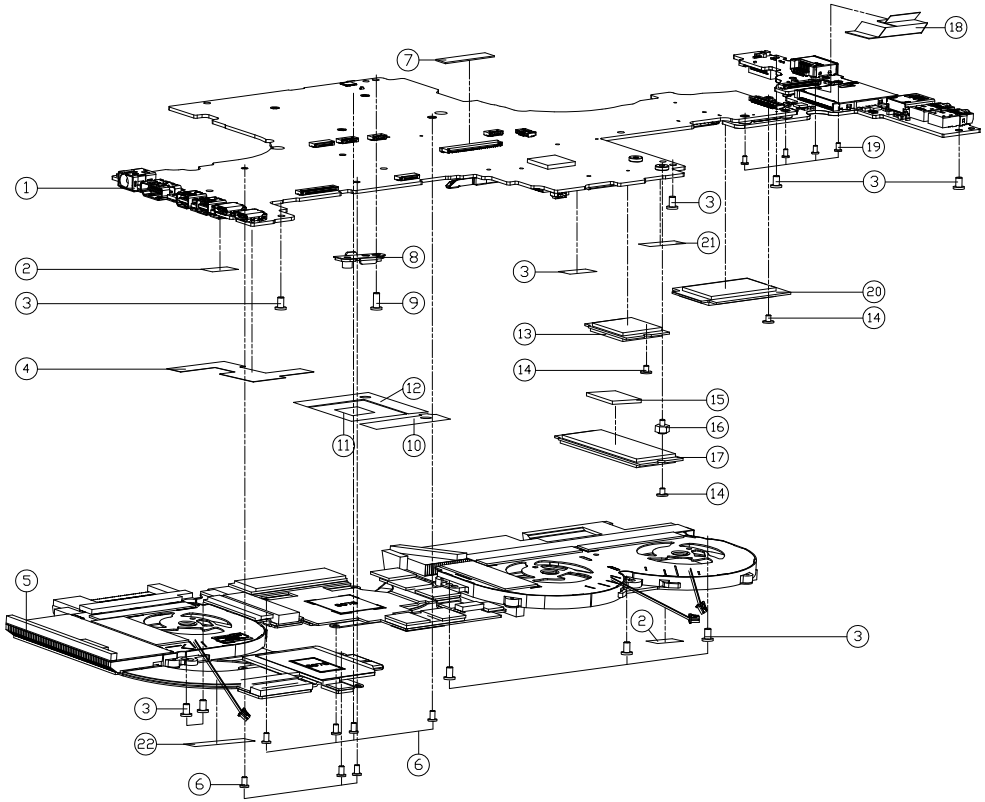

ITEM	PART NAME	PART NO	REMARK
1	MB 1DDR3(NV)-1GDR(CS) VGA CPU(AL1.0)(AL) PM(CHD) IC(REV 1.0)(AL 0A1.0) LED VGA(AL 0A0) VGA PRESET	6-77-P955ET1A-N02A-1A	
1	MB 1DDR3(NV)-1GDR(CS) VGA CPU(AL1)(PM)(AL) LED(CHD) IC(REV 1.0)(AL 0A1.0) LED VGA(AL 0A0) VGA PRESET	6-77-P955ET1A-N02A-2A	
1	MB 1DDR3(NV)-1GDR(CS) VGA CPU(AL1.1)(PM)(AL) IC(REV 1.0)(AL 0A1.0) LED VGA(AL 0A0) VGA PRESET	6-77-P955ET1A-N02A-3A	
1	MB 1DDR3(NV)-1GDR(CS) VGA CPU(AL1.1)(PM)(AL) IC(REV 1.0)(AL 0A1.0) LED VGA(AL 0A0) VGA PRESET	6-77-P955ET1A-N02A-A	
1	MB 1DDR3(NV)-1GDR(CS) VGA CPU(AL1.1)(PM)(AL) IC(REV 1.0)(AL 0A1.0) LED VGA(AL 0A0) VGA PRESET	6-77-P955ET1A-N02A-B	
1	MB 1DDR3(NV)-1GDR(CS) VGA CPU(AL1.0)(AL) PM(CHD) IC(REV 1.0)(AL 0A1.0) LED VGA(AL 0A0) VGA PRESET	6-77-P955ET3A-N02A-1A	
1	MB 1DDR3(NV)-1GDR(CS) VGA CPU(AL1)(PM)(AL) LED(CHD) IC(REV 1.0)(AL 0A1.0) LED VGA(AL 0A0) VGA PRESET	6-77-P955ET3A-N02A-2A	
1	MB 1DDR3(NV)-1GDR(CS) VGA CPU(AL1.1)(PM)(AL) IC(REV 1.0)(AL 0A1.0) LED VGA(AL 0A0) VGA PRESET	6-77-P955ET3A-N02A-3A	
1	MB 1DDR3(NV)-1GDR(CS) VGA CPU(AL1.1)(PM)(AL) IC(REV 1.0)(AL 0A1.0) LED VGA(AL 0A0) VGA PRESET	6-77-P955ET3A-N02A-A	
1	MB 1DDR3(NV)-1GDR(CS) VGA CPU(AL1.1)(PM)(AL) IC(REV 1.0)(AL 0A1.0) LED VGA(AL 0A0) VGA PRESET	6-77-P955ET3A-N02A-B	
2	TAPE MYLAR TRANSPARENT (20*10*0.05) P180HM	6-40-P1803-020	
3	SCREW M2.5*4L (D=4.6,T=0.8) KI NI ICT NY	6-35-B1125-4RA	
4	MB AL MYLAR+PET P950ER	6-40-P95ES-010	
5	CPU & GPU HEATSINK MODULE P955ET3	6-31-P95T2-101	
6	.SCREW M2*4L KI BZ ICT NY	6-35-B6120-4RA	
7	KB CONNECTOR MYLAR 25*6.5*0.5T FR83 N130BU	6-40-N1303-011	
8	MB SCREW BKT SECC T=1.0 P950HP6	6-33-P9503-011	
9	.SCREW M2.5*6L K BZ ICT NY	6-35-82125-6RA	
10	ABSORBER 50*9*0.3T HAFS-TE30 P950HR	6-47-P9502-021	
11	N17E-G2 CHIP MYLAR PET (37.5*37.5*0.1) P750DM2	6-40-P75DS-020	
12	ABSORBER 52*43*0.3T HAFS-TE30 P950HR	6-47-P9502-011	
13	WLAN-N CONB DUAL BAND INTEL WANDER PEAK 2 9560NGW NON-VPRO 2X2 AC+BT WSB+BZ 22CB F75WN	6-88-P75FF-4210	OPTION
13	WLAN-N CONB DUAL BAND INTEL JEFFERSON PEAK 1 5100AGN NON-VPRO 3X3 DIVERSITY ANTENNA AC+BT WSB+BMB BZ 22CB	6-88-N24GF-4200	OPTION
13	WLAN-N CONB DUAL BAND INTEL JEFFERSON PEAK 2 5100AGN NON-VPRO 2X2 AC+BT WSB+BMB BZ 22CB	6-88-N24GF-4220	OPTION
13	WLAN-N 3X CONB DUAL BAND KIVET KILLER E2200(INTEL 5300AGN)(ATH) 2X2 AC+BT WSB+BZ 22CB	6-88-P95EF-4200	OPTION
14	SCREW M2*2L KI NI ICT NY (DD=#5 ,T=0.5)	6-35-B1120-2R0	
15	THERMAL PAD MA500 (17.3*17.3*2.75T)MM N750BU	6-48-N7503-010	
16	.SCREW M2*2.5L (H=2.5 D=5) STEEL ICT NY FOR NGFF CARD(CHANGE)	6-35-ZA120-2R5-1	
17	SSD M2 2280 256GB MICRON MTFDDAV256TDN (DDR) SATA3 (MICRON 20 TLC 64 LAYERS)	6-85-D51R6-101	OPTION
17	SSD M2 2280 512GB SAMSUNG MZVLB512HAJQ-00000 (PM830) PCIE (GEN 3) TLC 64 LAYERS	6-85-D515B-S08	OPTION
17	SSD M2 2280 256GB PHISON S10FE5A4TBZZ-TI (DD) SATA3 (TOSHIBA 19 TLC 64 LAYERS) TF8GB7BN2	6-85-D51R6-H04	OPTION
18	FFC CABLE RJ45 TO MB L= 59MM 5V 30P (0.5) P950ER	6-43-P95E0-020-2	
19	SCREW M2*3L KI BZ ICT NY (DD=#4.5,DT=0.4)	6-35-B6120-3RD	
20	UL & HDMI (SMALL) ETRONIC THERMAL VERSION 2.5(CHANGE) FOR EMONY OF CARD (SD INTERFACE BUSINESS) ATHEROS (PCI-E)	6-88-N5506-8802	OPTION
21	TAPE MYLAR (C),MYLAR M550J	6-40-M55J2-030	
22	TAPE MYLAR (A),MYLAR M550J	6-40-M55J2-010	

Figure A - 3
Main Board

HDD

Figure A - 4
HDD

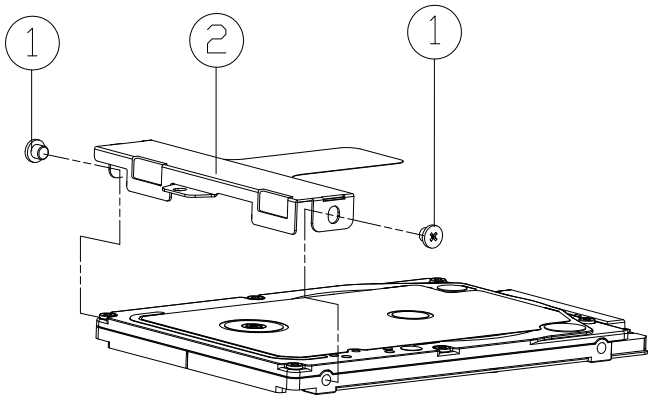

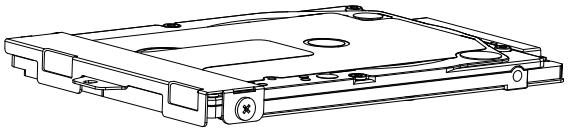

ITEM	PART NAME	PART NO	REMARK
1	SCREW M3*3.0L KI NI ICT NY	6-35-B1130-3R5	
2	HDD BKT 7MM SECC T=0.5 N250LU	6-33-N250J-011	

LCD

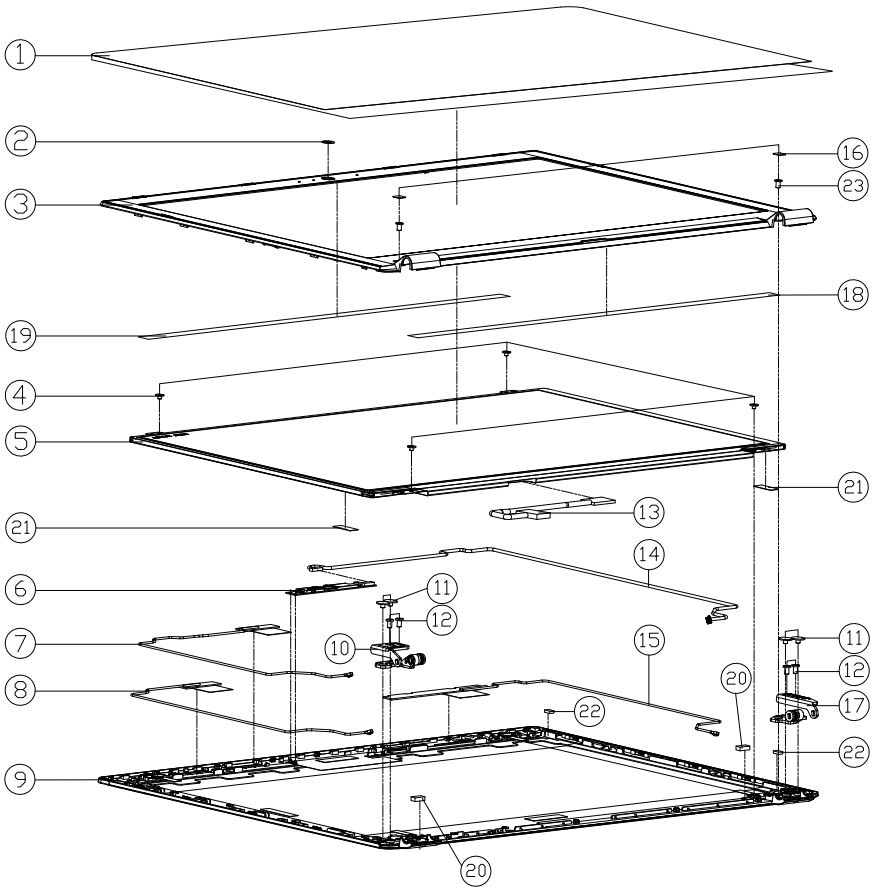

ITEM	PART NAME	PART NO	REMARK
1	LCD PROTECT MYLAR BOPP N650DU	6-40-N6508-040	
2	CCD LENS PC P950HP6	6-42-P9501-020	
3	FRONT COVER MODULE P955HQ3	6-39-P9551-014	
3	FRONT COVER MODULE (BOE PANEL) P955HQ3	6-39-P9551-110	ONLY FOR 6-50-L1B32-G020 6-50-L1B32-Z100
4	SCREW M2*2L KI NI ICT NY (DD=Ø5 ,T=0.5)	6-35-B1120-2R0	FOR 6-50-L1B32-G020 6-50-L1B32-L090 6-50-L1B32-V070 6-50-L1B32-Z100
5	LCD 15.6" UHD/WVA/N7/NON GT/EIP AU B156ZAN02.2 OV/VA/AALED 32PM	6-50-L1B32-G020	
5	LCD 15.6" FHD/IPS/N7/NON GT/EIP LG LP156WF6-SPP1 (LED)32PM	6-50-LBB32-L020	
5	LCD 15.6" FHD/IPS/SW G-SYNC/N7/NON GT/EIP LG LP156WF6-SPP2 (LED) 32PM	6-50-LBB32-L090	
5	LCD 15.6" FHD/120HZ/N9/NON GT/EIP INNOLUX N156HHE-GA1 (LED)32PM	6-50-LBB32-V070	
5	LCD N156" FHD/IPS/144HZ/NVSR G-SYNC/N7/NON GT/EIP LG LP156WFG-SPK2 (LED) 26PM	6-50-LBB26-L120	
5	LCD 15.6" UHD/WVA/ABODE 100/NON GT/EIP BOE NV156QUM-N43 LED 32PM	6-50-L1B32-Z100	
6	UVC CAMERA CHICONY FIX CCF81B0N2950U1 2M FHD OV2740 W5300C FACIAL W/WHITE-LED W/2P-MIC	6-88-W65DC-5100	OPTION
6	UVC CAMERA BISON FIX IMB4K6/TH-2M 2M FHD OV2740 P7750R FACIAL W/WHITE-LED W/2P-MIC	6-88-P775C-4901	OPTION
7	ANTENNA IPEX4 WLAN WGT W.2 PCB AL 2.4G/5G W.2-800MM N950KP6	6-23-7N85K-030	
8	ANTENNA IPEX4 WLAN WGT W.1 PCB 2.4G/5G L-750MM N250LU	6-23-7N250-030	
9	BACK COVER MODULE P955HQ3	6-39-P9551-024	
9	(PRE-PROCESS) BACK COVER MODULE FOR LG P955ER	6-78-P955ER01-010	ONLY FOR 6-50-LBB26-L120
9	(PRE-PROCESS) BACK COVER MODULE (CNC) P955HQ3	6-78-P955HQ31-010	ONLY FOR 6-50-L1B32-Z100
10	HINGE L (SGCC) SNR P955HQ3	6-33-P9551-0L1	
11	SCREW M2.5*2.5L KI BK/Z ICT NY(Ø8,T=0.6)	6-35-B6125-2R5	
12	SCREW M2.5*4L (D=4.6,T=0.8) KI NI ICT NY	6-35-B1125-4RA	
13	COAXIAL CABLE FOR EIP 40K2K 380MM (D 19V 40PIN OHT/LV CONNECTOL0.8(0mm)) P950HP6	6-43-P9501-020-1N	
13	WIRE CABLE FOR EIP 300MM (D 19V 30PIN OHT/LV CONNECTOL0.6(0mm)) P950HP6	6-43-P9501-010-2N	
13	COAXIAL CABLE FOR EIP 40K2K 420MM (D 19V 40PIN OHT/LV CONNECIELIO(mm)) P955HQ	6-43-P9551-010-N	
14	WIRE CABLE CCD+MIC TO MB 8PIN W840SU-T (HL)	6-43-W840T-012	
15	ANTENNA IPEX 3GAUTE WGT LTE-1 PCB BR 0.7/0.65/0.95/0.8/0.15%/2%/2.5GHZ L-500MM P955HQ3	6-23-7P955-030	
16	FRONT COVER SCREW MYLAR PC P750ZM	6-40-P7508-030	
17	HINGE R (SGCC) SNR P955HQ3	6-33-P9551-0R1	
18	FRONT COVER GLUE U&D (NITTO 5000 330*3*0.15) FOR W655SZ	6-40-W6551-010	ONLY FOR 6-50-L1B32-G020
19	FRONT COVER BLACK PET MYLAR 330*3*0.3T	6-40-00150-336	
20	LCD RUBBER(9*3*3T) SILICONE N957TP6	6-47-N9571-060	ONLY FOR 6-50-LBB26-L120
21	MYLAR PET FOR BOE PANEL P955HQ3	6-40-P9551-020	ONLY FOR 6-50-L1B32-Z100
22	LCD RUBBER (9*6.5*3T) SILICONE N957TP6	6-47-N9571-070	ONLY FOR 6-50-LBB26-L120
23	.SCREW M2.5*4L KI NI ICT NY	6-35-21125-4R0	

Figure A - 5
LCD

Appendix B: Schematic Diagrams

This appendix has circuit diagrams of the ***P955ET1 / P955ET3*** notebook's PCB's. The following table indicates where to find the appropriate schematic diagram.

Diagram - Page	Diagram - Page	Diagram - Page	Diagram - Page
System Block Diagram - Page B - 2	*Frame Buffer Partition C_D - Page B - 23*	*ASM1562 1/3 - Page B - 44*	*AC_In, Charger - Page B - 65*
Processor 1/7 - Page B - 3	*GPU Decoupling 1 - Page B - 24*	*ASM1543 2/3 - Page B - 45*	*LED Board - Page B - 66*
Processor 2/7 - Page B - 4	*GPU Decoupling 2 - Page B - 25*	*ASM1543 3/3 - Page B - 46*	*Click Board - Page B - 67*
Processor 3/7 - Page B - 5	*Straps and XTAL - Page B - 26*	*TPM, TP - Page B - 47*	*Reader Board - Page B - 68*
Processor 4/7 - Page B - 6	*IFP I/O Interface - Page B - 27*	*Connector - Page B - 48*	*USB Board - Page B - 69*
Processor 5/7 - Page B - 7	*Misc - GPIO, I2C and ROM - Page B - 28*	*MFan, LID, LED - Page B - 49*	*LAN Board - Page B - 70*
Processor 6/7 - Page B - 8	*GPU NVVDD, FBVDDQ - Page B - 29*	*M.2 WLAN+BT, PCIE4X SSD - Page B - 50*	*Power Board - Page B - 71*
Processor 7/7 - Page B - 9	*GPU GND & Sequence - Page B - 30*	*M.2 3G/LTE, SIM - Page B - 51*	*Power Sequence - Page B - 72*
DDR4 CHA SO-DIMM_0 - Page B - 10	*PCH 1/9 - Page B - 31*	*5V, 5VS, 3.3V, 3.3VS - Page B - 52*	*USB Board, Receiver - Page B - 73*
DDR4 CHB SO-DIMM_0 - Page B - 11	*PCH 2/9 - Page B - 32*	*VDD3, VDD5 - Page B - 53*	
Panel, Inverter - Page B - 12	*PCH 3/9 - Page B - 33*	*1V8_RUN/AON, 3.3VA - Page B - 54*	
Mini DP Port - Page B - 13	*PCH 4/9 - Page B - 34*	*1.8VA/1.05V_XX, NV3V3 - Page B - 55*	
HDMI Connector - Page B - 14	*PCH 5/9 - Page B - 35*	*PEX_VDD - Page B - 56*	
VGA PCI Express - Page B - 15	*PCH 6/9 - Page B - 36*	*1.05VA, VCCIO - Page B - 57*	
GPU Frame Buffer Partition - Page B - 16	*PCH 7/9 - Page B - 37*	*DDR 1.2V, 0.6VS - Page B - 58*	
Frame Buffer Partition A - Page B - 17	*PCH 8/9 - Page B - 38*	*VCore & VCCGT & VCCSA - Page B - 59*	
Frame Buffer Partition B - Page B - 18	*PCH 9/9 - Page B - 39*	*VCore Output - Page B - 60*	
Frame Buffer Partition A_B - Page B - 19	*KBC IT8587 - Page B - 40*	*VCCGT, VCCSA Output - Page B - 61*	
GPU Frame Buffer Partition - Page B - 20	*Backlight KB - Page B - 41*	*VNVVDD 1 - Page B - 62*	
Frame Buffer Partition C - Page B - 21	*Realtek ALC1220 - Page B - 42*	*NVVDD 2 - Page B - 63*	
Frame Buffer Partition D - Page B - 22	*Smart AMP ALC1306 - Page B - 43*	*FBVDDQ - Page B - 64*	

Table B - 1
SCHEMATIC DIAGRAMS

Version Note

The schematic diagrams in this chapter are based upon version 6-7P-P95E8-002. If your mainboard (or other boards) are a later version, please check with the Service Center for updated diagrams (if required).

System Block Diagram

Sheet 1 of 72
System Block Diagram

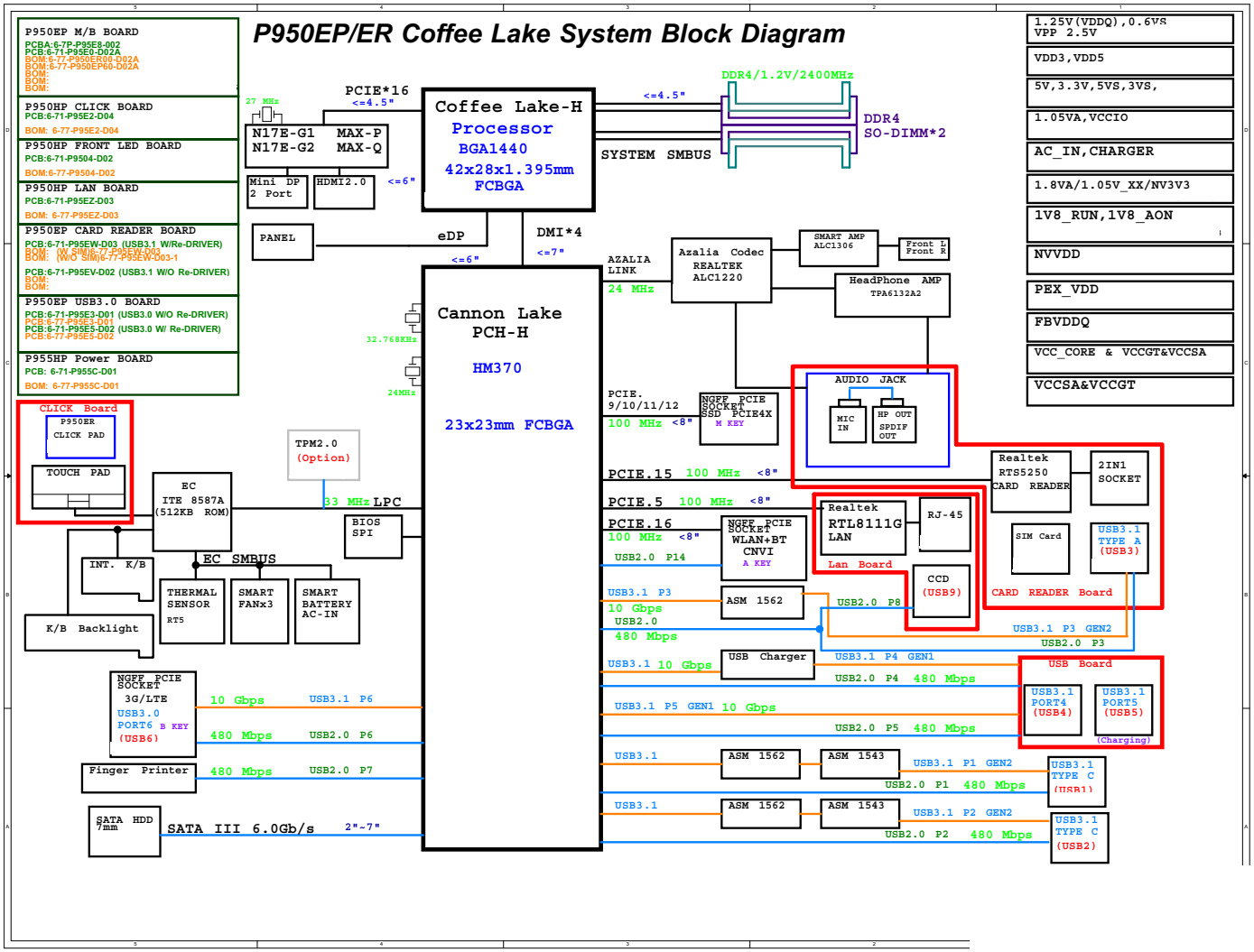

Processor 1/7

Sheet 2 of 72
Processor 1/7

Processor 2/7

Sheet 3 of 72
Processor 2/7

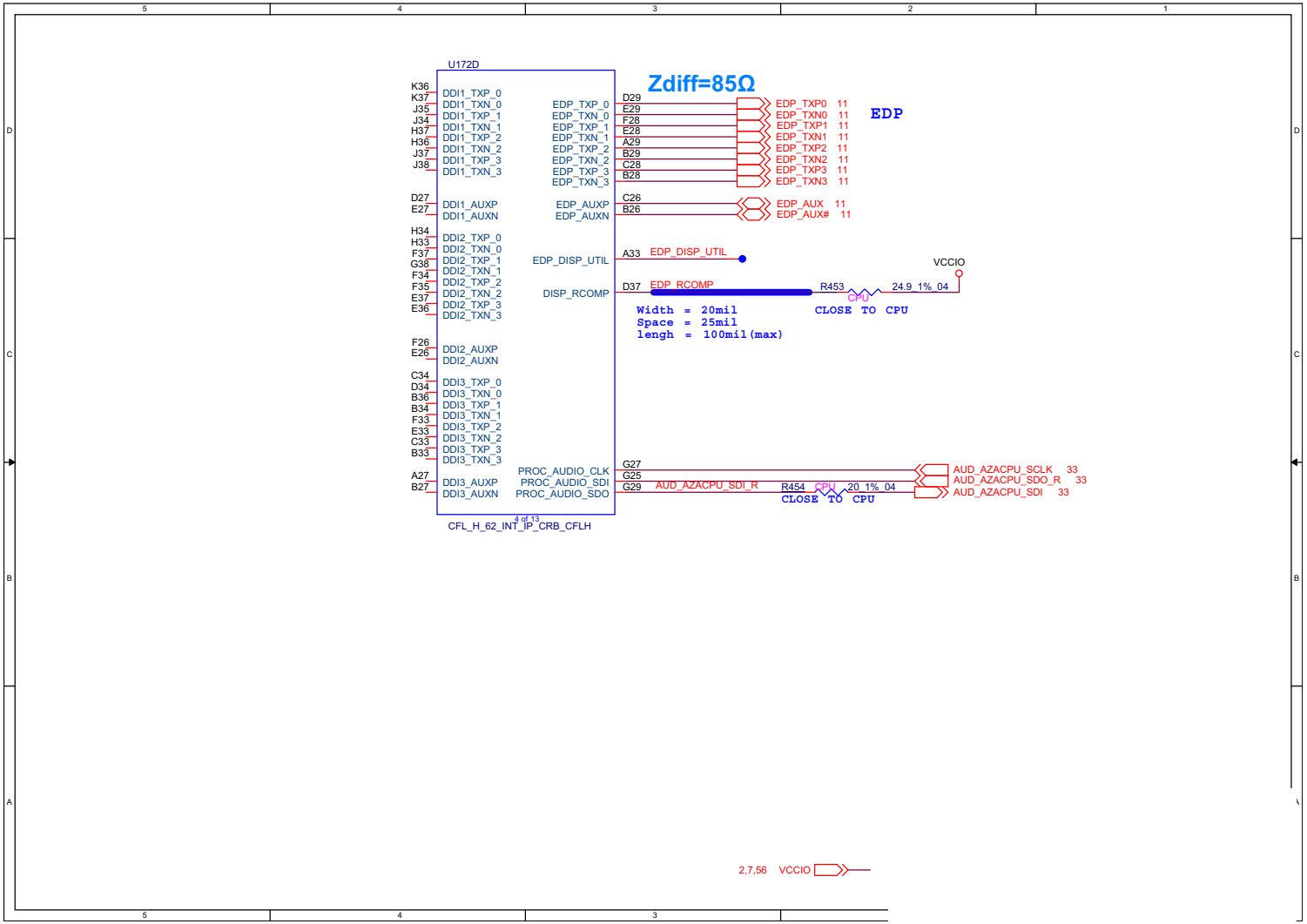

Processor 3/7

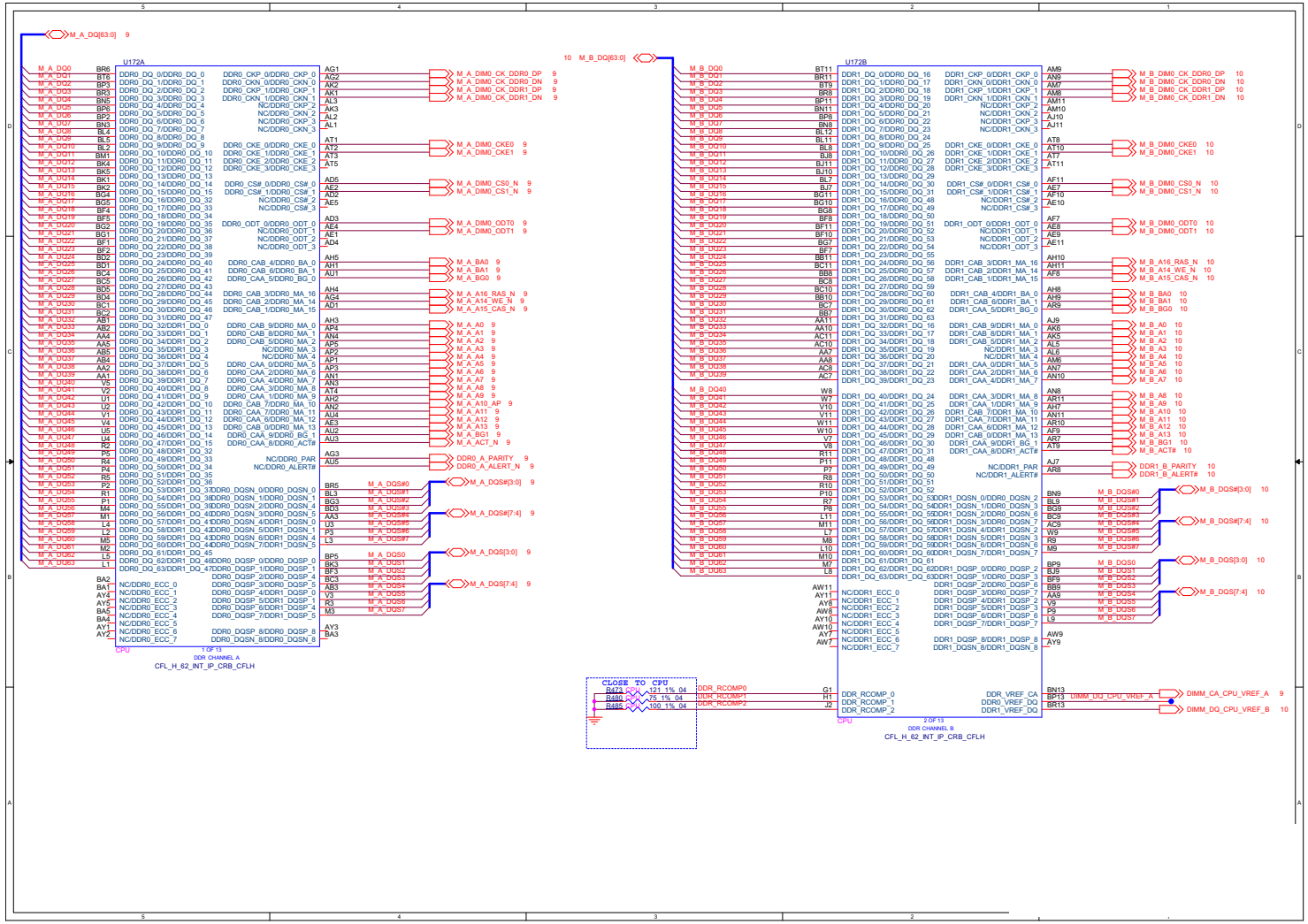

Sheet 4 of 72
Processor 3/7

Processor 4/7

Sheet 5 of 72
Processor 4/7

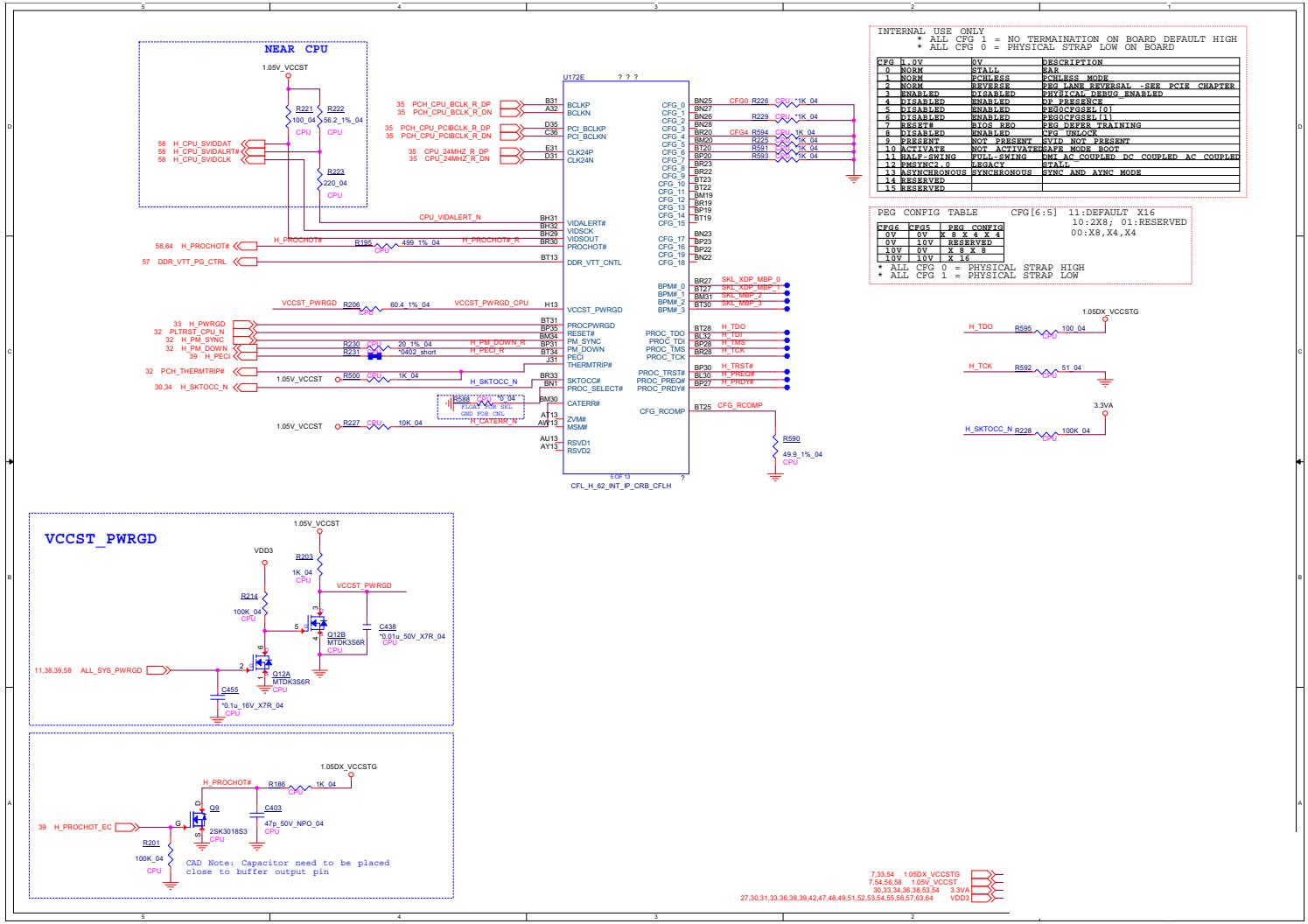

Processor 5/7

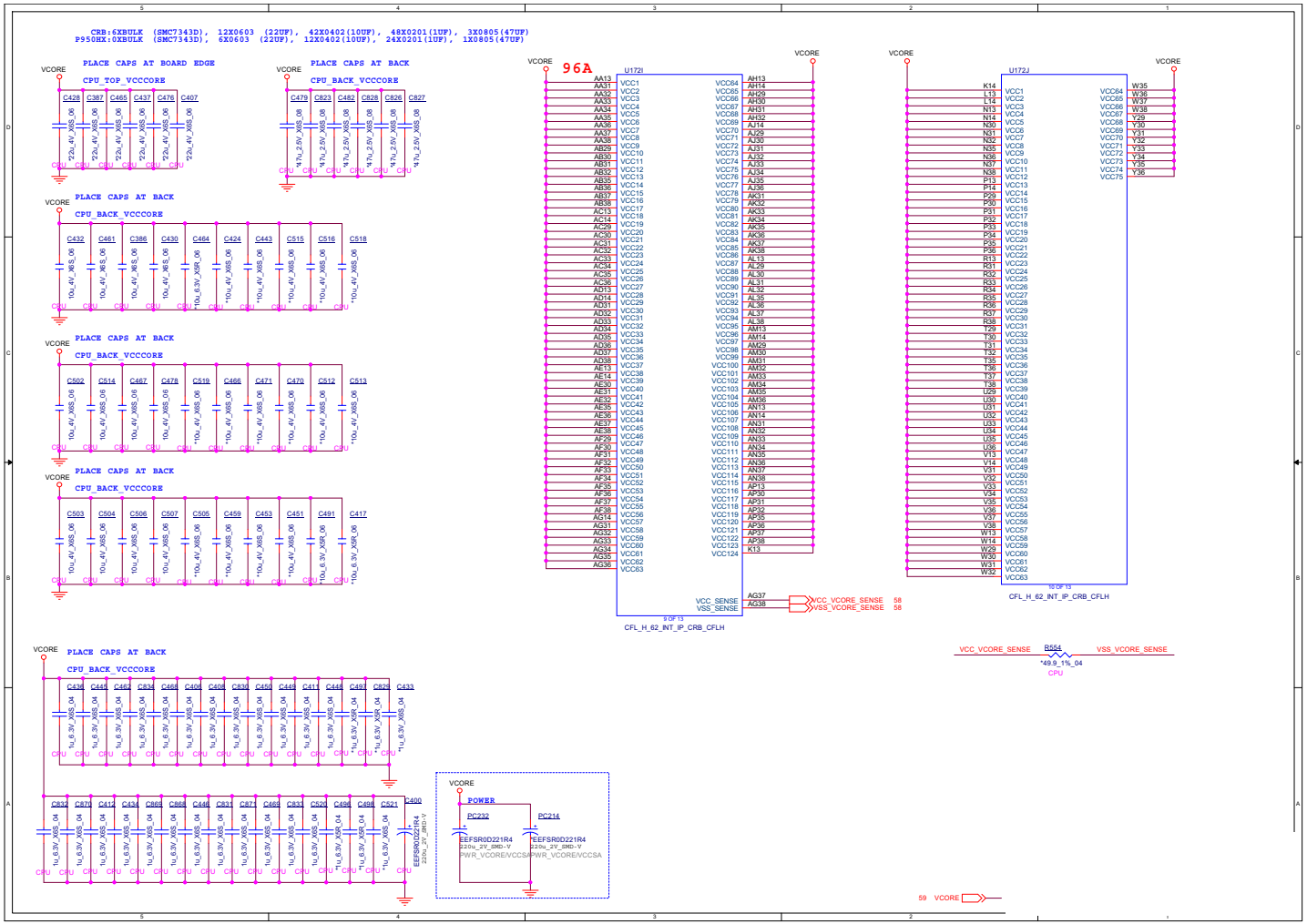

Sheet 6 of 72
Processor 5/7

Processor 6/7

Sheet 7 of 72
Processor 6/

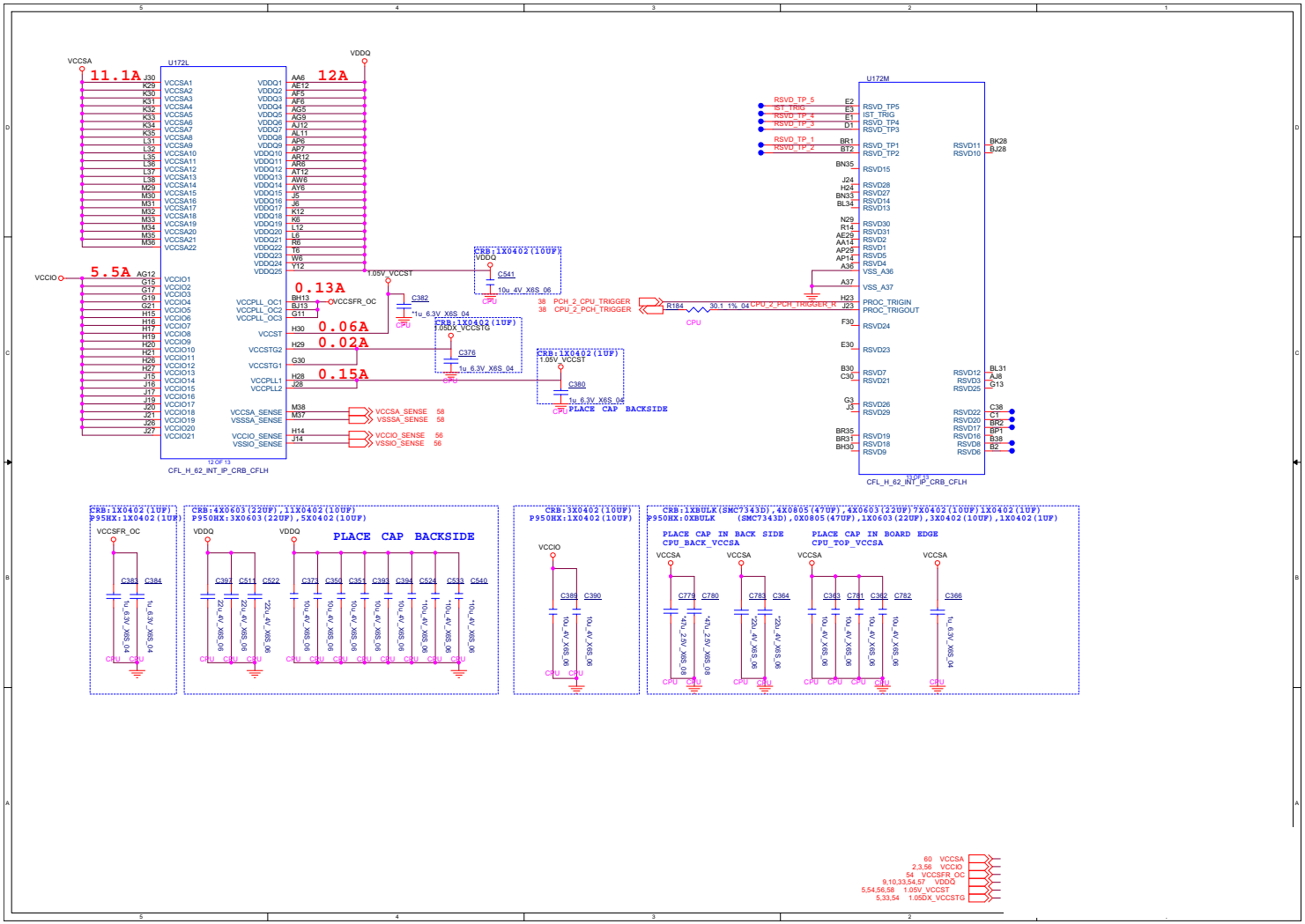

Processor 7/7

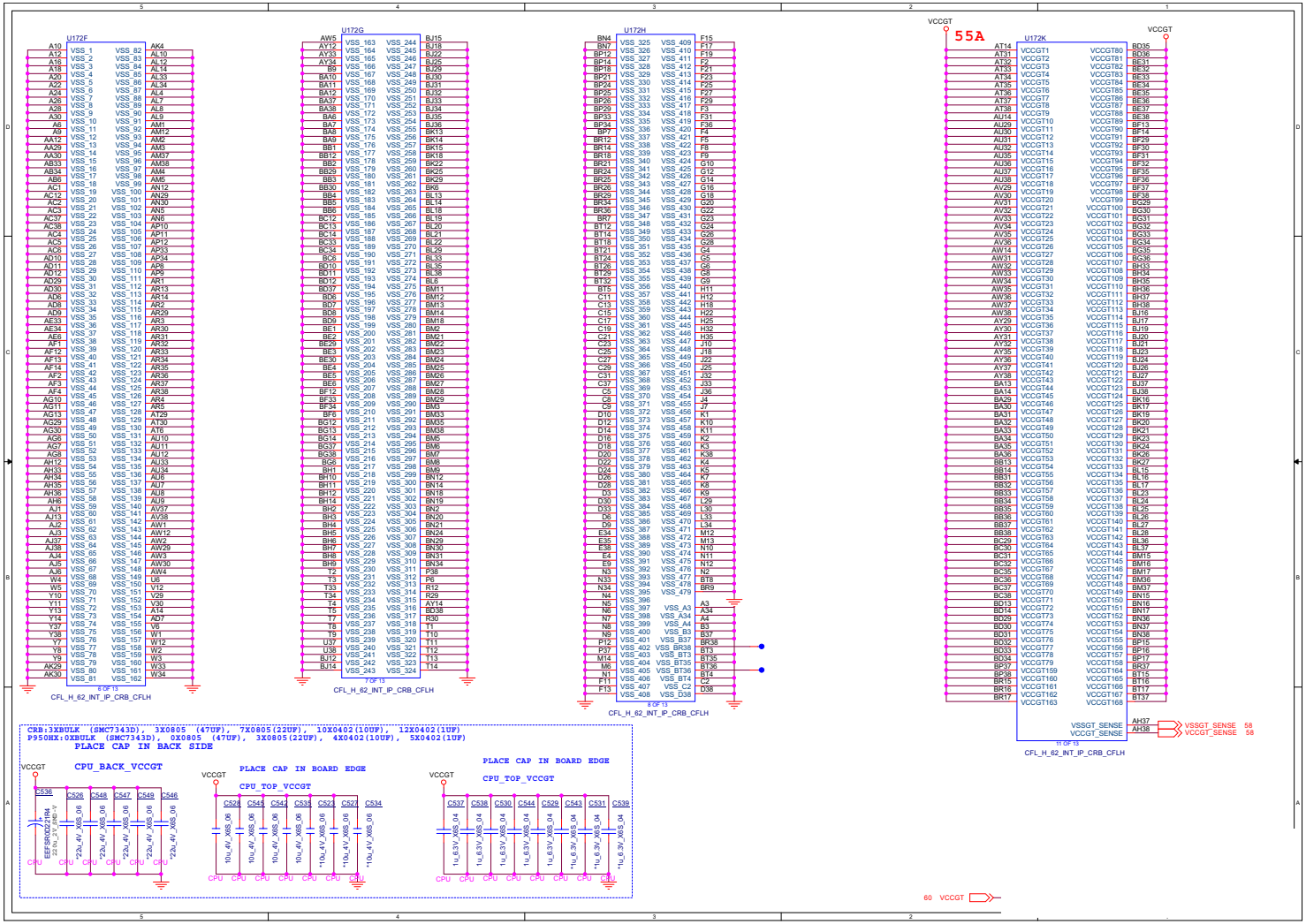

Sheet 8 of 72
Processor 7/7

DDR4 CHA SO-DIMM_0

Sheet 9 of 72
DDR4 CHA SO-DIMM_0

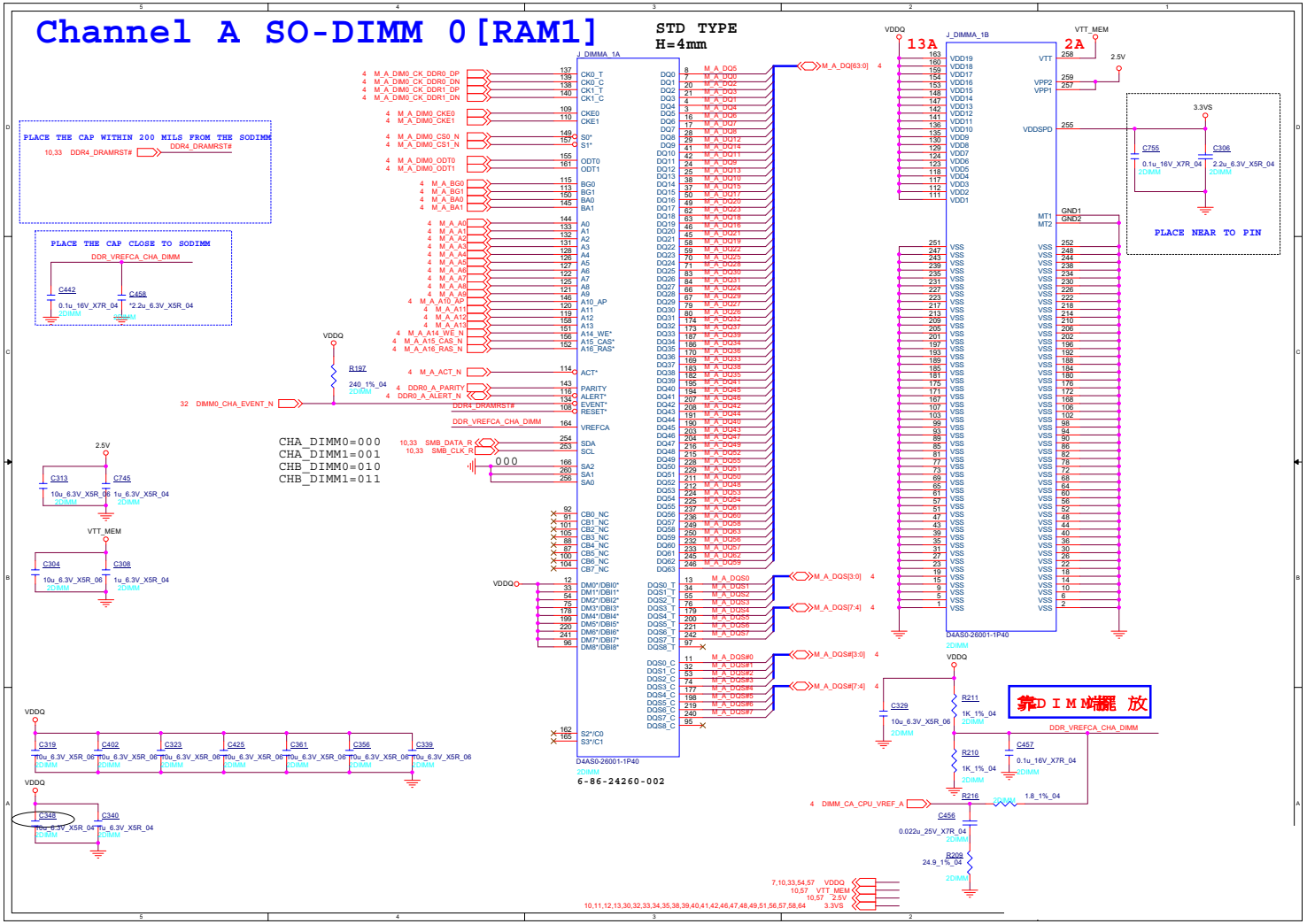

DDR4 CHB SO-DIMM_0

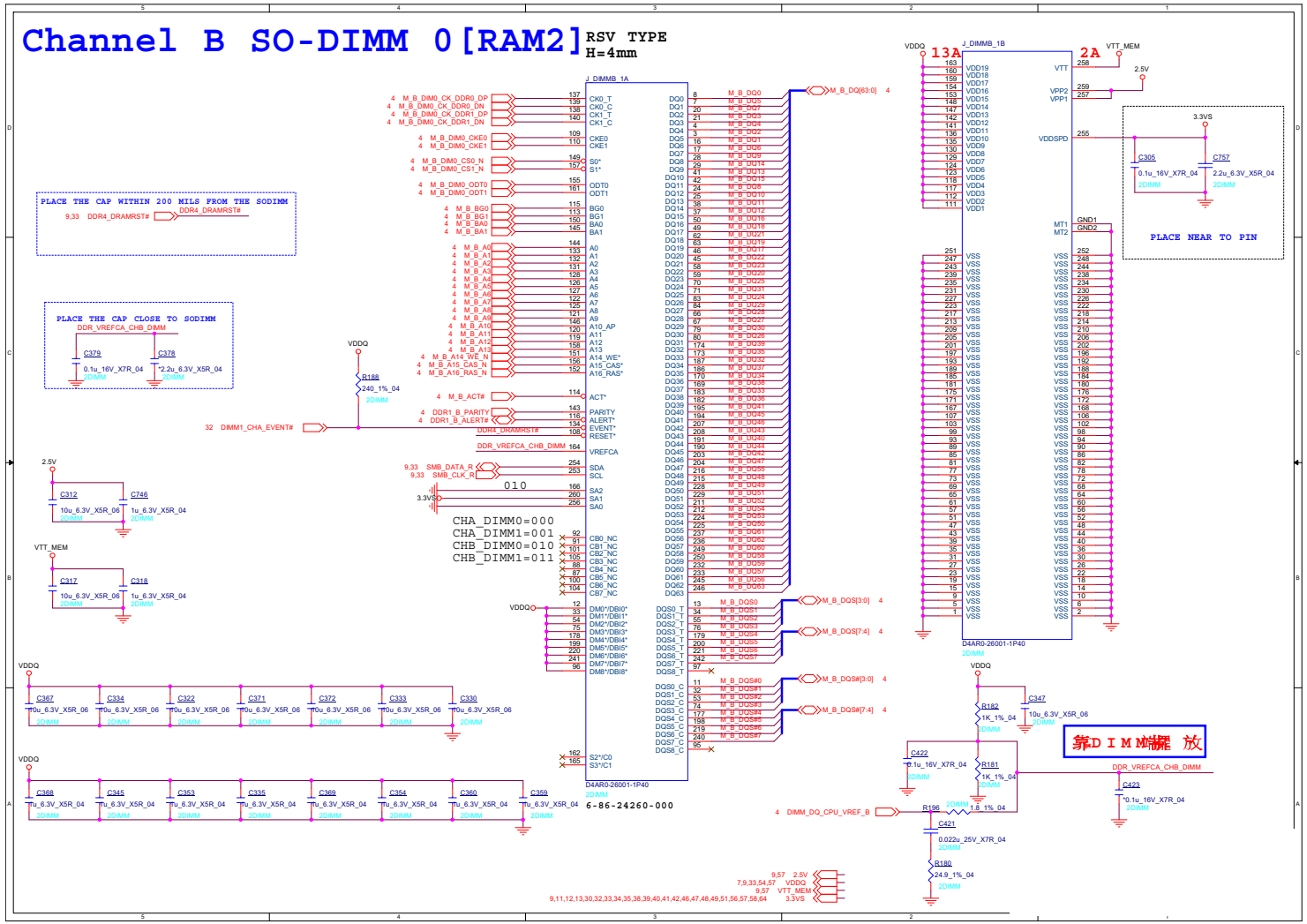

Sheet 10 of 72
DDR4 CHB SO-DIMM_0

Panel, Inverter

Sheet 11 of 72
Panel, Inverter

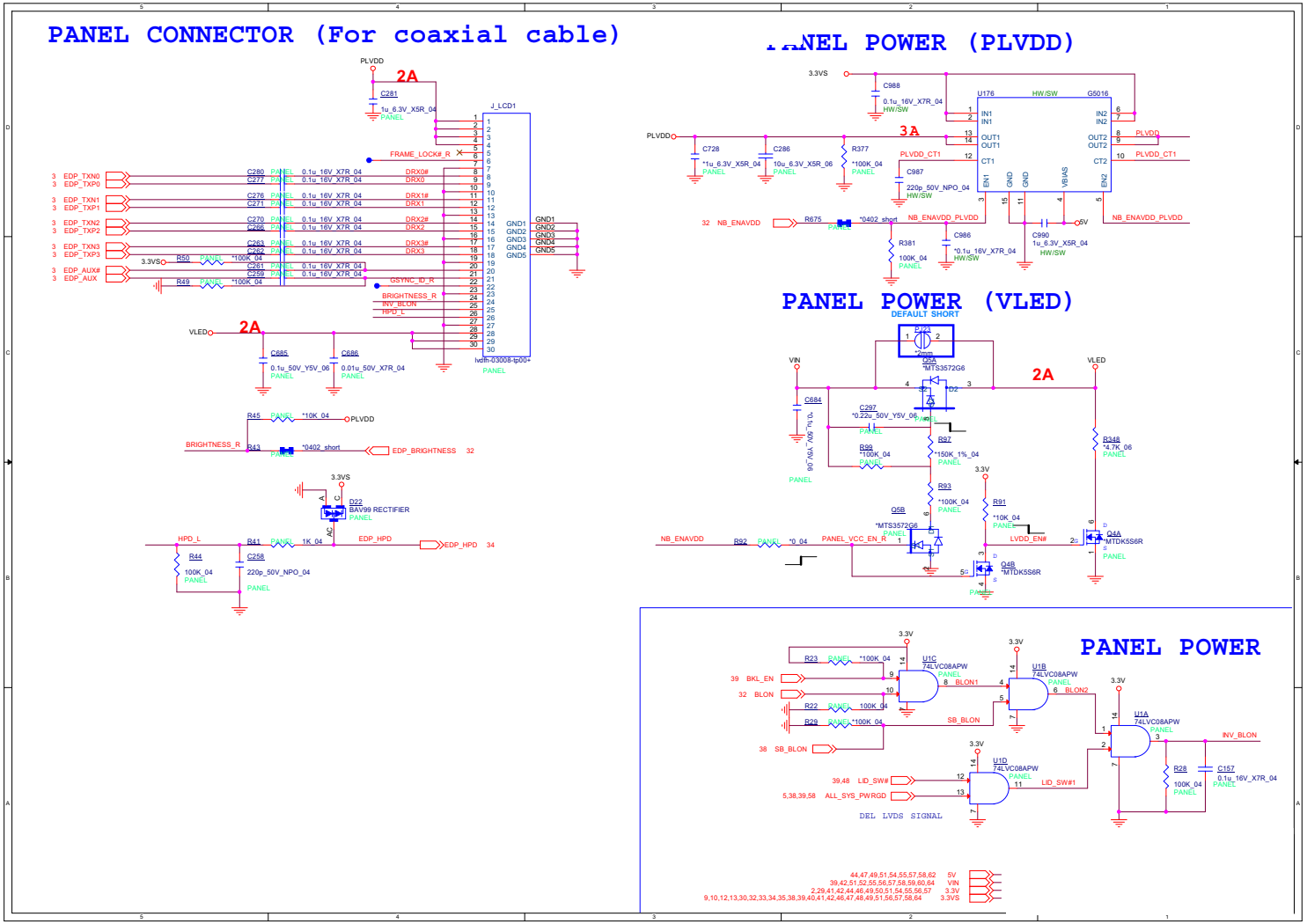

Mini DP Port

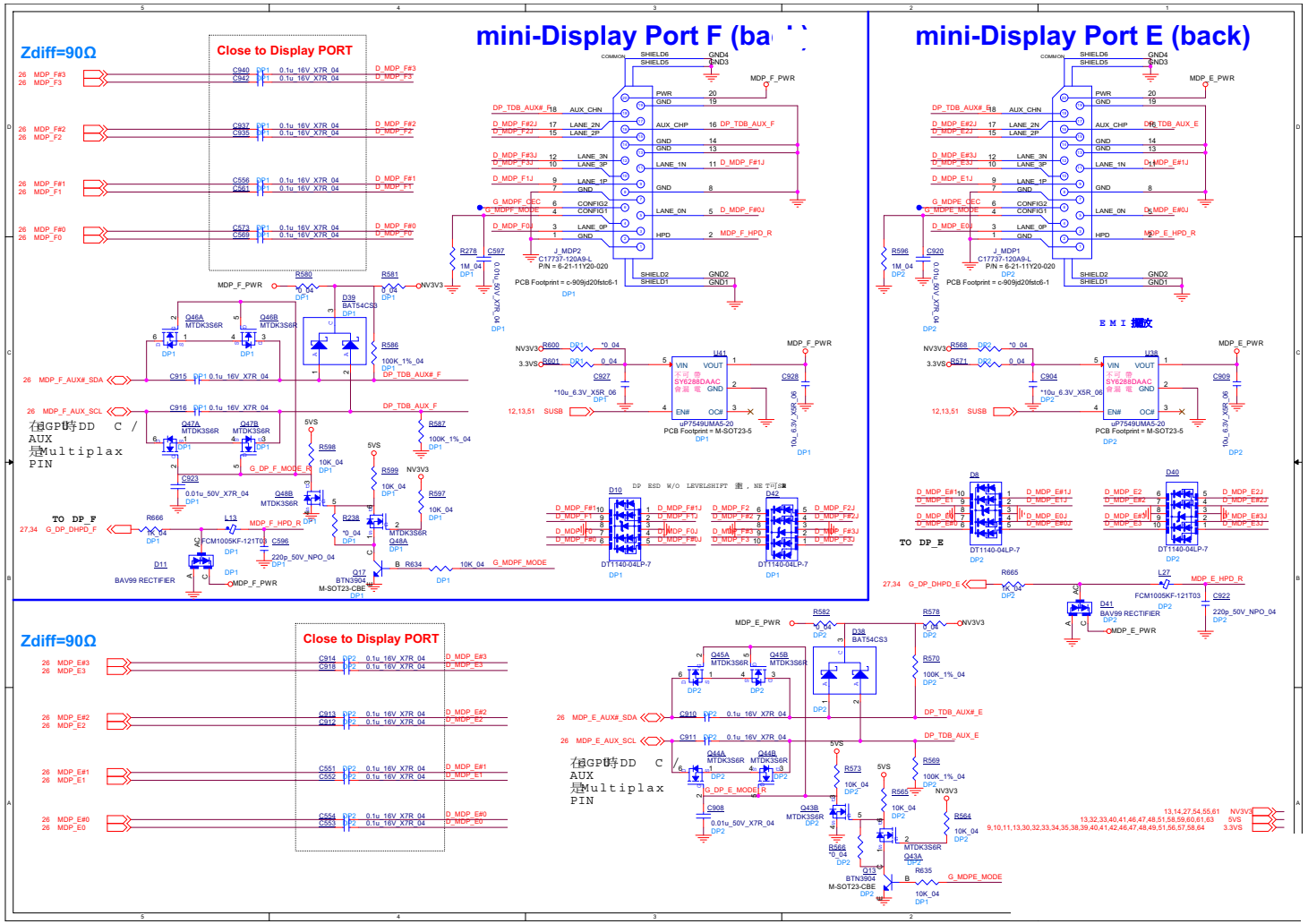

Sheet 12 of 72
Mini DP Port

HDMI Connector

Sheet 13 of 72
HDMI Connector

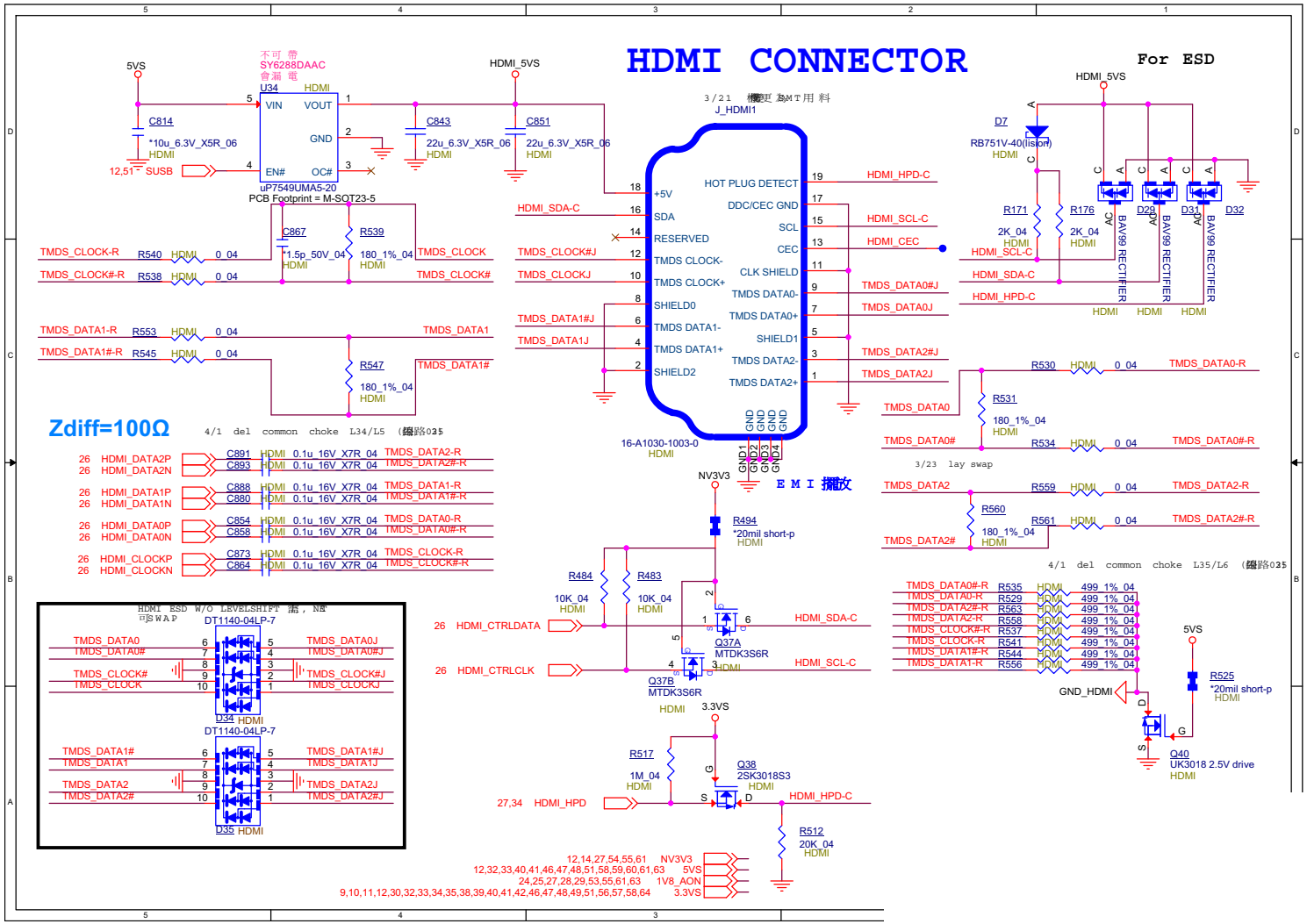

VGA PCI Express

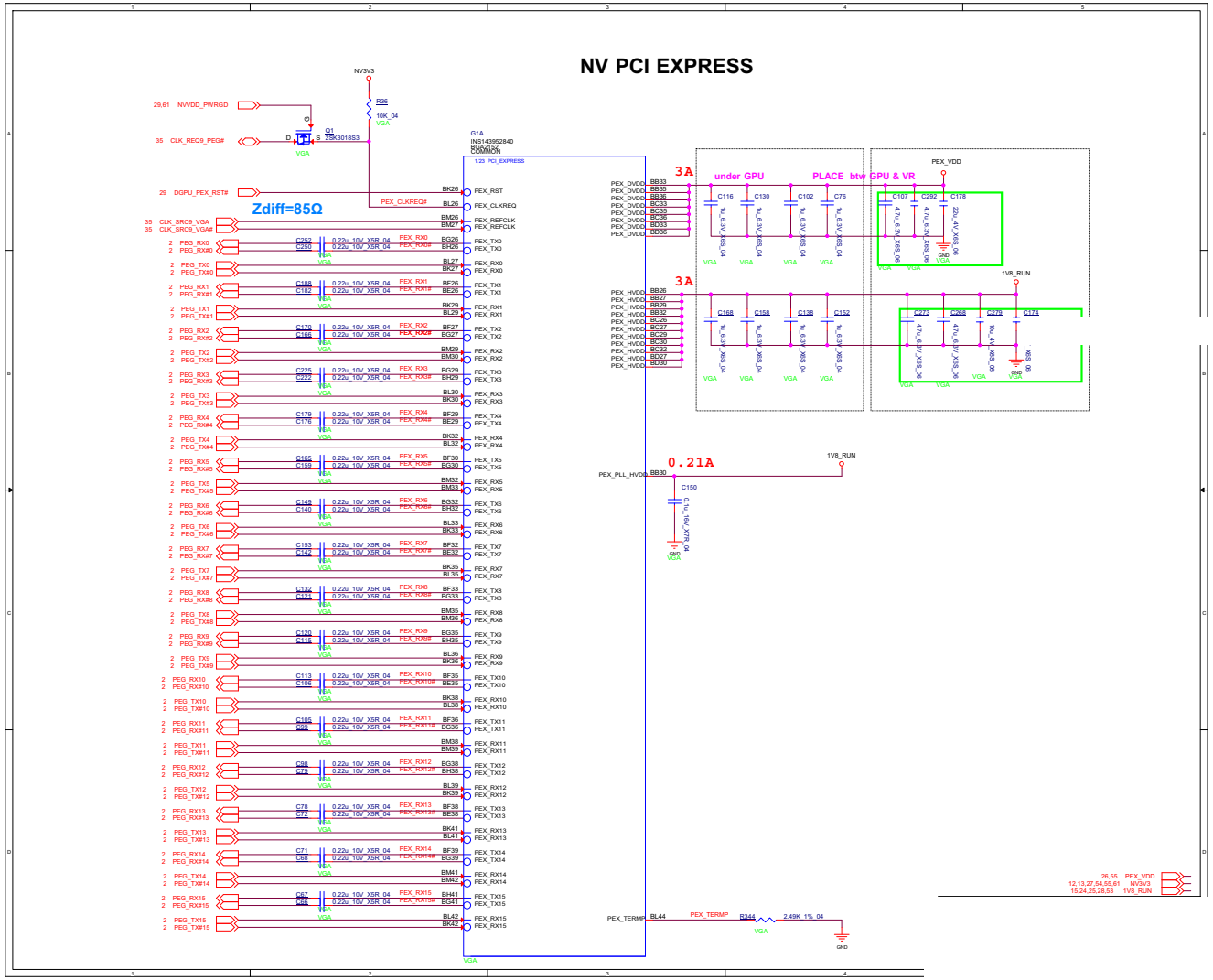

Sheet 14 of 72
VGA PCI Express

GPU Frame Buffer Partition

Sheet 15 of 72
GPU Frame Buffer Partition

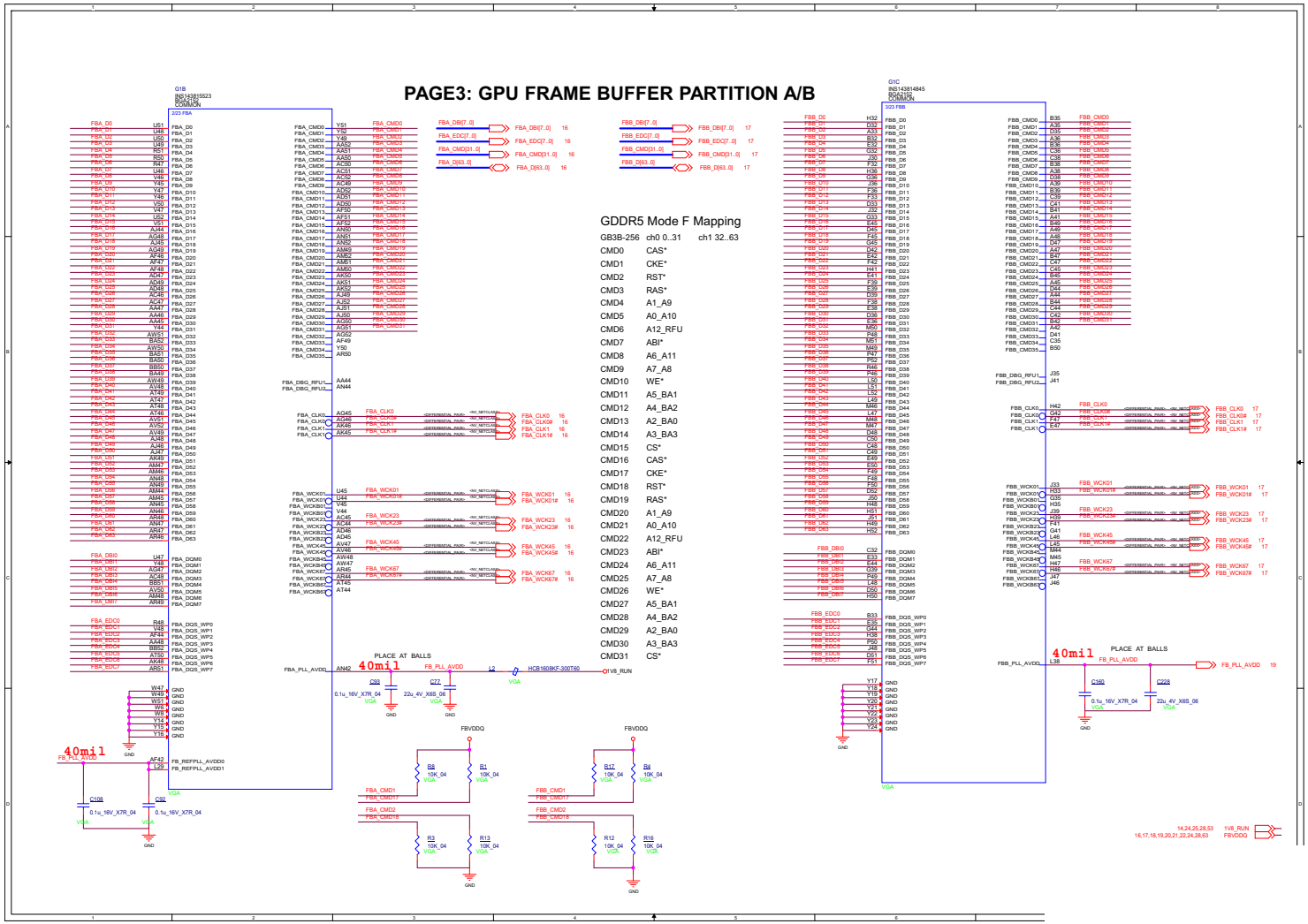

Frame Buffer Partition A

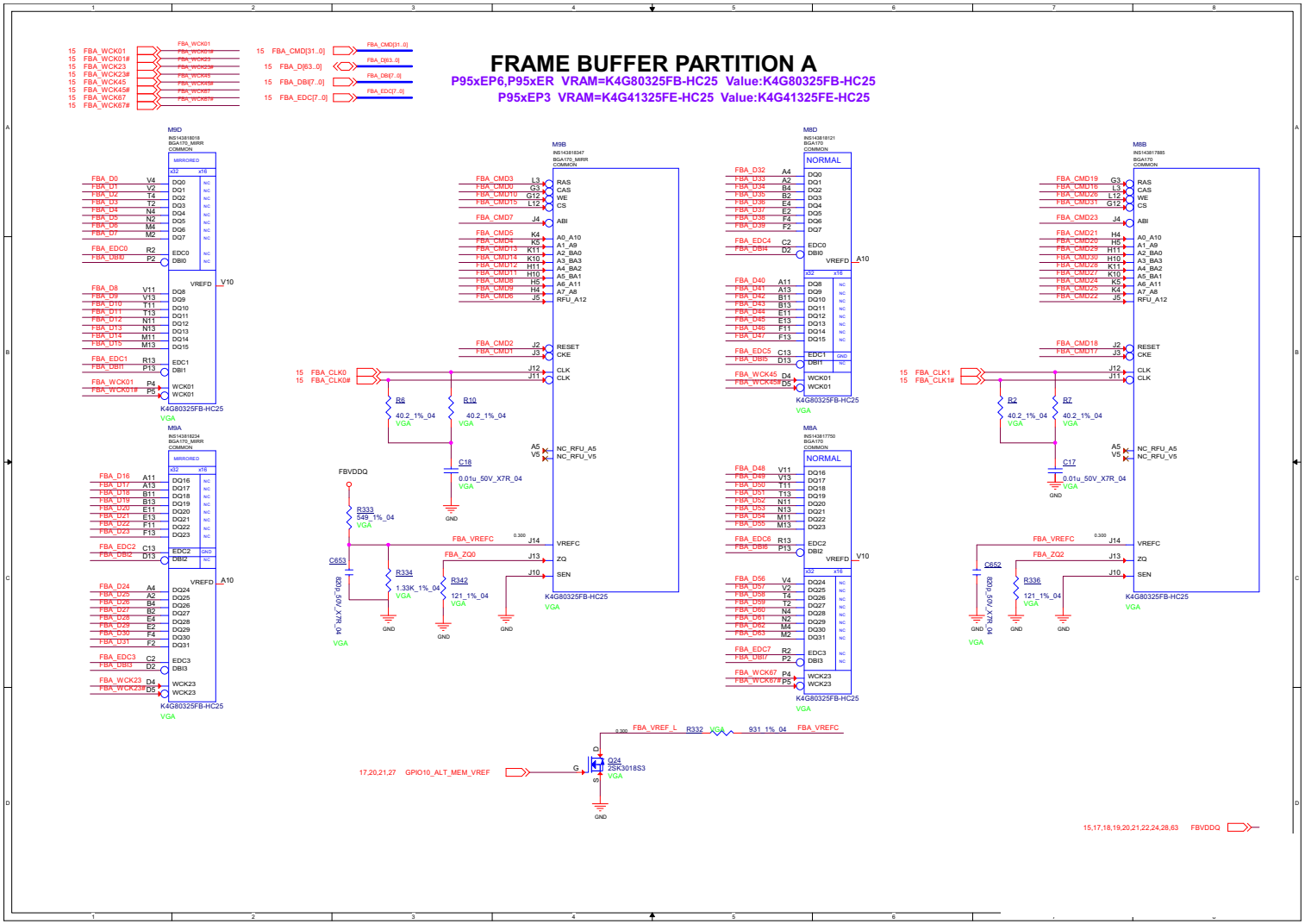

Sheet 16 of 72
Frame Buffer
Partition A

Frame Buffer Partition B

Sheet 17 of 72
Frame Buffer Partition B

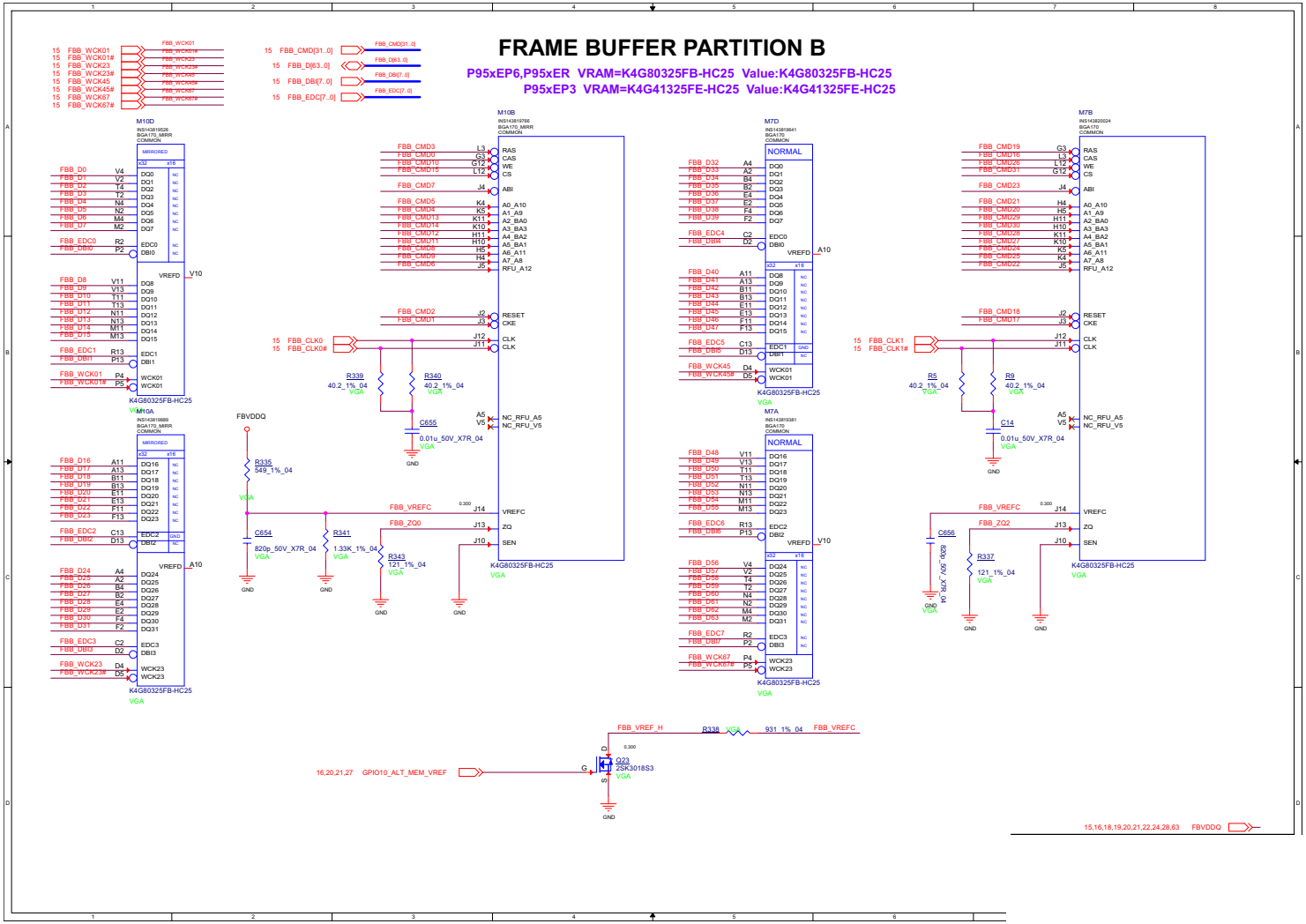

Frame Buffer Partition A_B

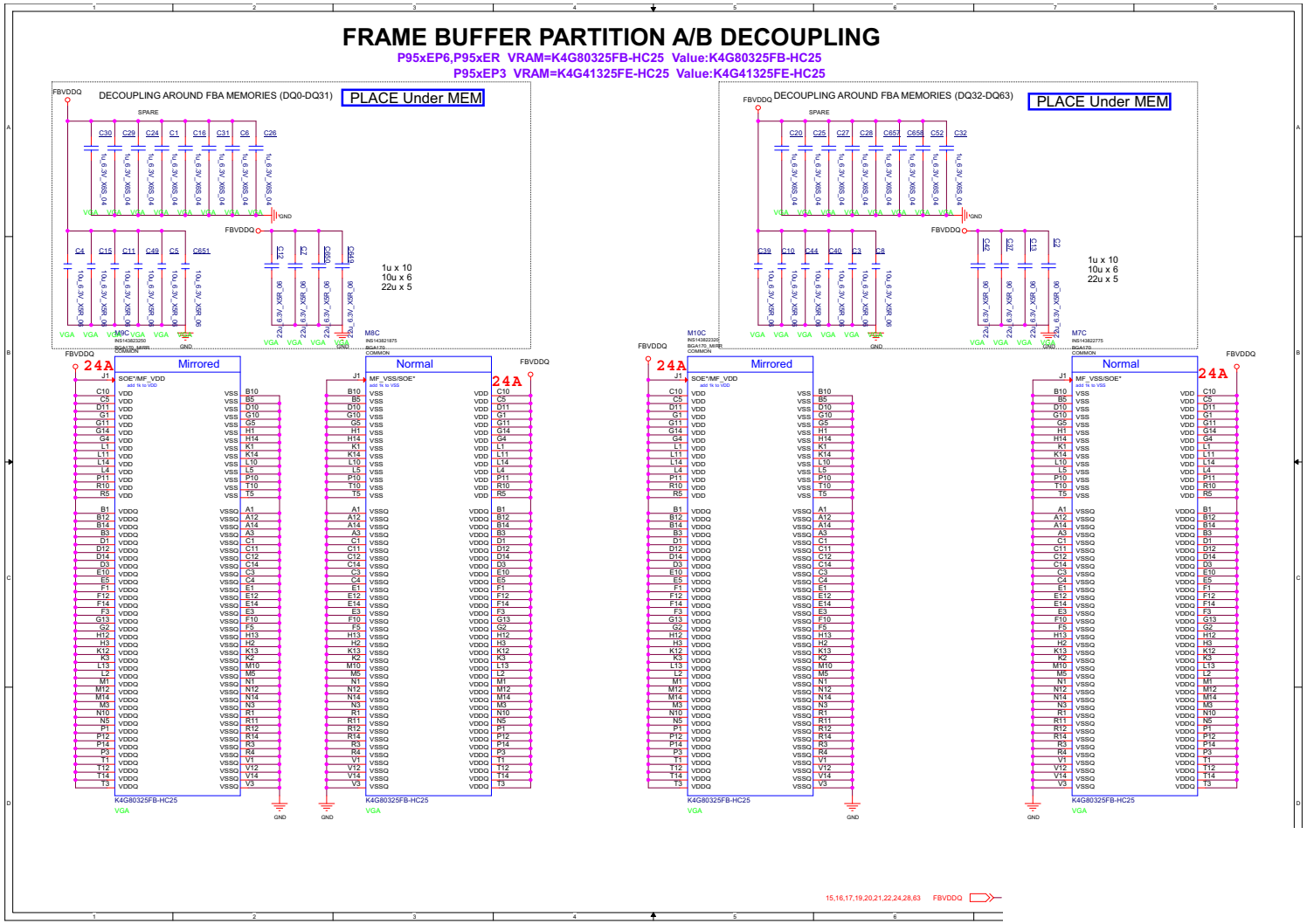

Sheet 18 of 72
Frame Buffer
Partition A_B

GPU Frame Buffer Partition

Sheet 19 of 72
GPU Frame Buffer Partition

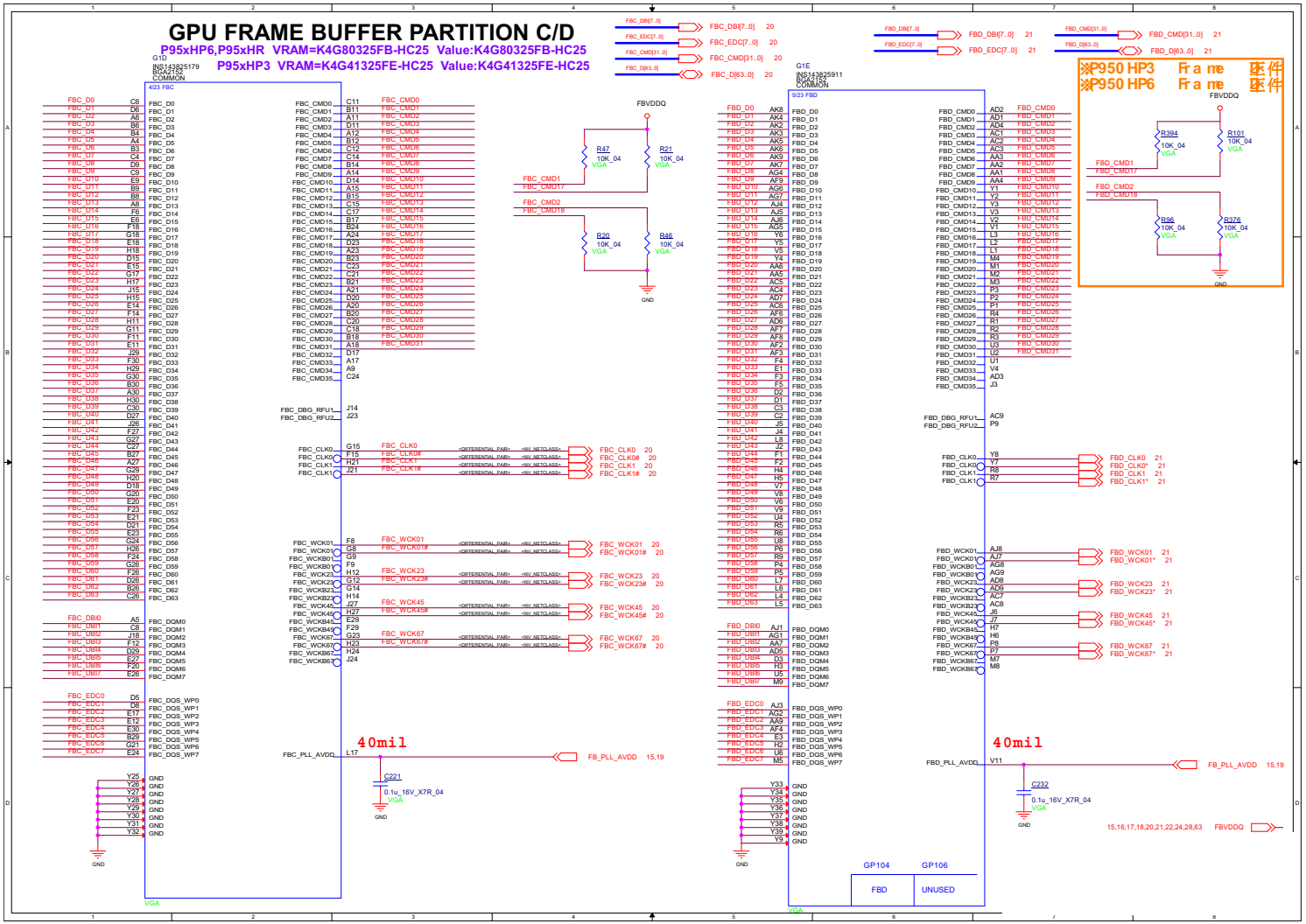

Frame Buffer Partition C

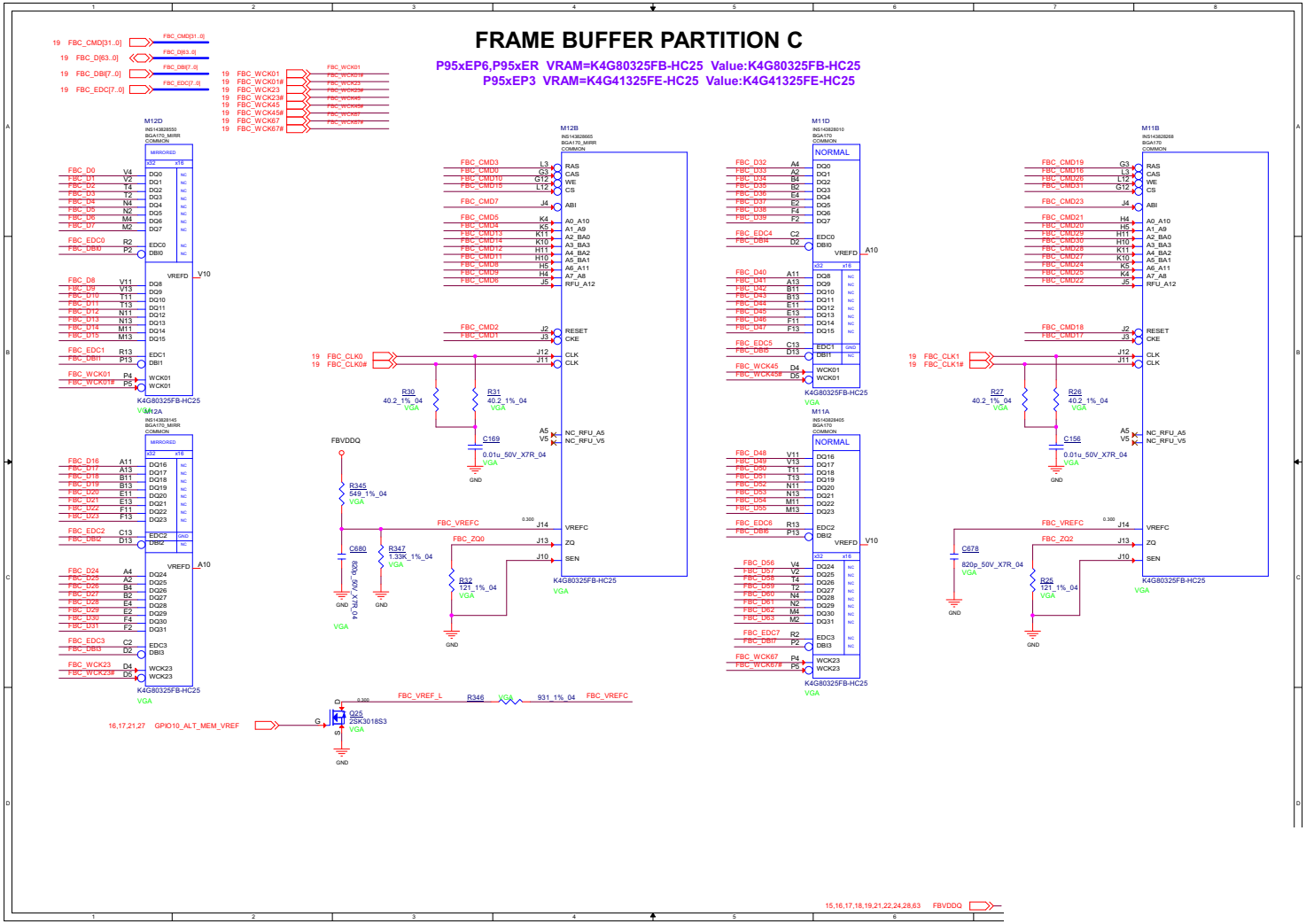

Sheet 20 of 72
Frame Buffer
Partition C

Frame Buffer Partition D

Sheet 21 of 72
Frame Buffer Partition D

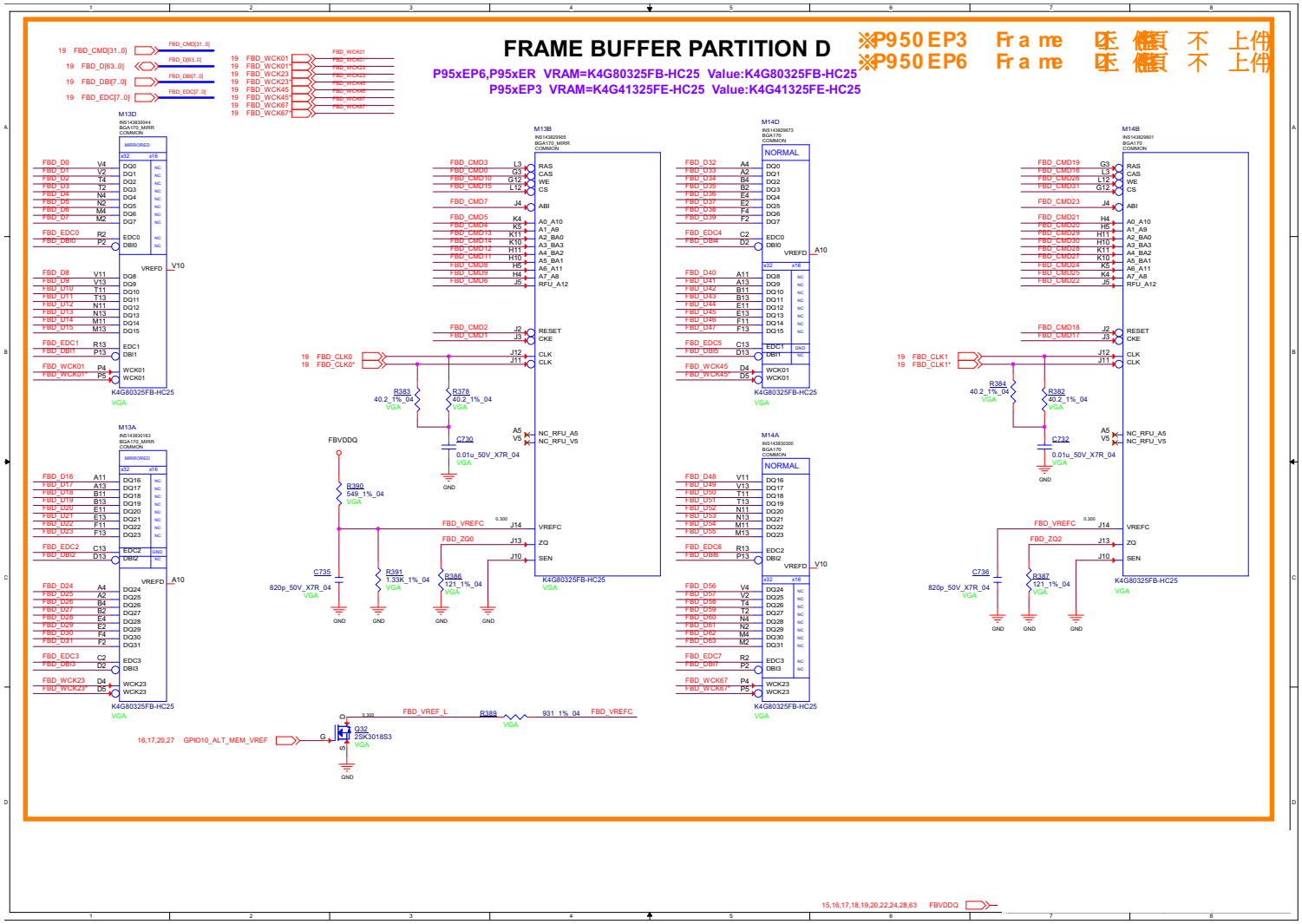

Frame Buffer Partition C_D

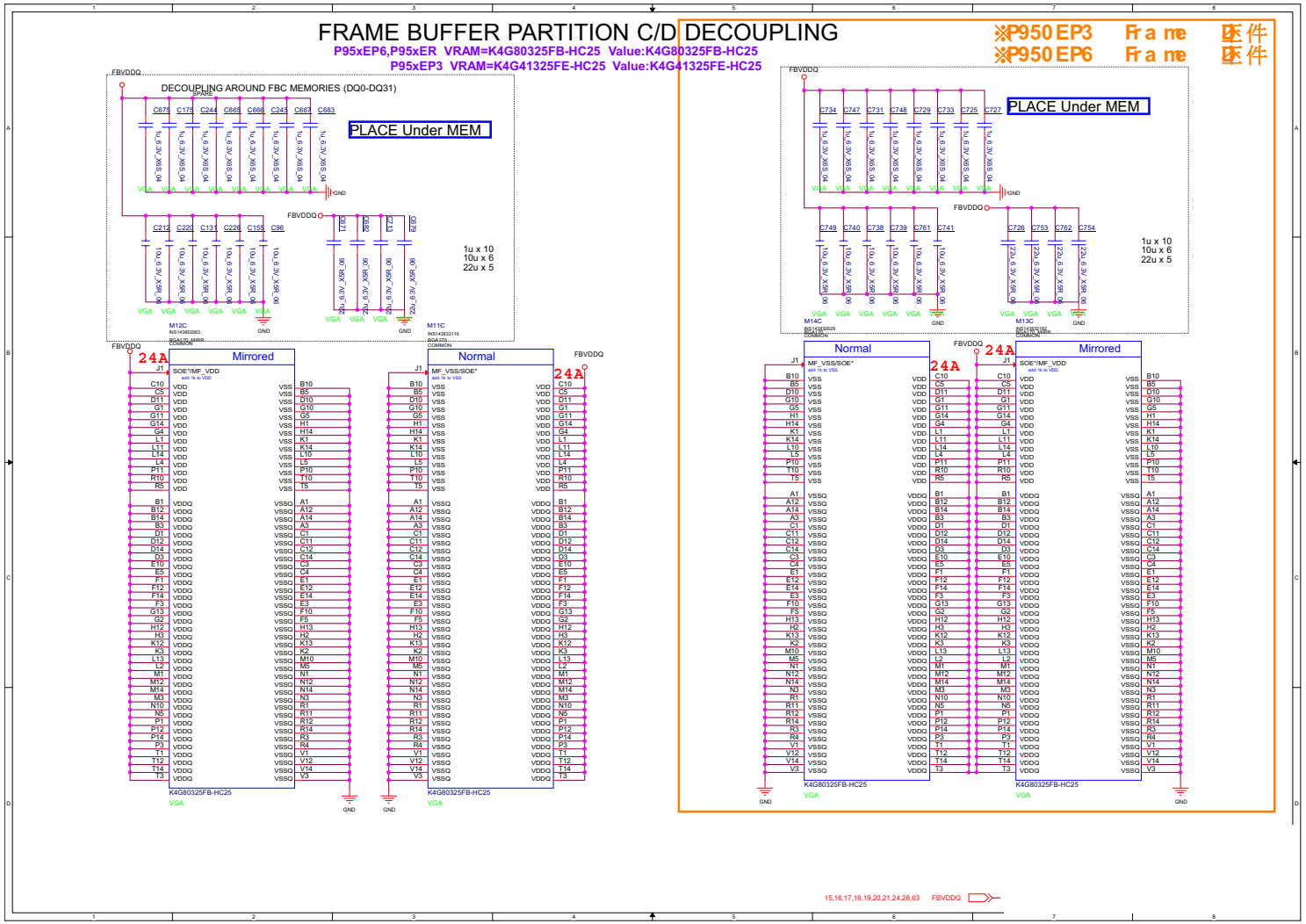

Sheet 22 of 72
Frame Buffer
Partition C_D

GPU Decoupling 1

Sheet 23 of 72
GPU Decoupling 1

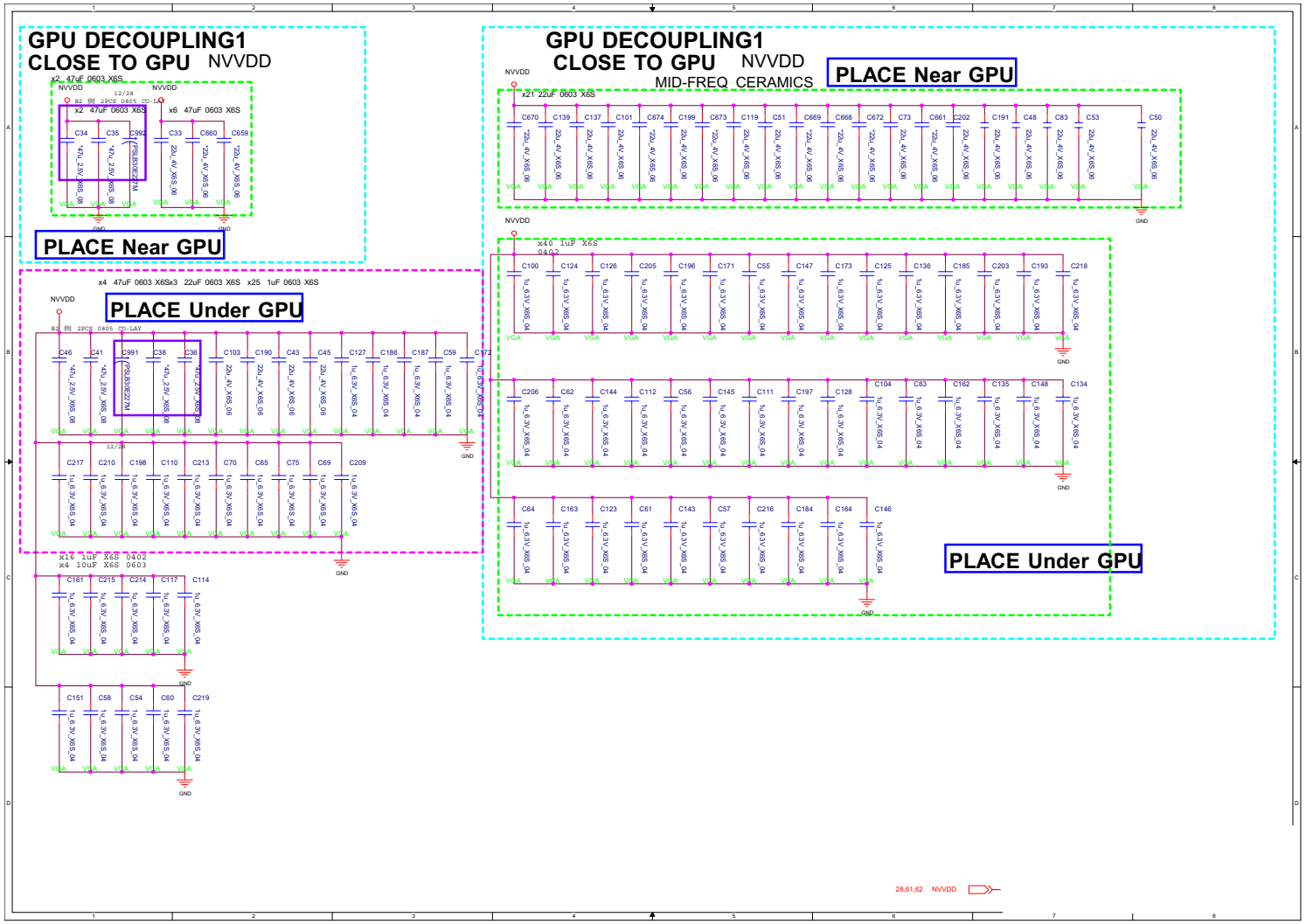

GPU Decoupling 2

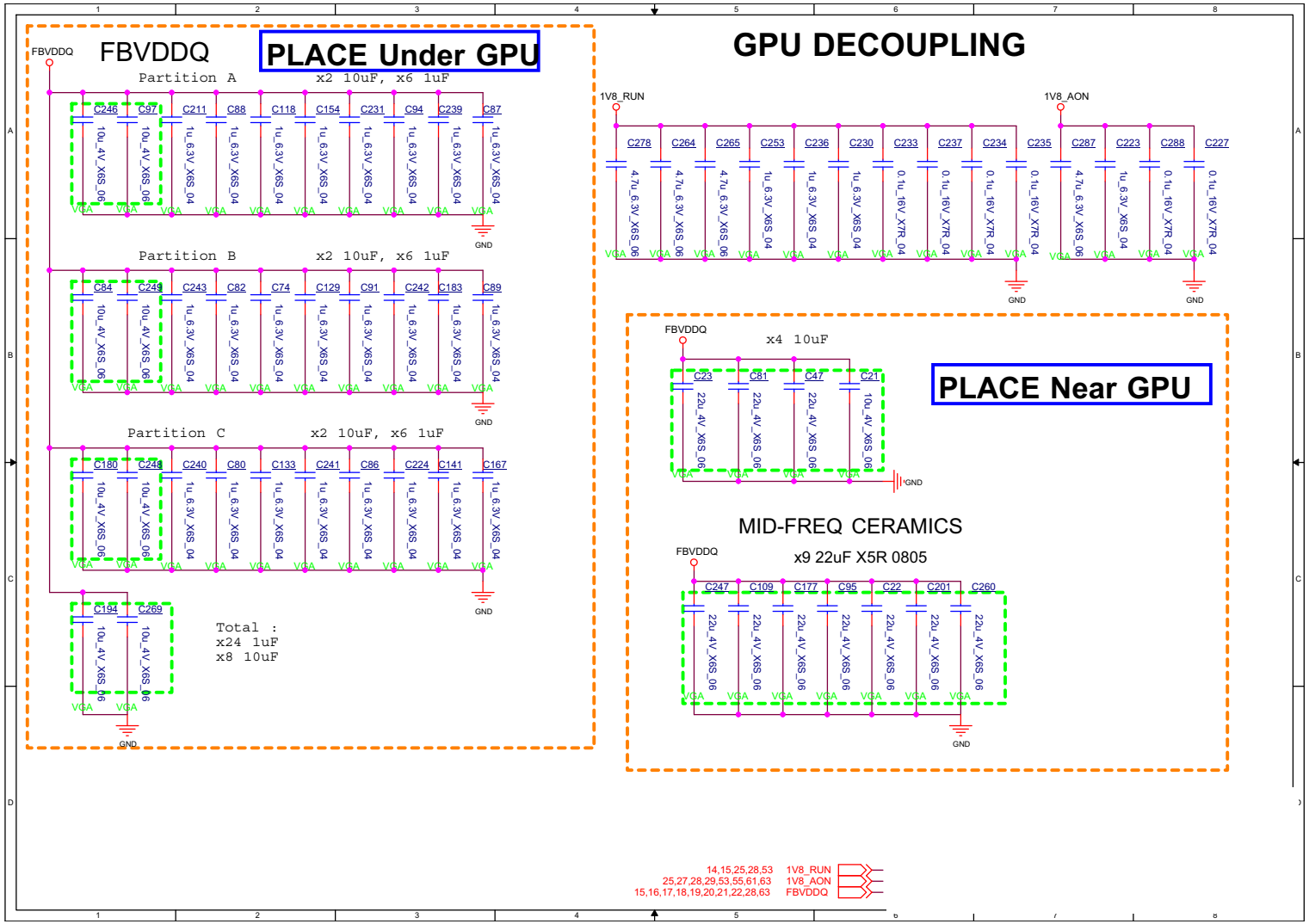

Sheet 24 of 72
GPU Decoupling 2

Straps and XTAL

Sheet 25 of 72
Straps and XTAL

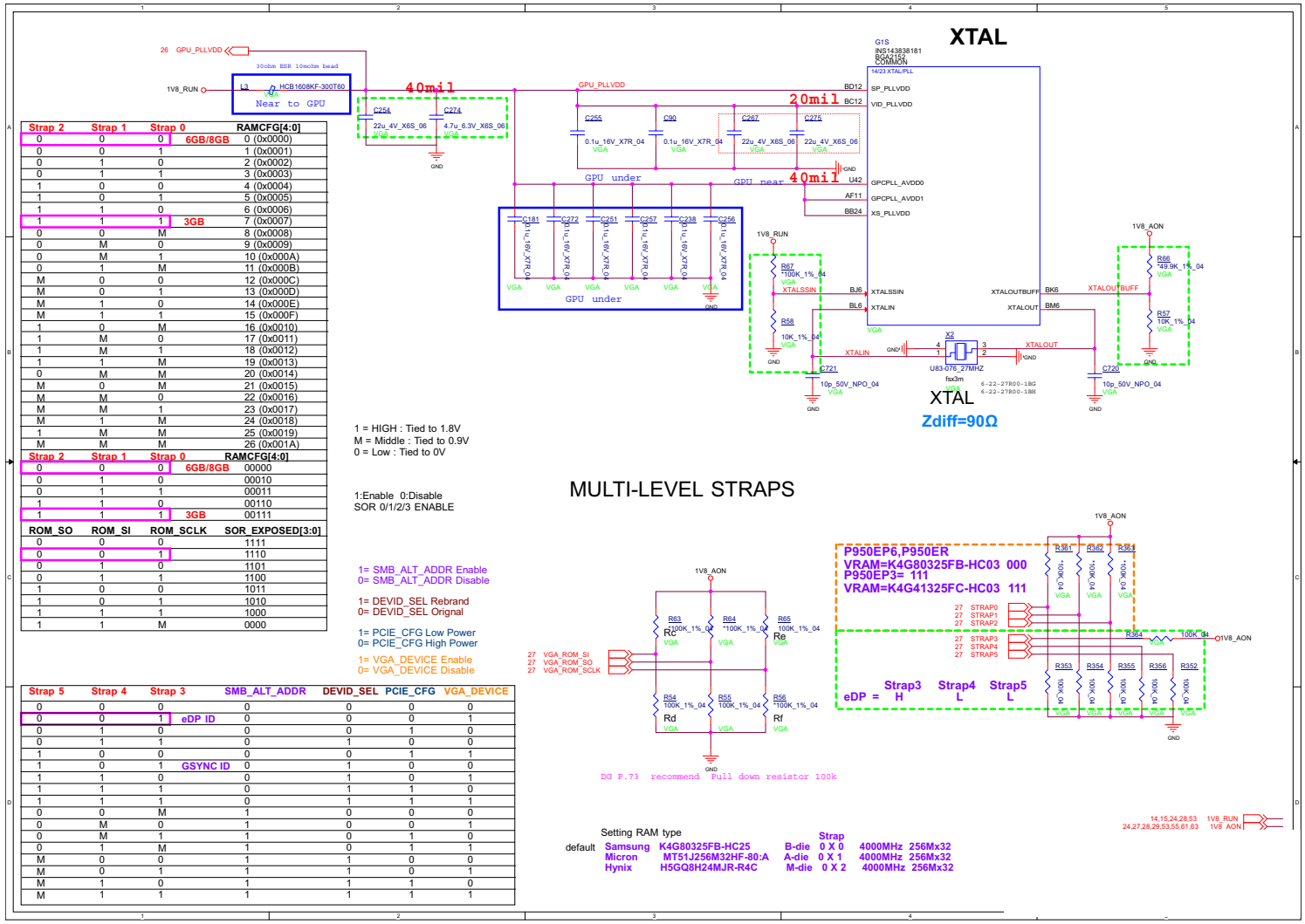

Strap 2	Strap 1	Strap 0		RAMCFG[4:0]
0	0	0	6GB/8GB	0 (0x0000)
0	0	1		1 (0x0001)
0	1	0		2 (0x0002)
0	1	1		3 (0x0003)
1	0	0		4 (0x0004)
1	0	1		5 (0x0005)
1	1	0		6 (0x0006)
1	1	1	3GB	7 (0x0007)
0	0	M		8 (0x0008)
0	M	0		9 (0x0009)
0	M	1		10 (0x000A)
0	1	M		11 (0x000B)
M	0	0		12 (0x000C)
M	0	1		13 (0x000D)
M	1	0		14 (0x000E)
M	1	1		15 (0x000F)
1	0	M		16 (0x0010)
1	M	0		17 (0x0011)
1	M	1		18 (0x0012)
1	1	M		19 (0x0013)
0	M	M		20 (0x0014)
M	0	M		21 (0x0015)
M	M	0		22 (0x0016)
M	M	1		23 (0x0017)
M	1	M		24 (0x0018)
1	M	M		25 (0x0019)
M	M	M		26 (0x001A)

Strap 2	Strap 1	Strap 0		RAMCFG[4:0]
0	0	0	6GB/8GB	00000
0	1	0		00010
0	1	1		00011
1	1	0		00110
1	1	1	3GB	00111

ROM_SO	ROM_SI	ROM_SCLK	SOR_EXPOSED[3:0]
0	0	0	1111
0	0	1	1110
0	1	0	1101
0	1	1	1100
1	0	0	1011
1	0	1	1010
1	1	1	1000
1	1	M	0000

Strap 5	Strap 4	Strap 3		SMB_ALT_ADDR	DEVID_SEL	PCIE_CFG	VGA_DEVICE
0	0	0		0	0	0	0
0	0	1	eDP ID	0	0	0	1
0	1	0		0	0	1	0
0	1	1		0	1	0	0
1	0	0		0	0	1	1
1	0	1	GSYNC ID	0	1	0	0
1	1	0		0	1	0	1
1	1	1		0	1	1	0
1	1	1		0	1	1	1
0	0	M		1	0	0	0
0	M	0		1	0	0	1
0	M	1		1	0	1	0
0	1	M		1	0	1	1
M	0	0		1	1	0	0
M	0	1		1	1	0	1
M	1	0		1	1	1	0
M	1	1		1	1	1	1

IFP I/O Interface

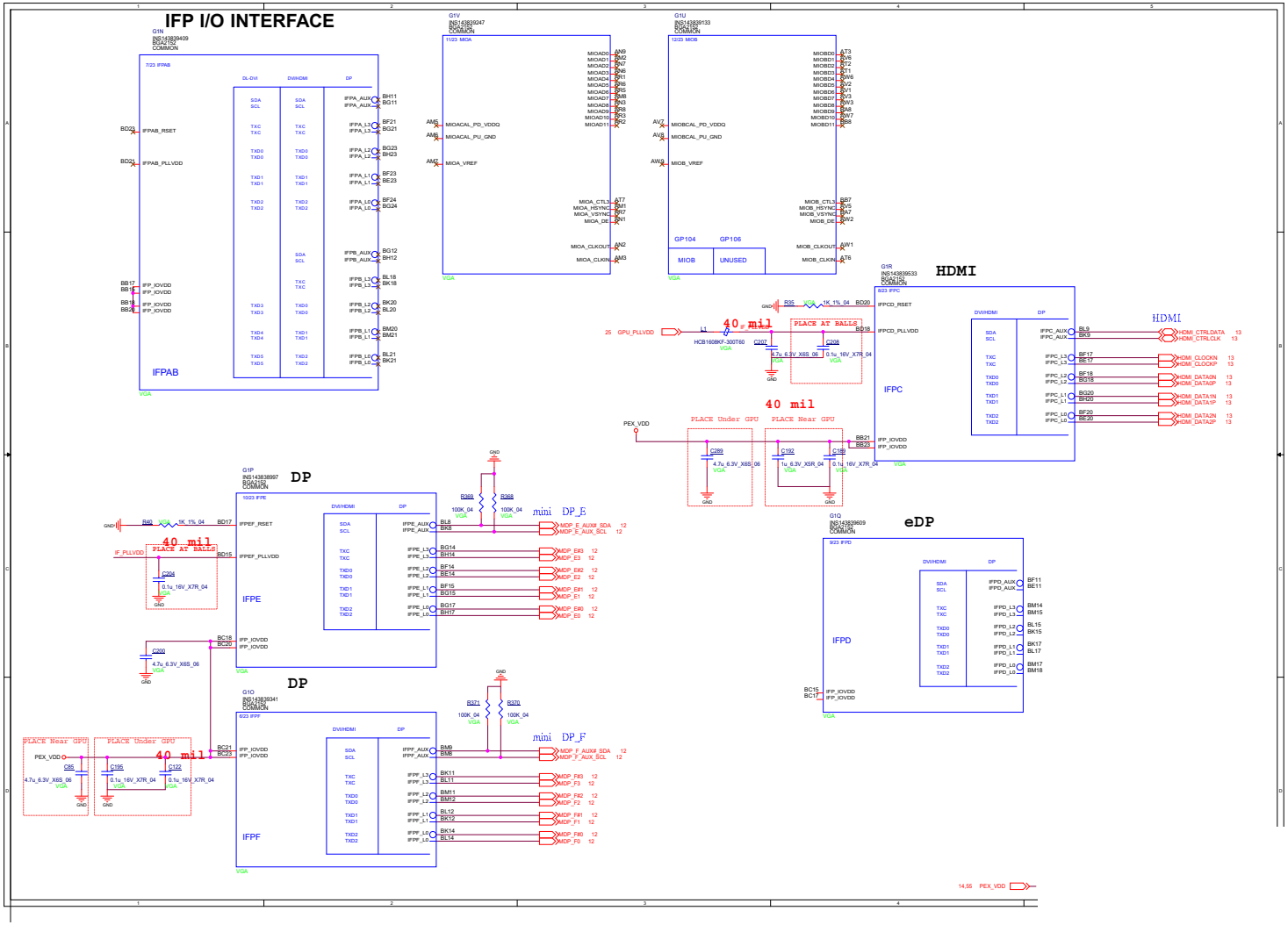

Sheet 26 of 72
IFP I/O Interface

Misc - GPIO, I2C and ROM

Sheet 27 of 72
Misc - GPIO, I2C and ROM

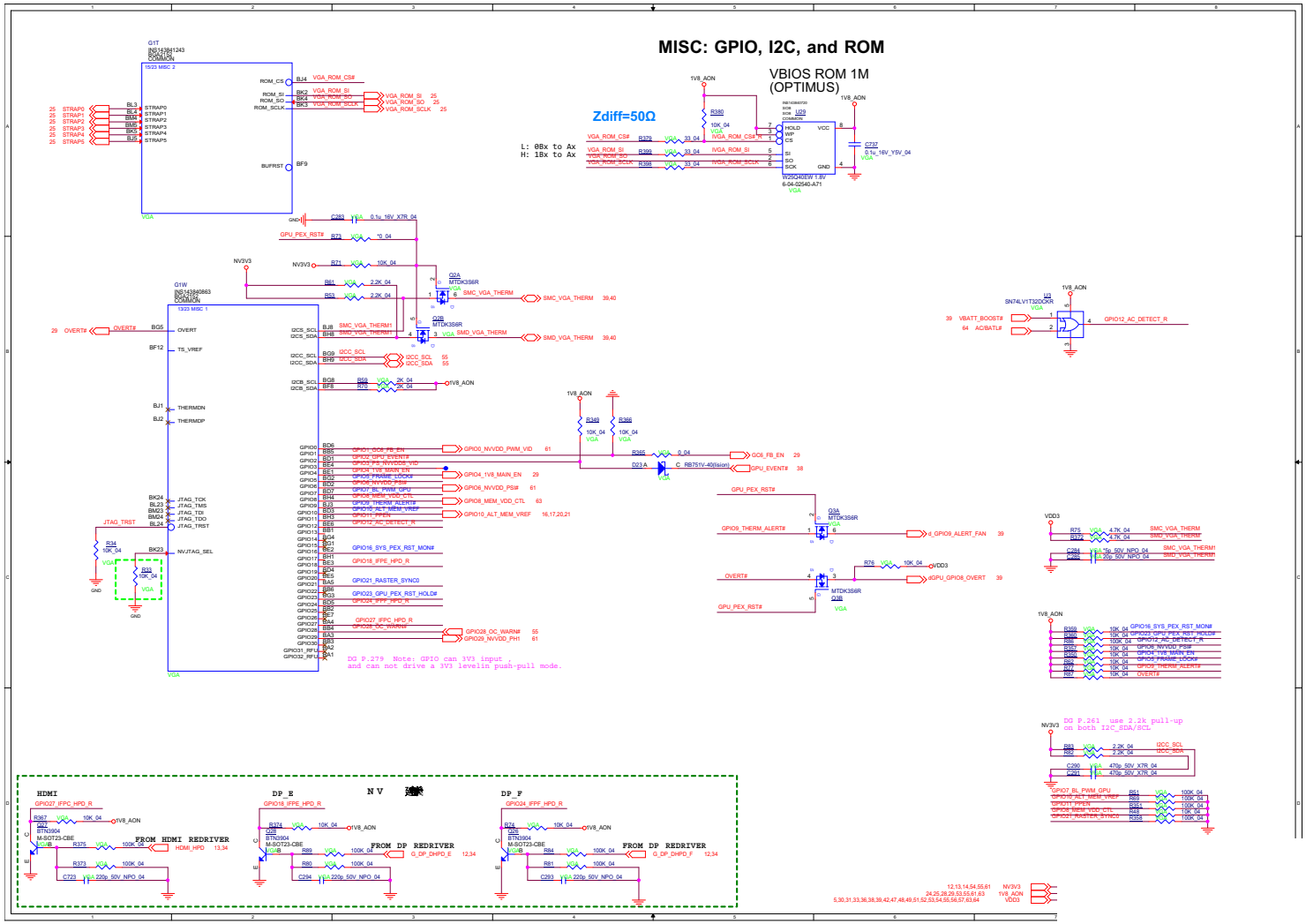

GPU NVVDD, FBVDDQ

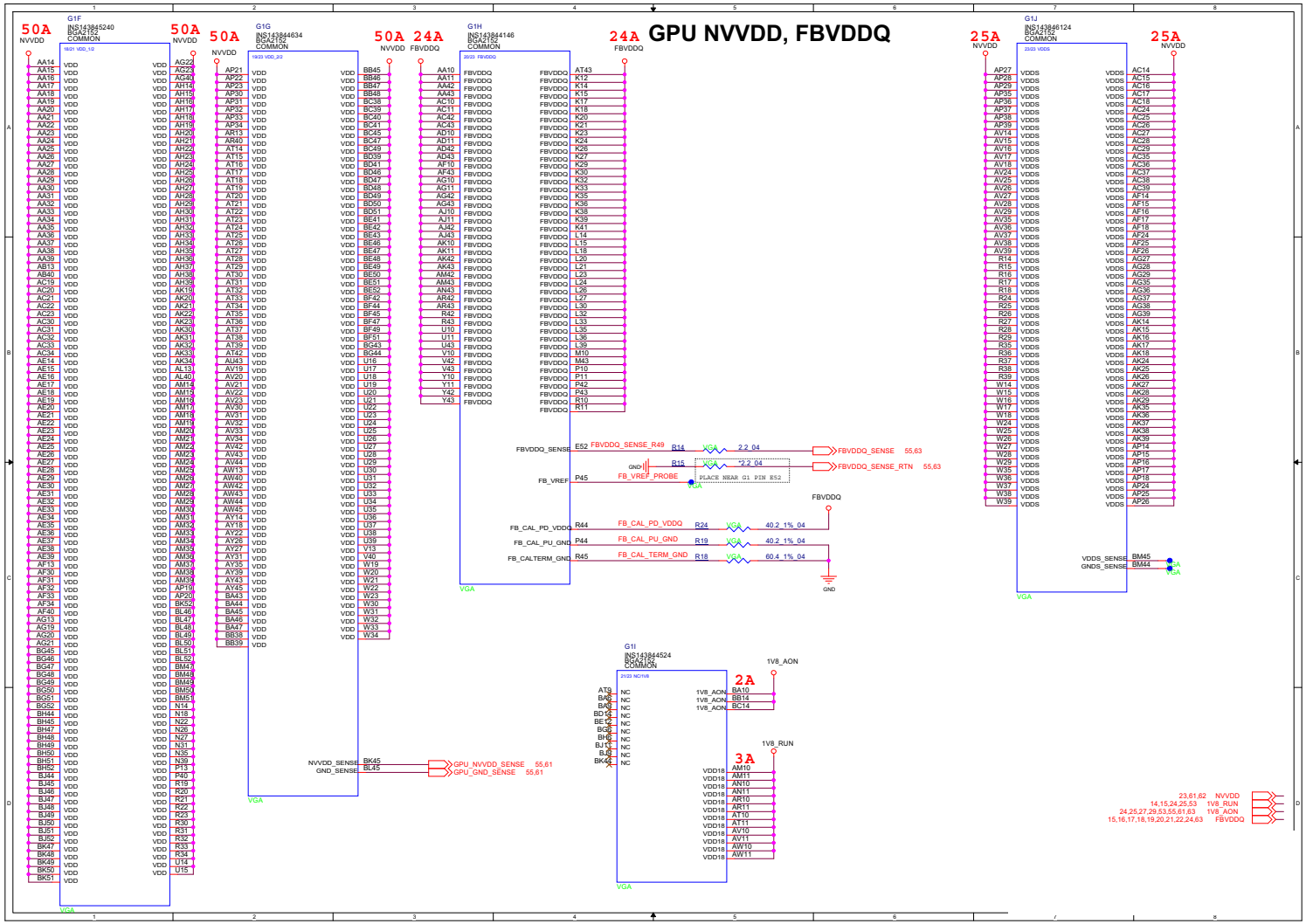

Sheet 28 of 72
GPU NVVDD, FBVDDQ

GPU GND & Sequence

Sheet 29 of 72
GPU GND & Sequence

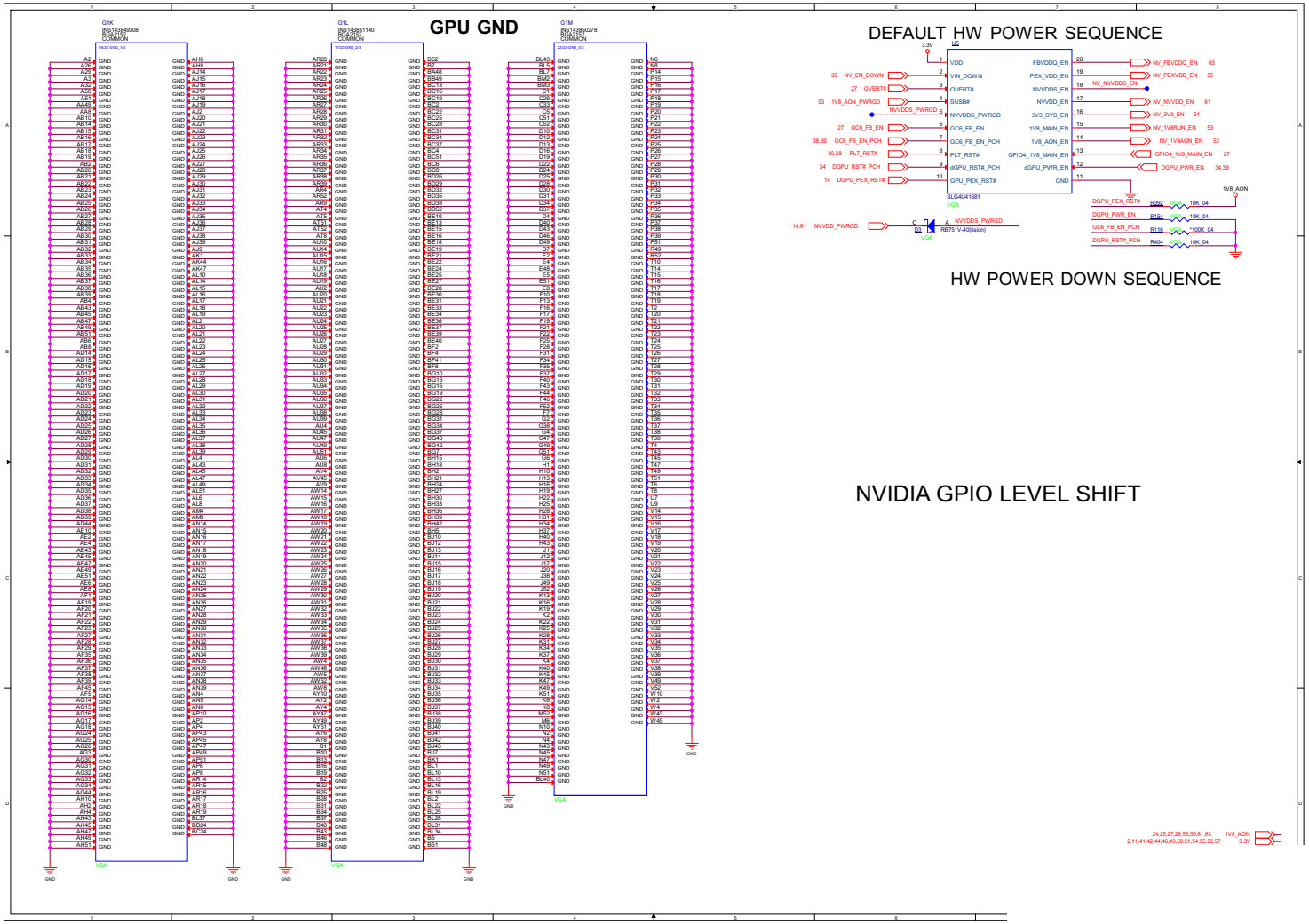

PCH 1/9

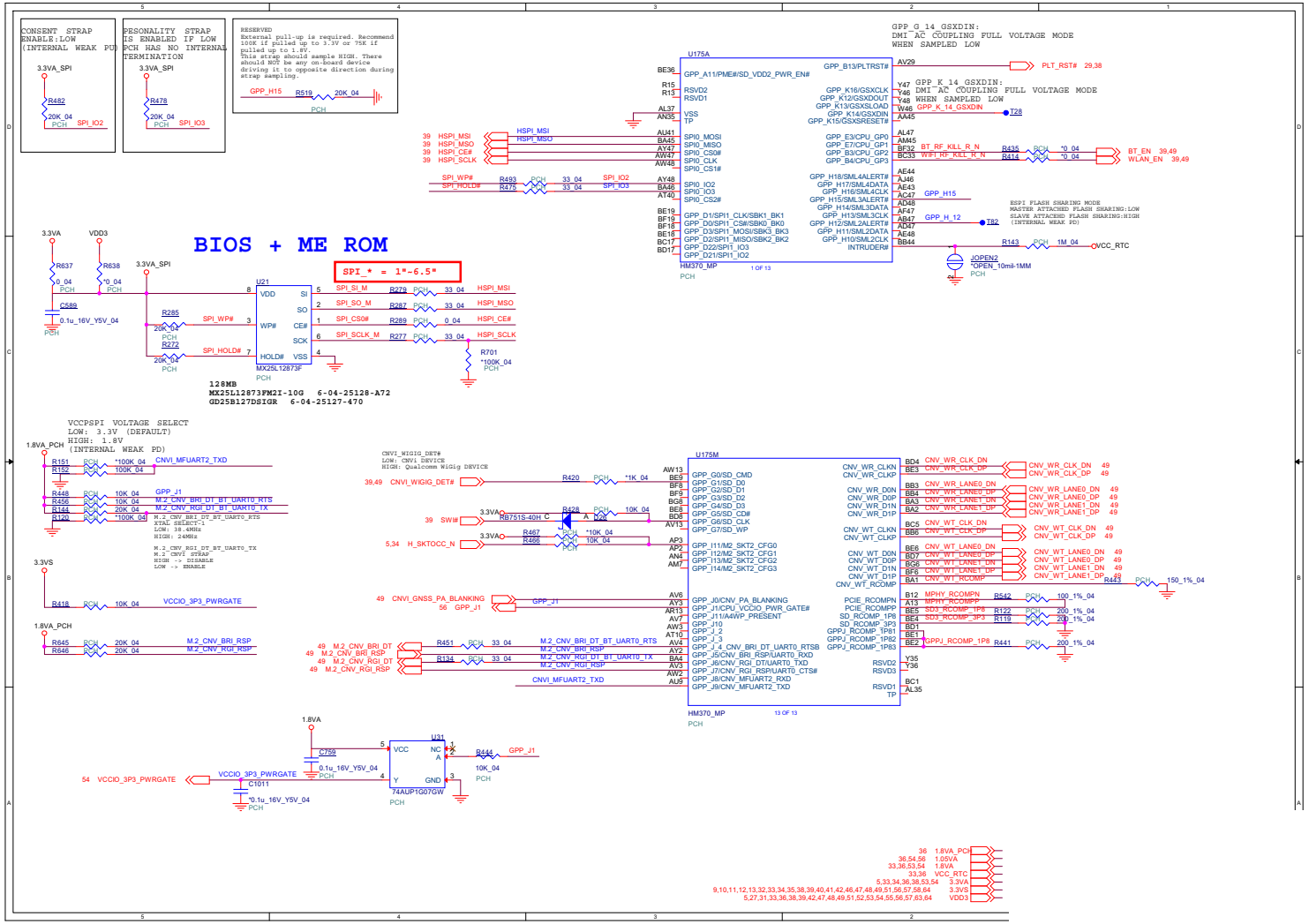

Sheet 30 of 72
PCH 1/9

PCH 2/9

Sheet 31 of 72
PCH 2/9

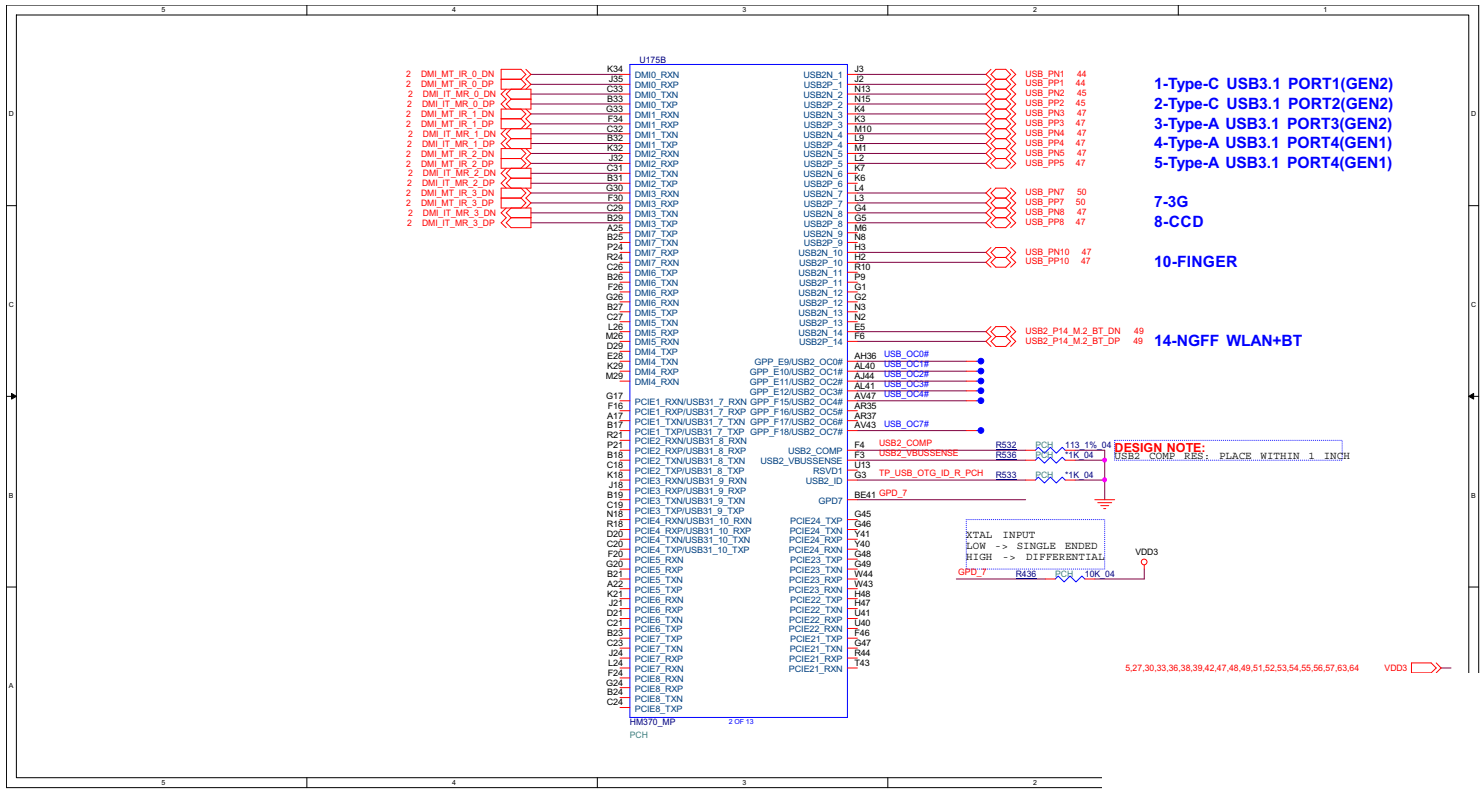

PCH 3/9

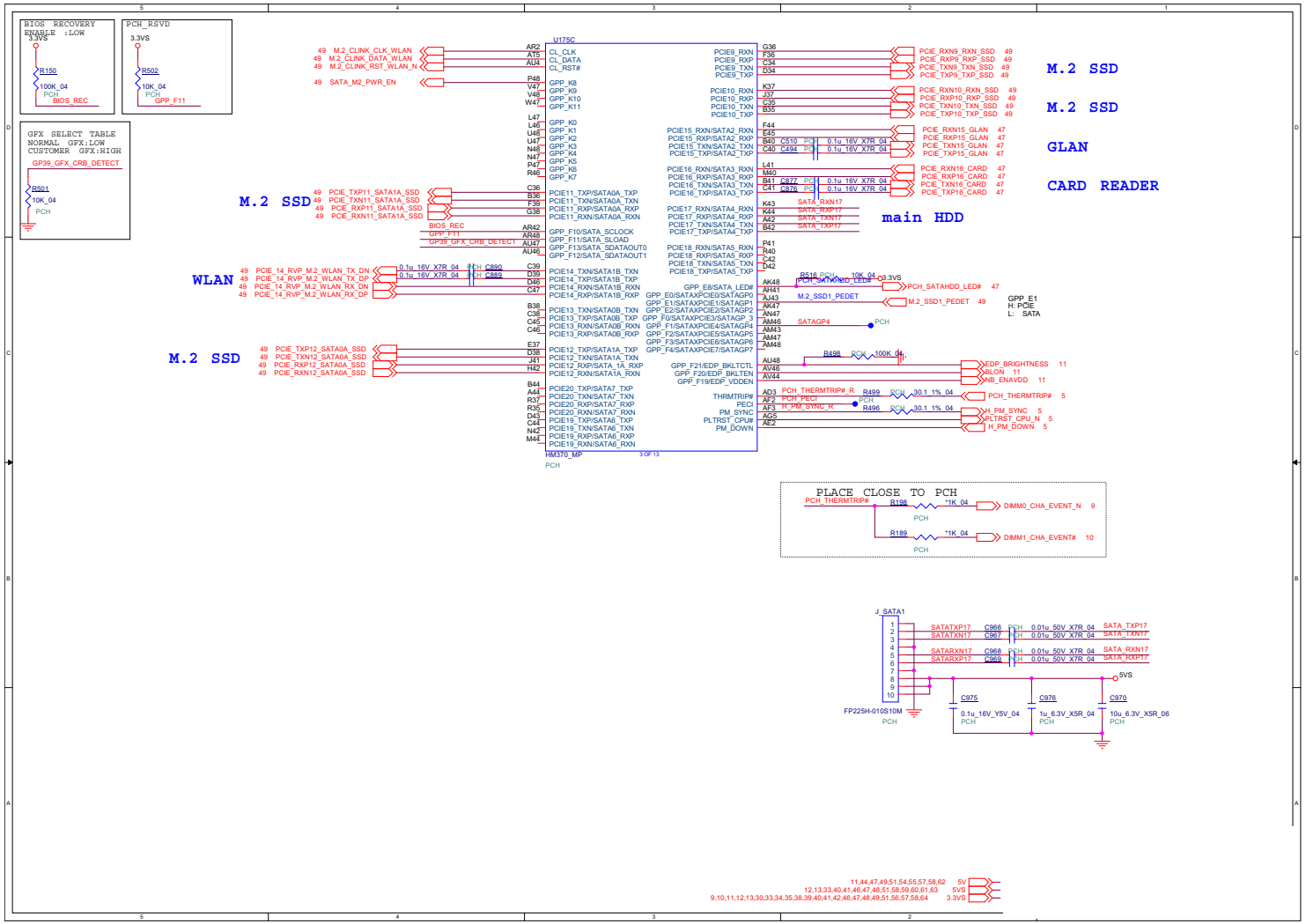

Sheet 32 of 72
PCH 3/9

PCH 4/9

Sheet 33 of 72
PCH 4/9

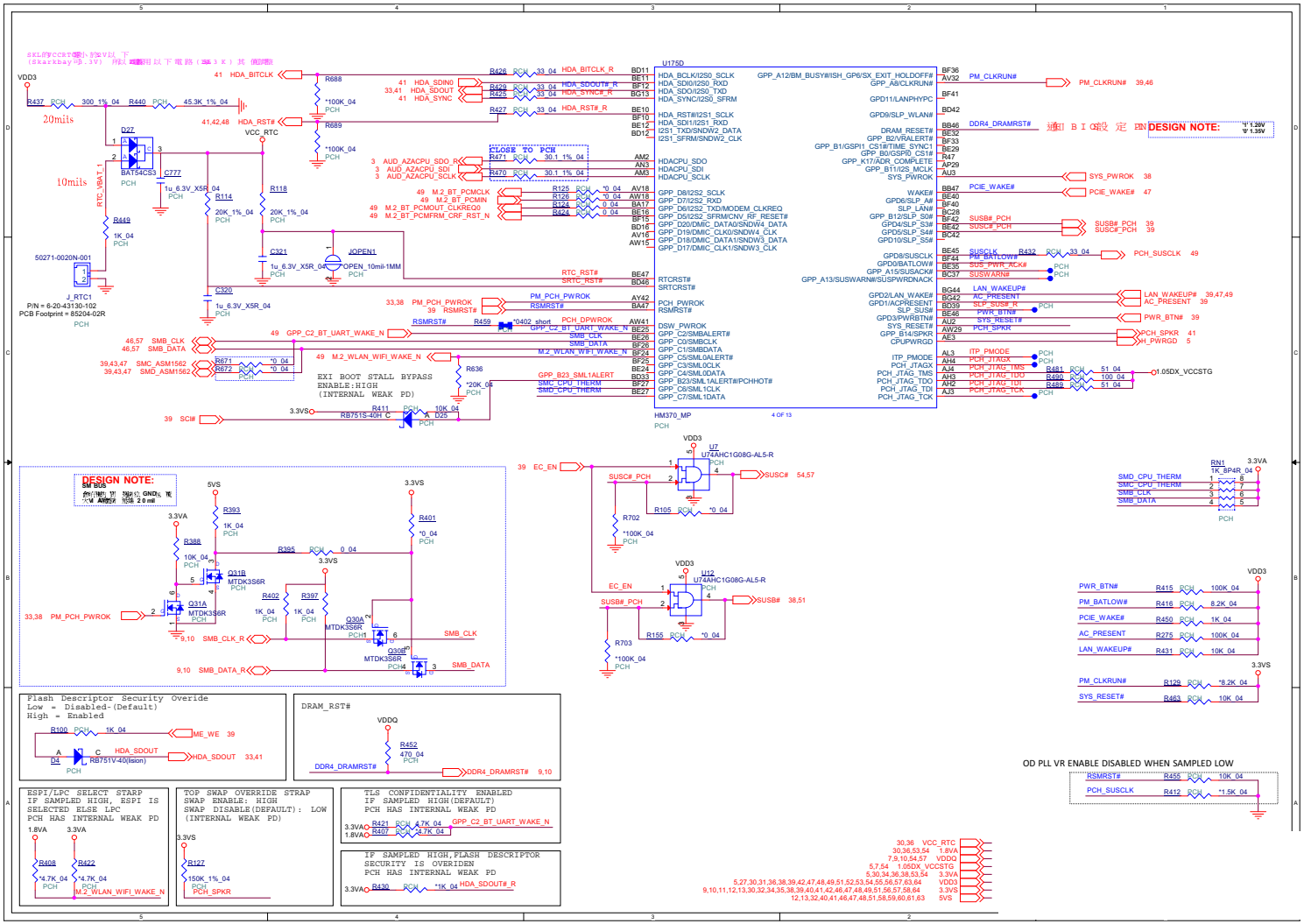

PCH 5/9

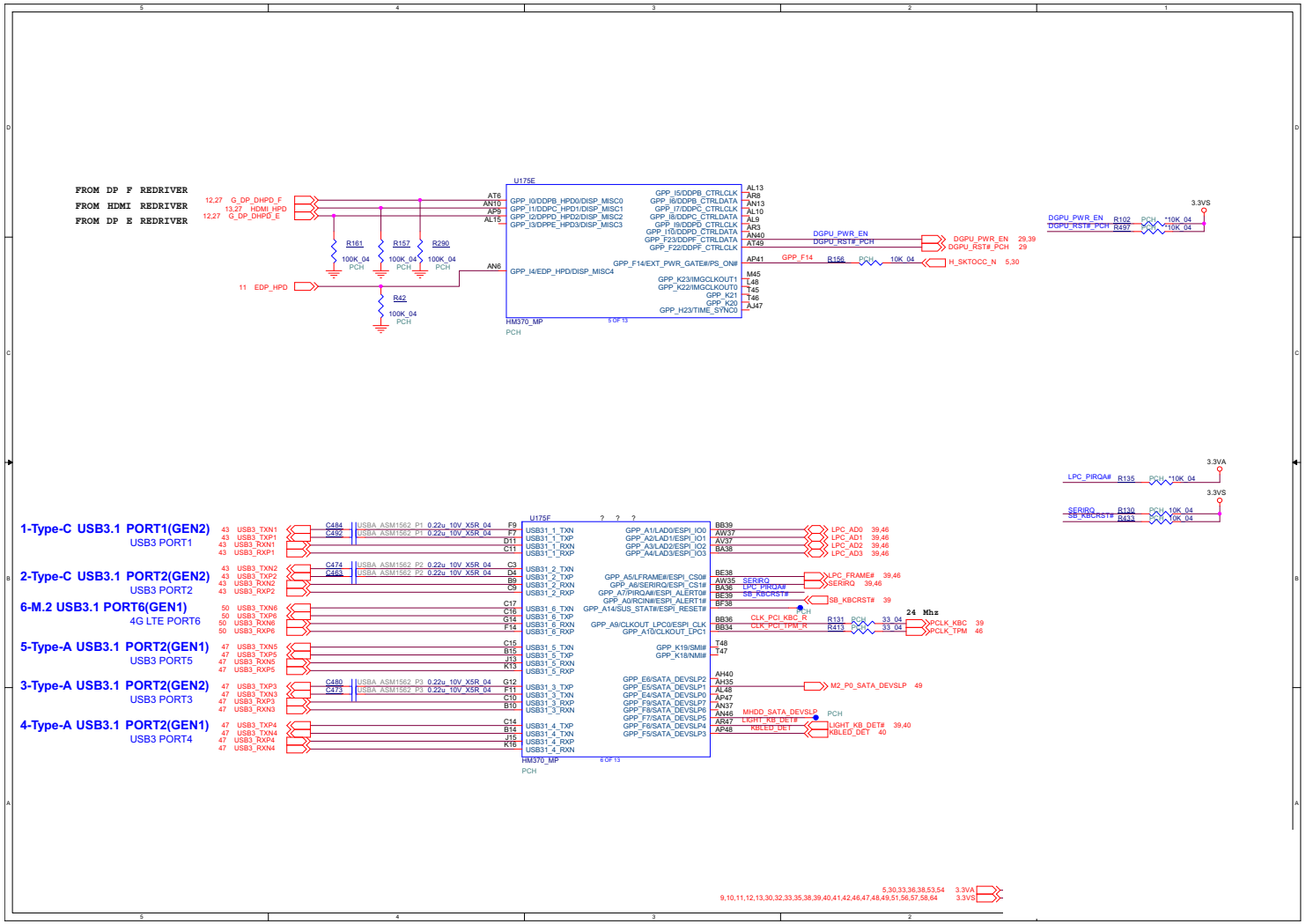

Sheet 34 of 72
PCH 5/9

PCH 6/9

Sheet 35 of 72
PCH 6/9

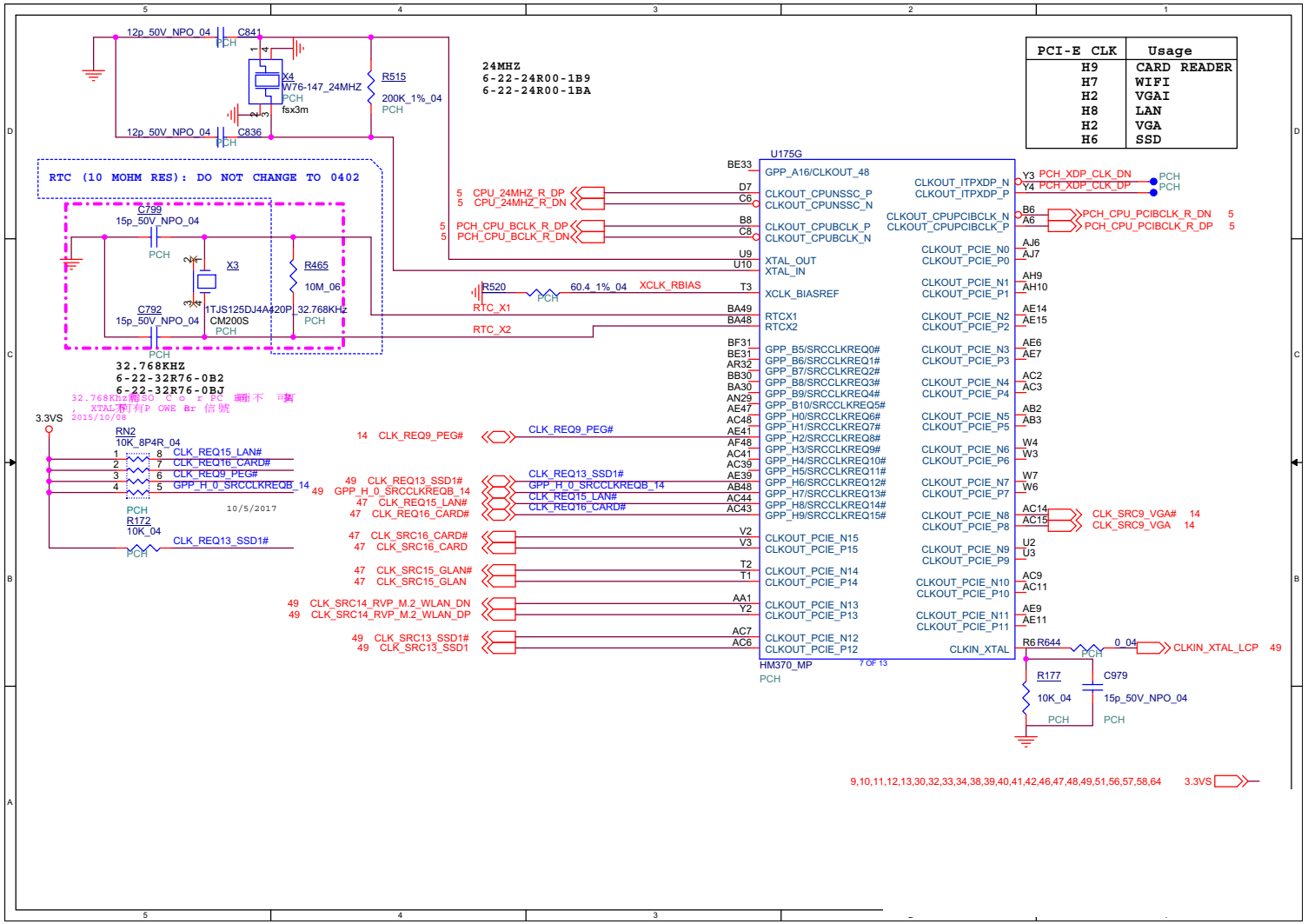

PCH 7/9

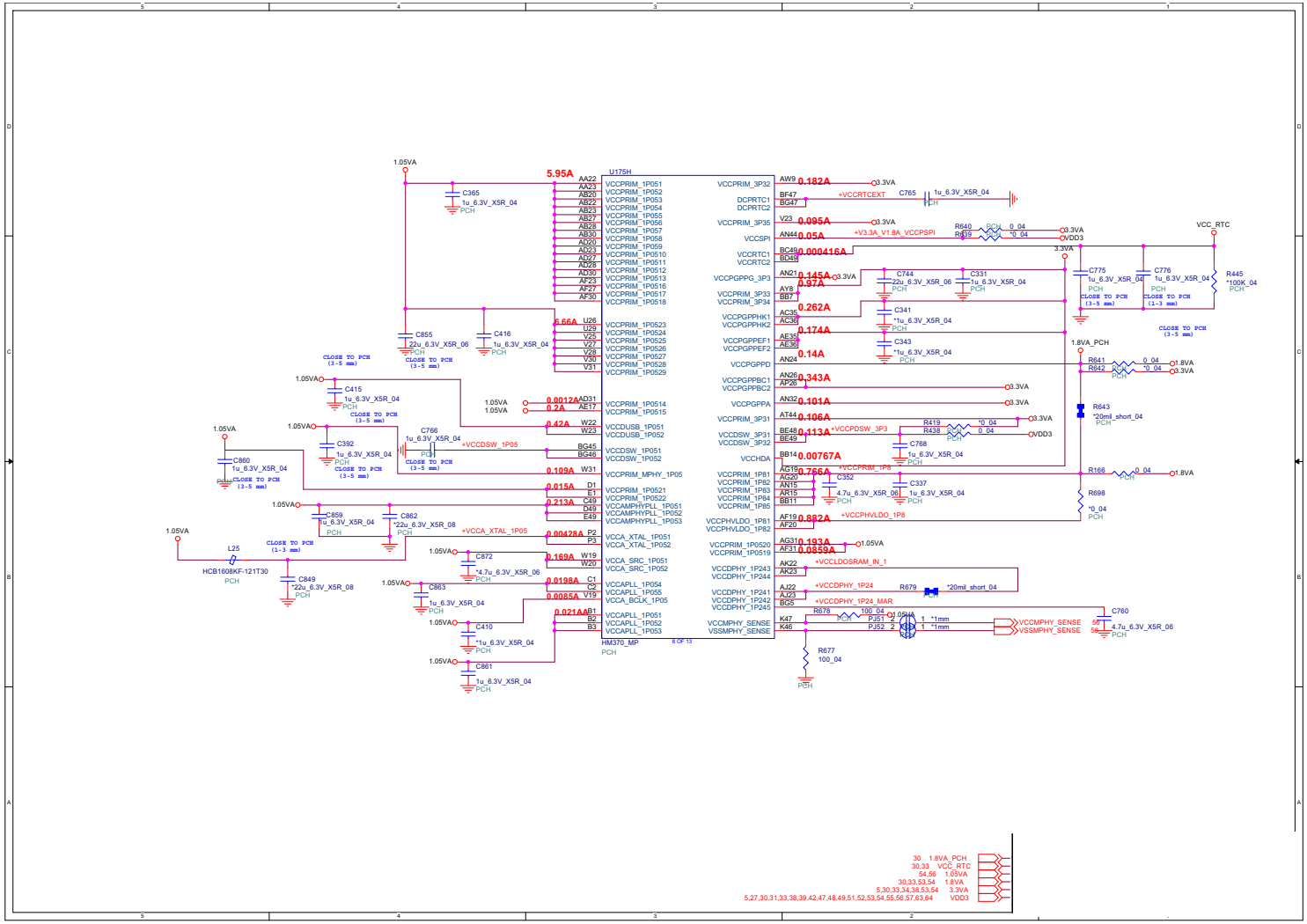

Sheet 36 of 72
PCH 7/9

PCH 8/9

Sheet 37 of 72
PCH 8/9

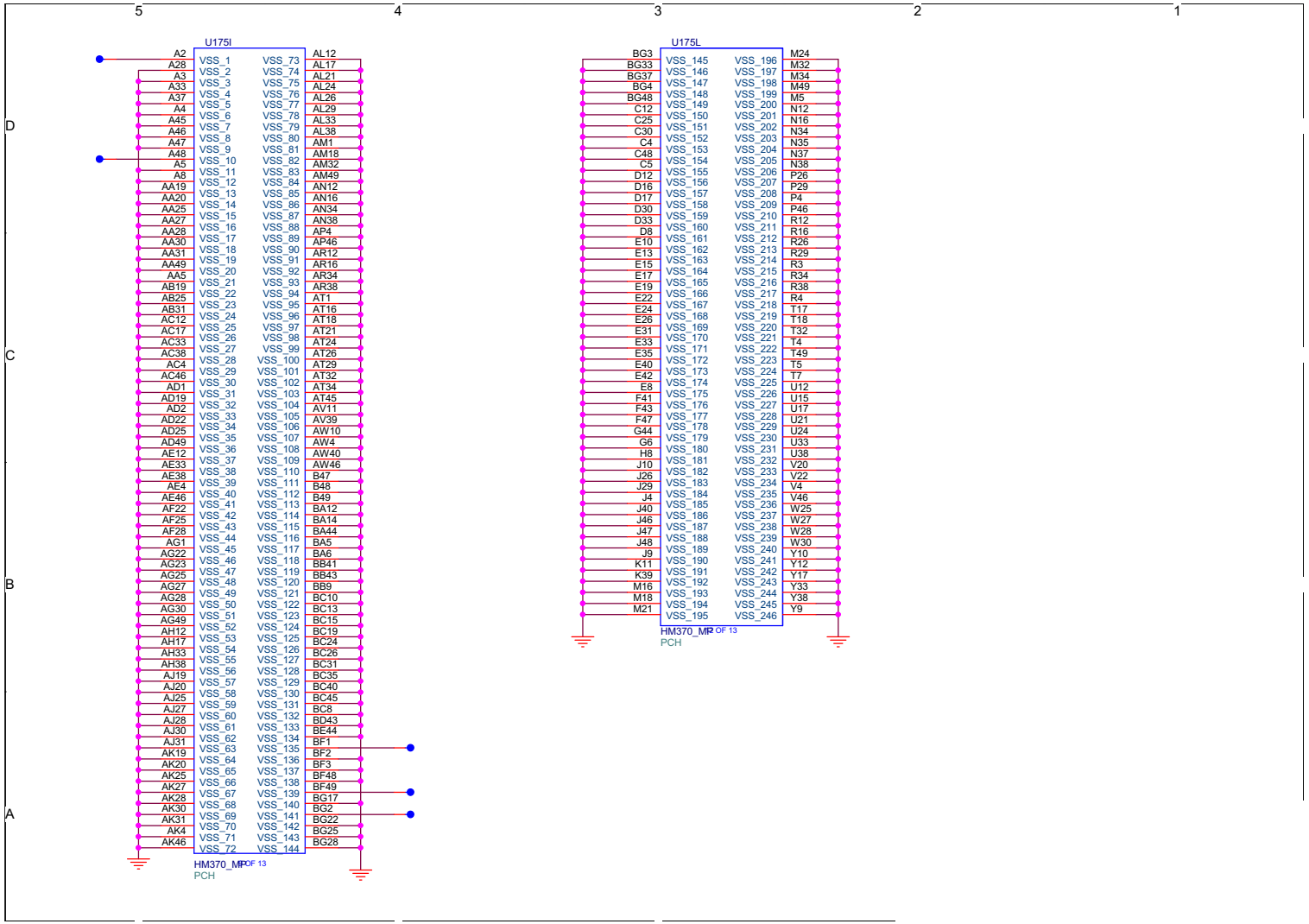

PCH 9/9

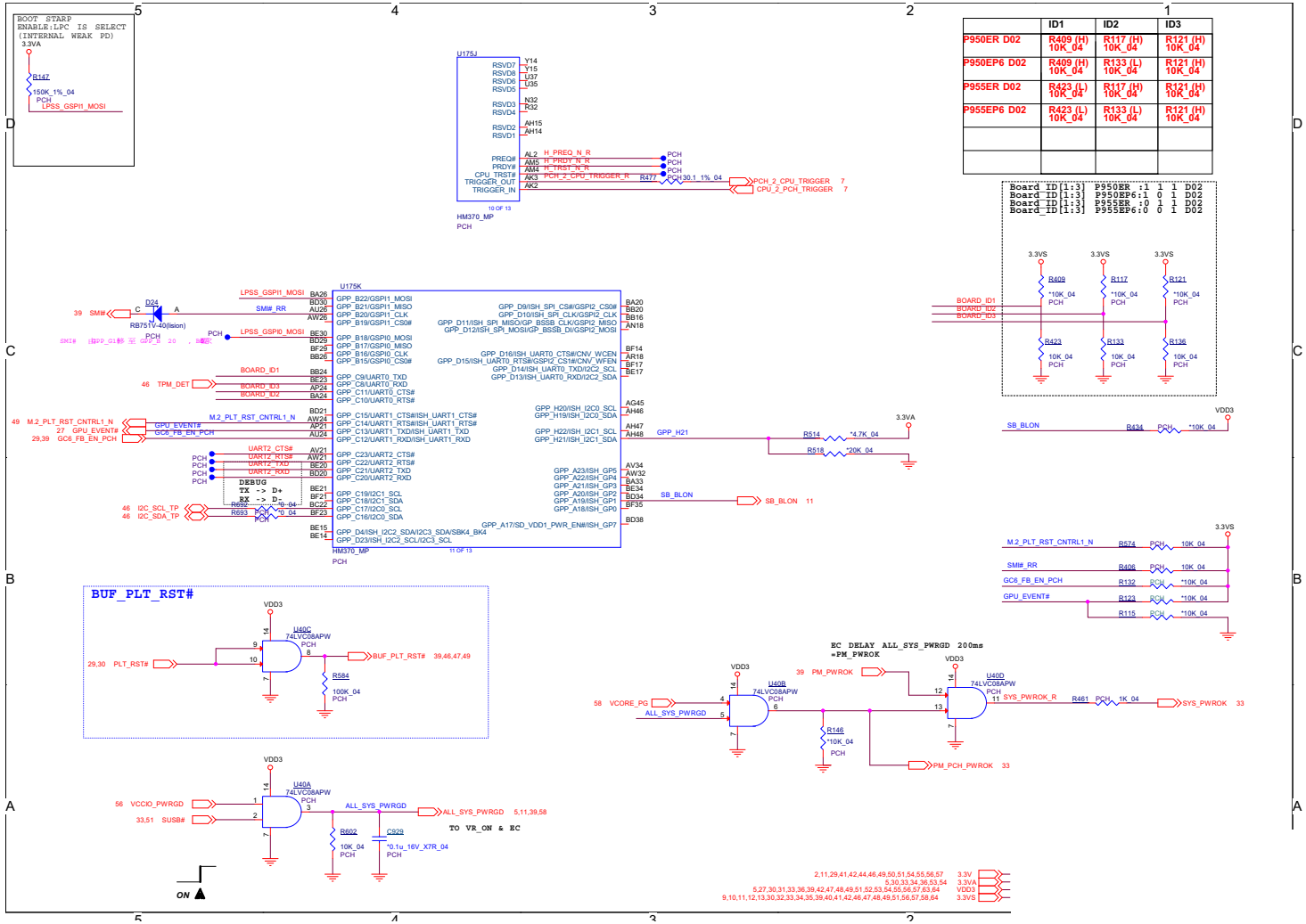

	ID1	ID2	ID3
P950ER D02	R409 (H) 10K_04	R117 (H) 10K_04	R121 (H) 10K_04
P950EP6 D02	R409 (H) 10K_04	R133 (L) 10K_04	R121 (H) 10K_04
P955ER D02	R423 (L) 10K_04	R117 (H) 10K_04	R121 (H) 10K_04
P955EP6 D02	R423 (L) 10K_04	R133 (L) 10K_04	R121 (H) 10K_04

Board_ID[1:3] P950ER :1 1 1 D02
Board_ID[1:3] P950EP6:1 0 1 D02
Board_ID[1:3] P955ER :0 1 1 D02
Board_ID[1:3] P955EP6:0 0 1 D02

Sheet 38 of 72
PCH 9/9

KBC IT8587

Sheet 39 of 72
KBC IT8587

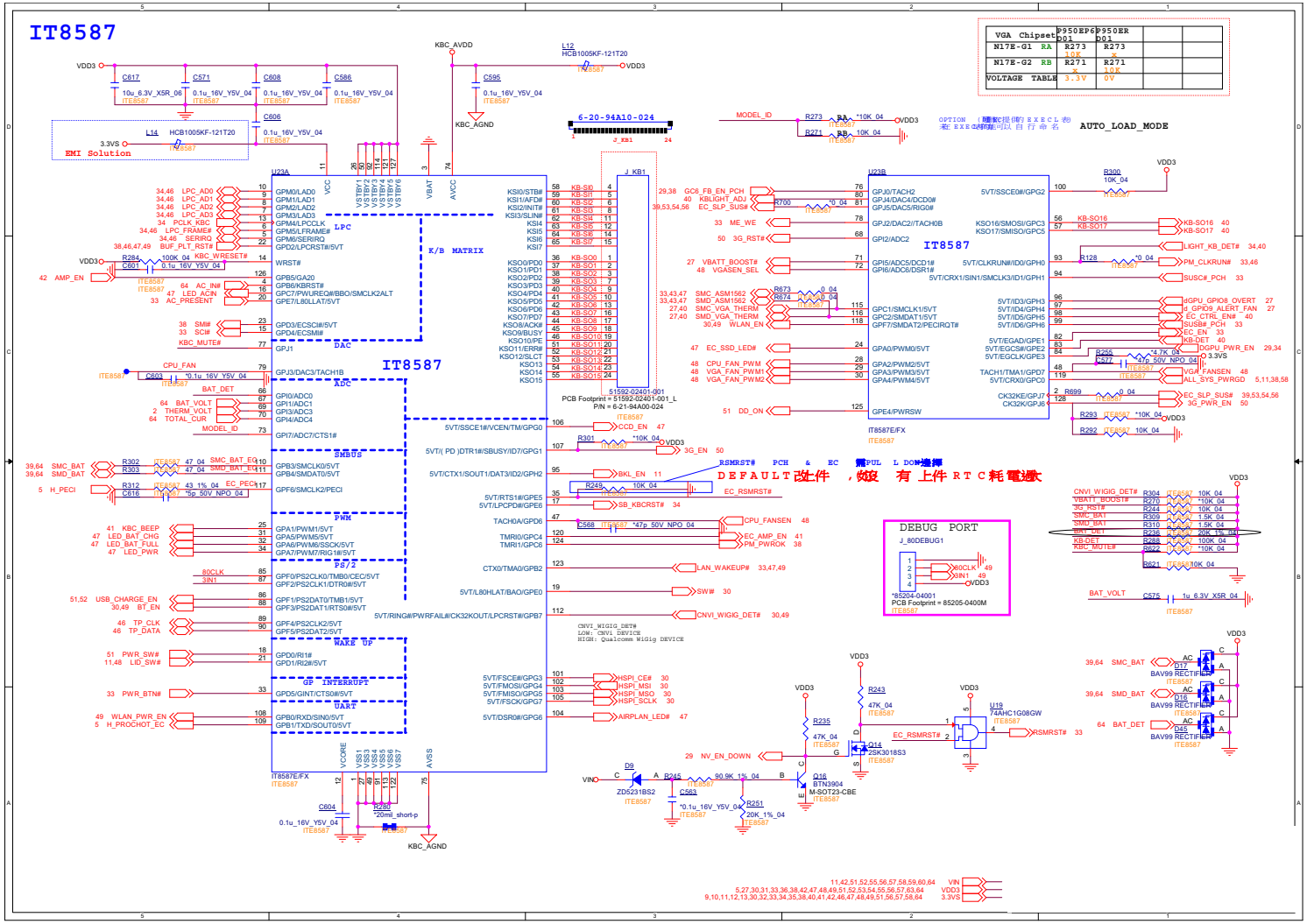

Backlight KB

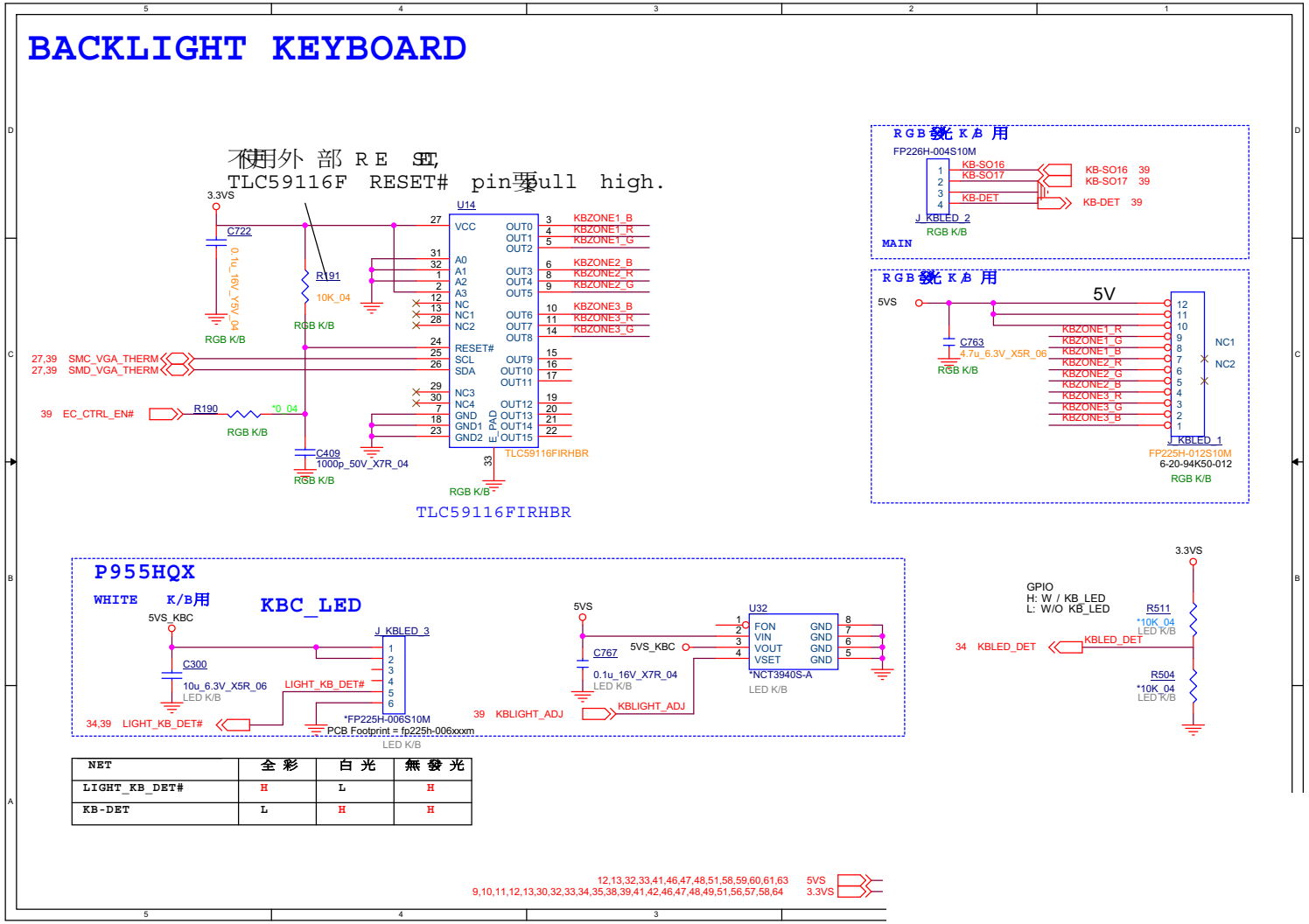

NET	全彩	白光	無發光
LIGHT_KB_DET#	H	L	H
KB-DET	L	H	H

Sheet 40 of 72
Backlight KB

Realtek ALC1220

Sheet 41 of 72
Realtek ALC1220

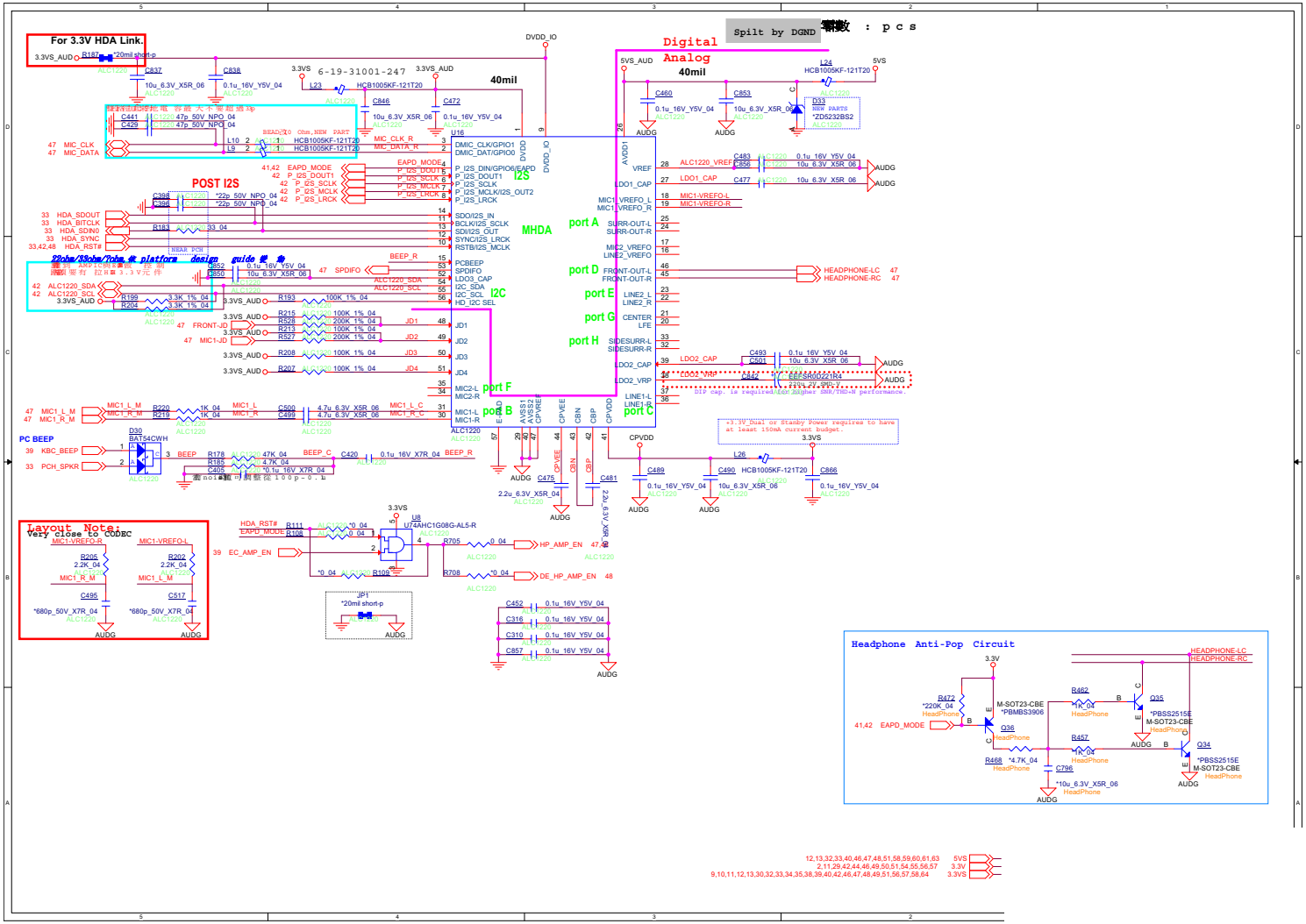

Smart AMP ALC1306

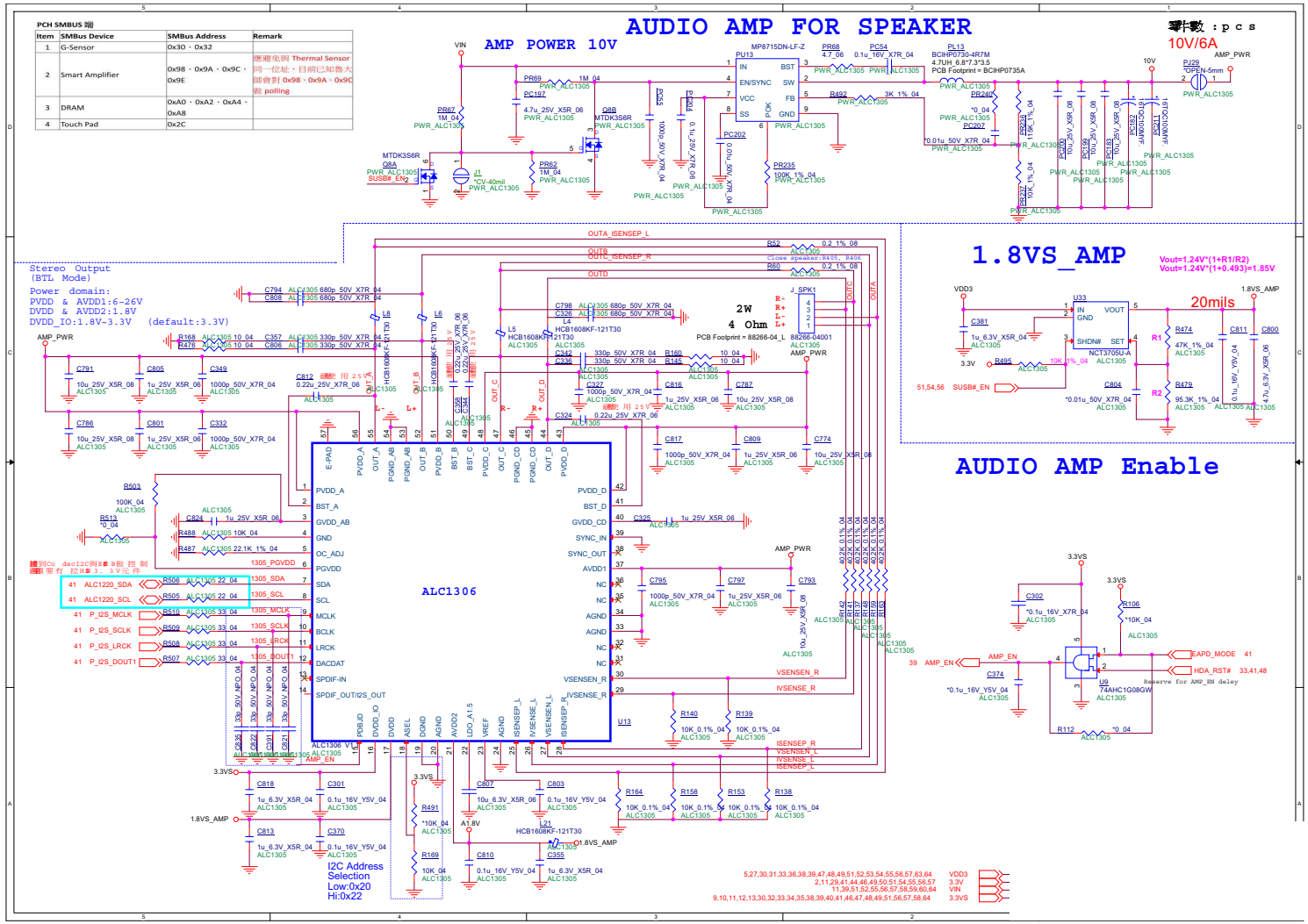

PCH SMBUS 端

Item	SMBus Device	SMBus Address	Remark
1	G-Sensor	0x30、0x32	
2	Smart Amplifier	0x98、0x9A、0x9C、0x9E	應避免與 Thermal Sensor 同一位址，目前已知魯大師會對 0x98、0x9A、0x9C 做 polling
3	DRAM	0xA0、0xA2、0xA4、0xA8	
4	Touch Pad	0x2C	

Sheet 42 of 72
Smart AMP
ALC1306

ASM1562 1/3

Sheet 43 of 72
ASM1562 1/3

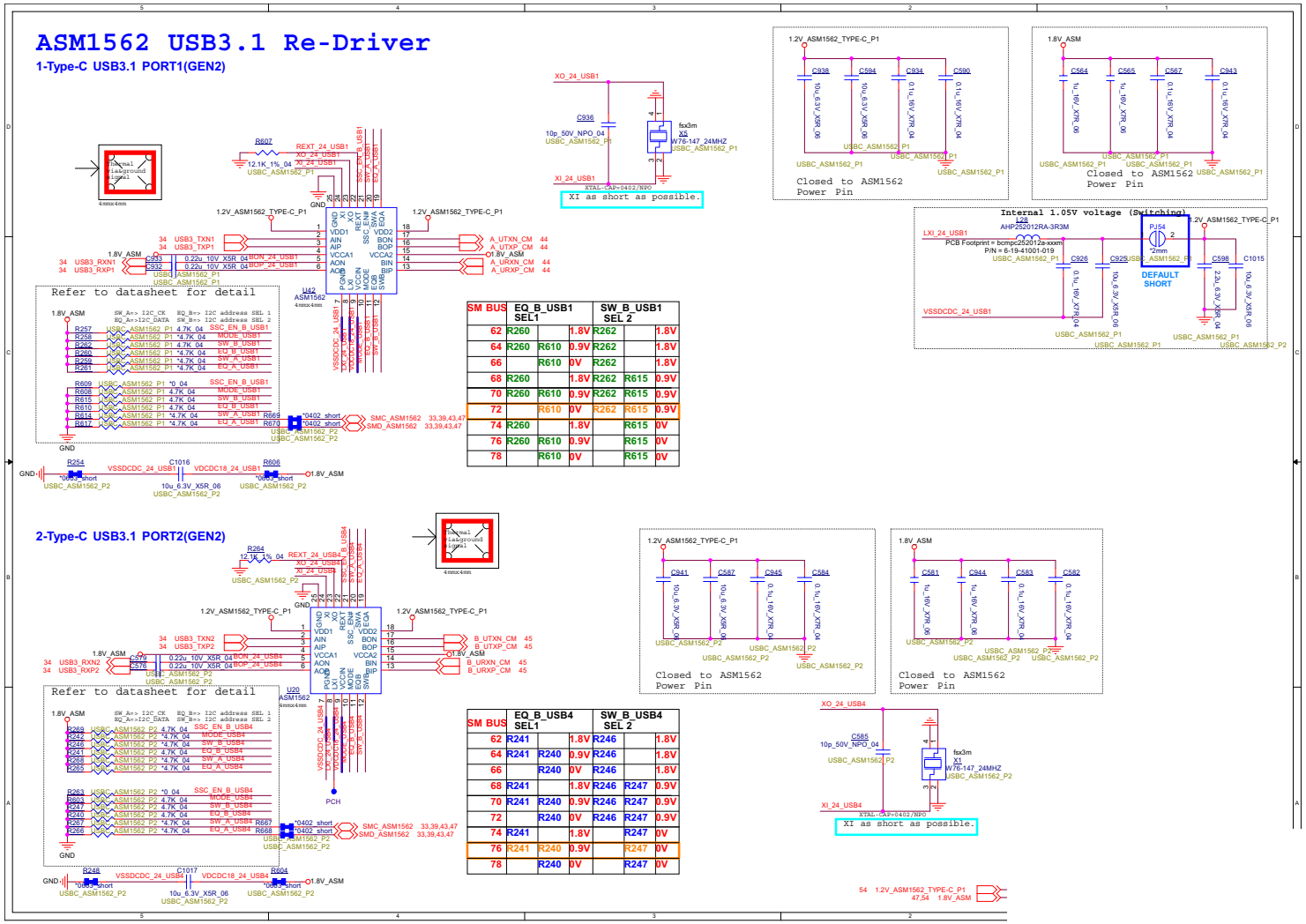

ASM1543 2/3

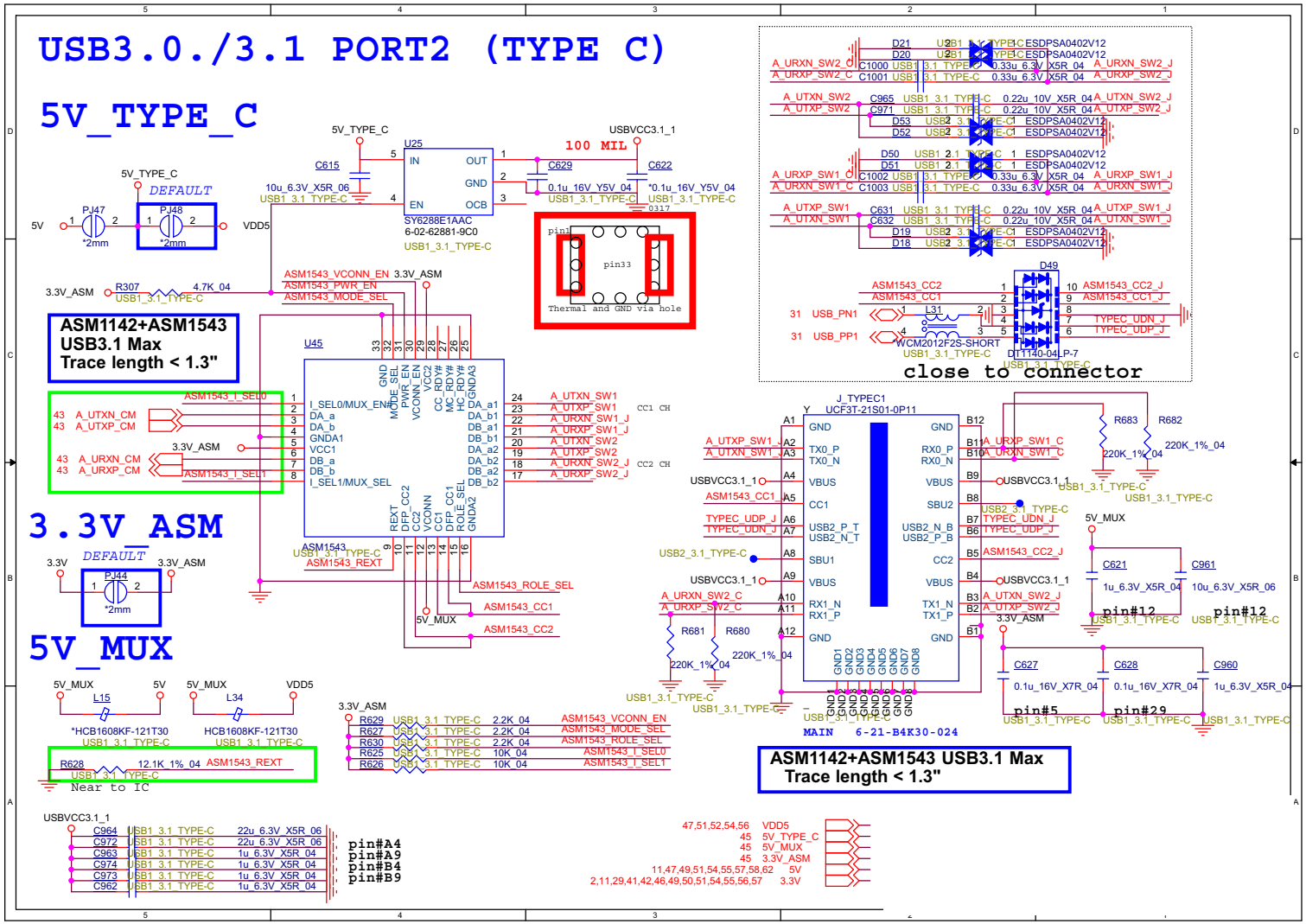

Sheet 44 of 72
ASM1543 2/3

ASM1543 3/3

Sheet 45 of 72
ASM1543 3/3

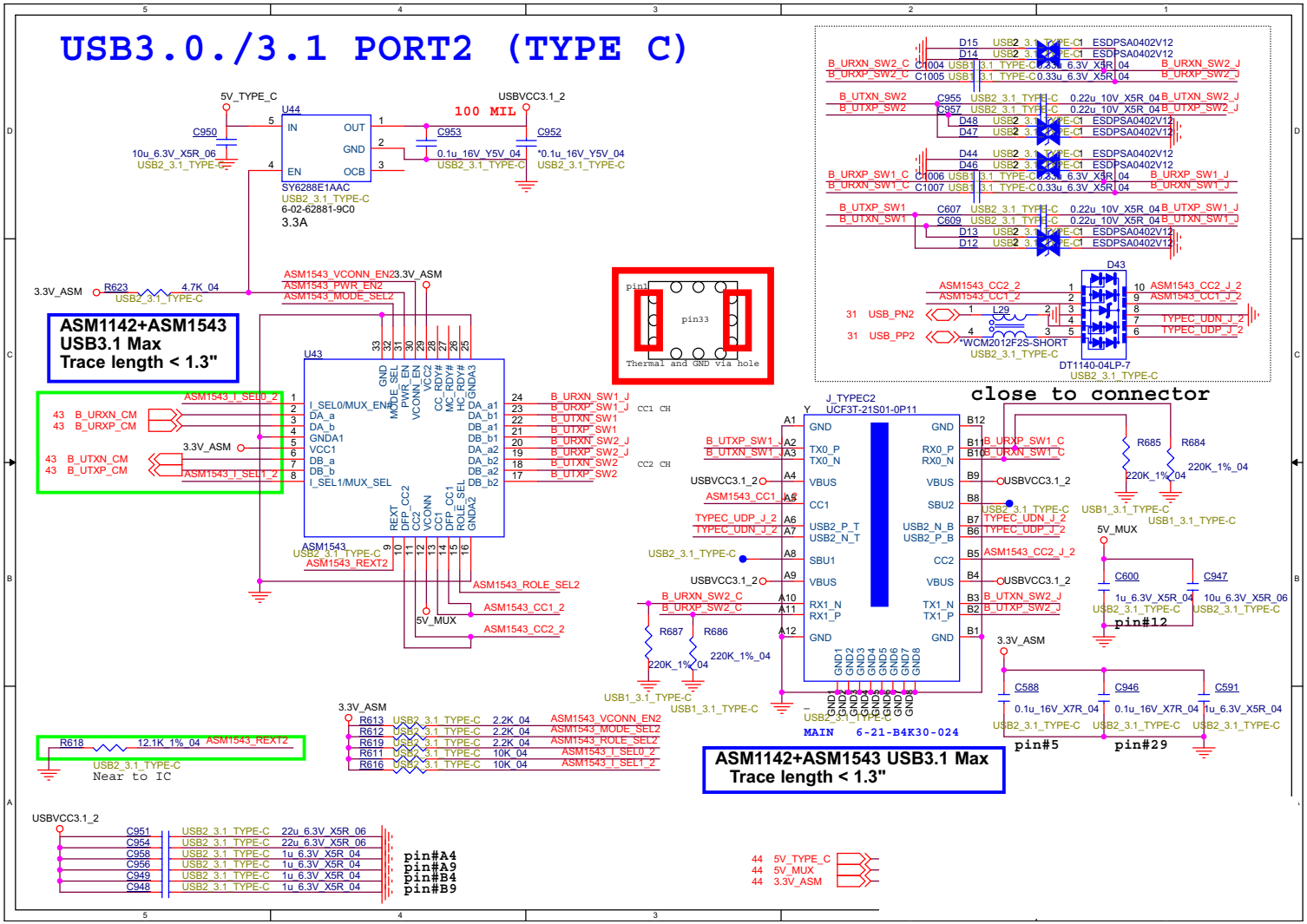

TPM, TP

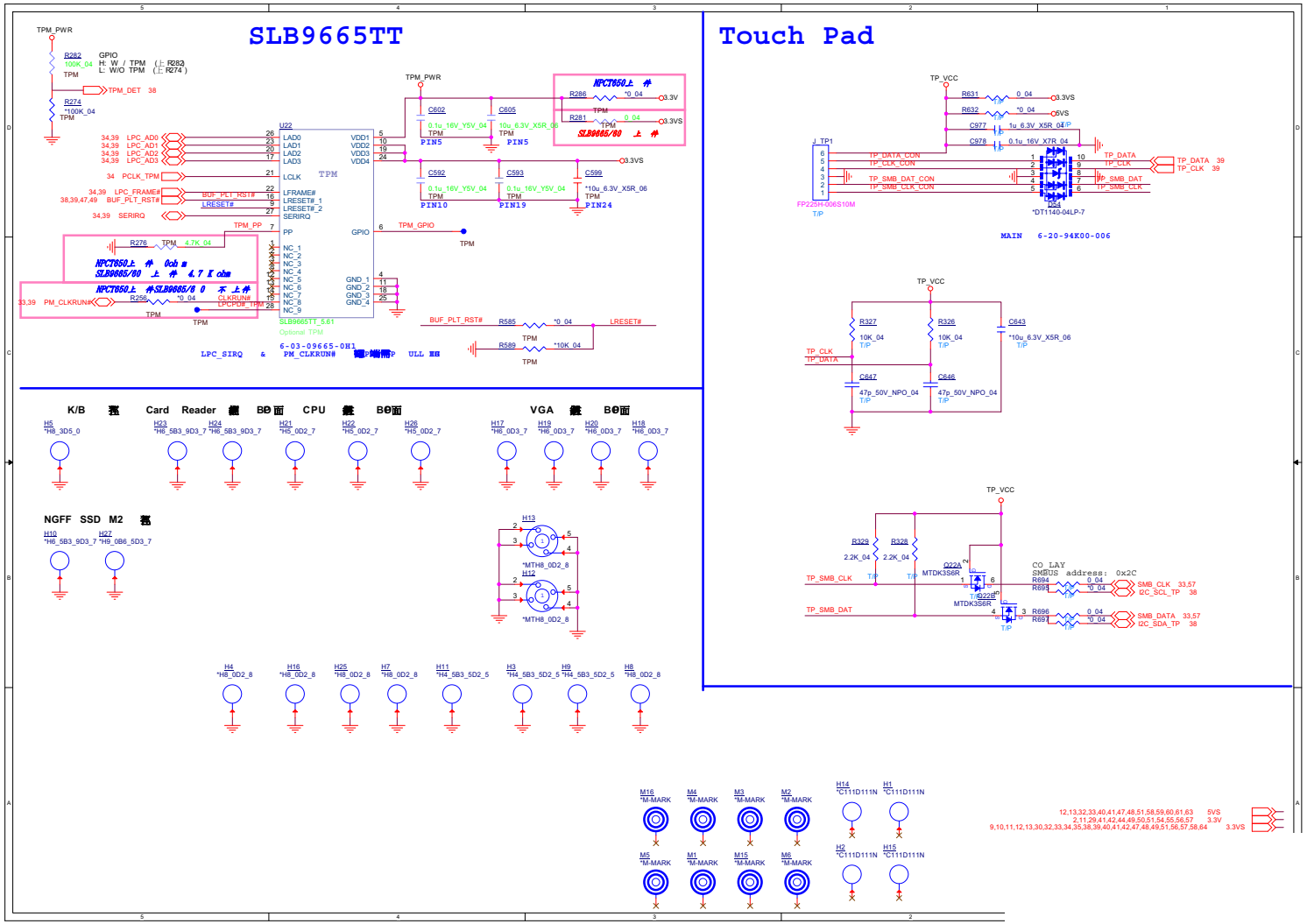

Sheet 46 of 72
TPM, TP

Connector

Sheet 47 of 72
Connector

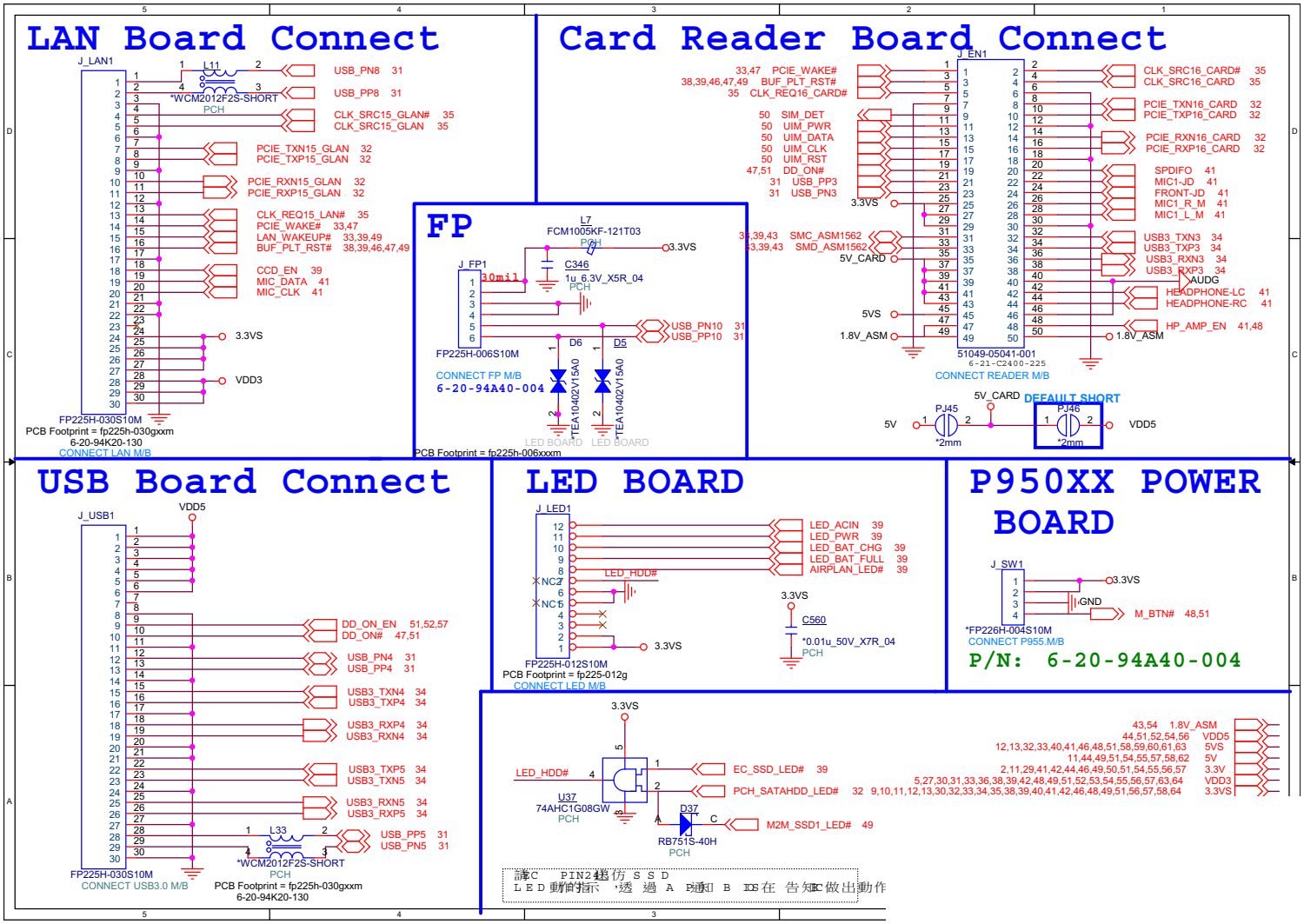

MFan, LID, LED

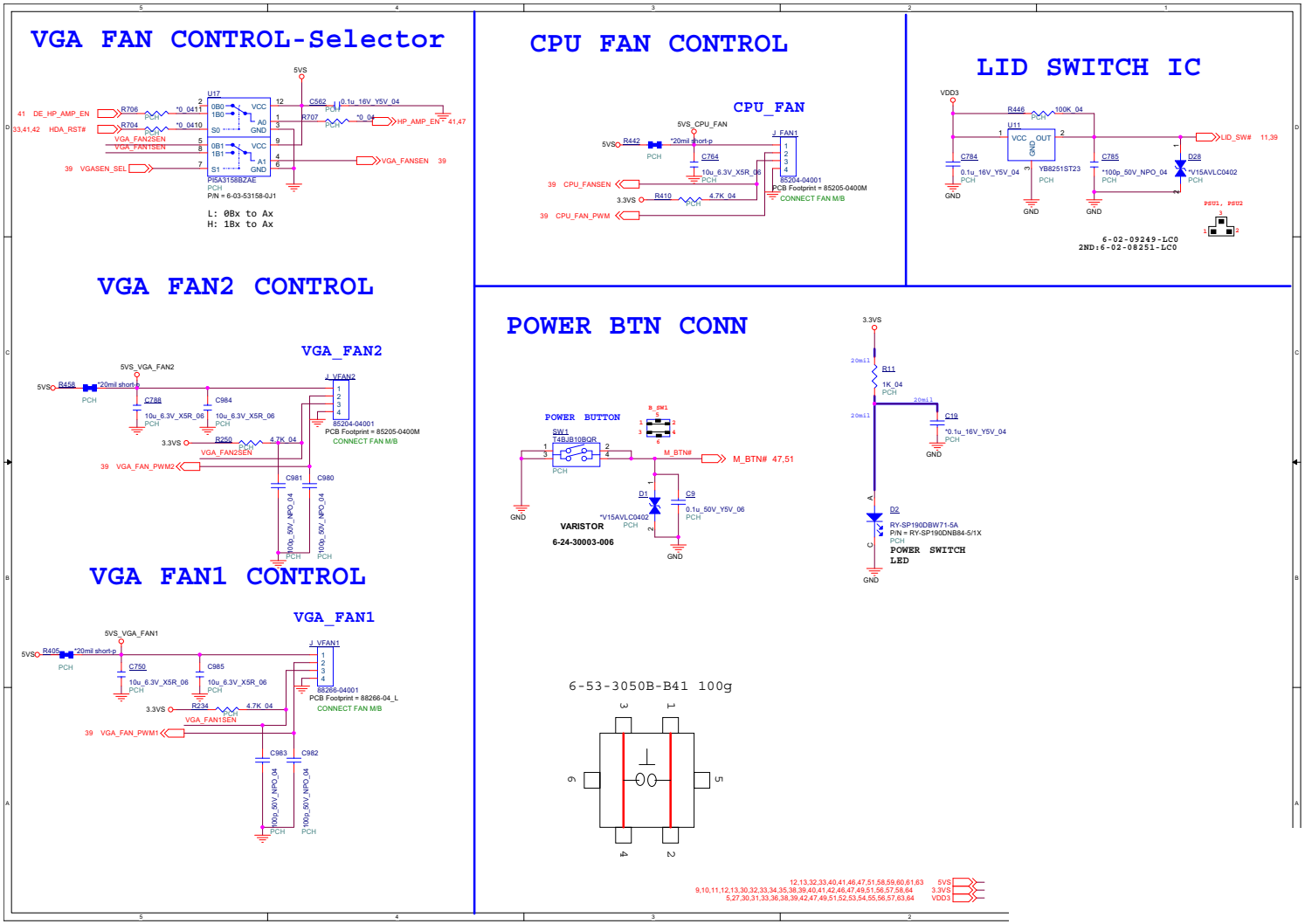

Sheet 48 of 72
Fan, LID, LED

M.2 WLAN+BT, PCIE4X SSD

Sheet 49 of 72
M.2 WLAN+BT, PCIE4X SSD

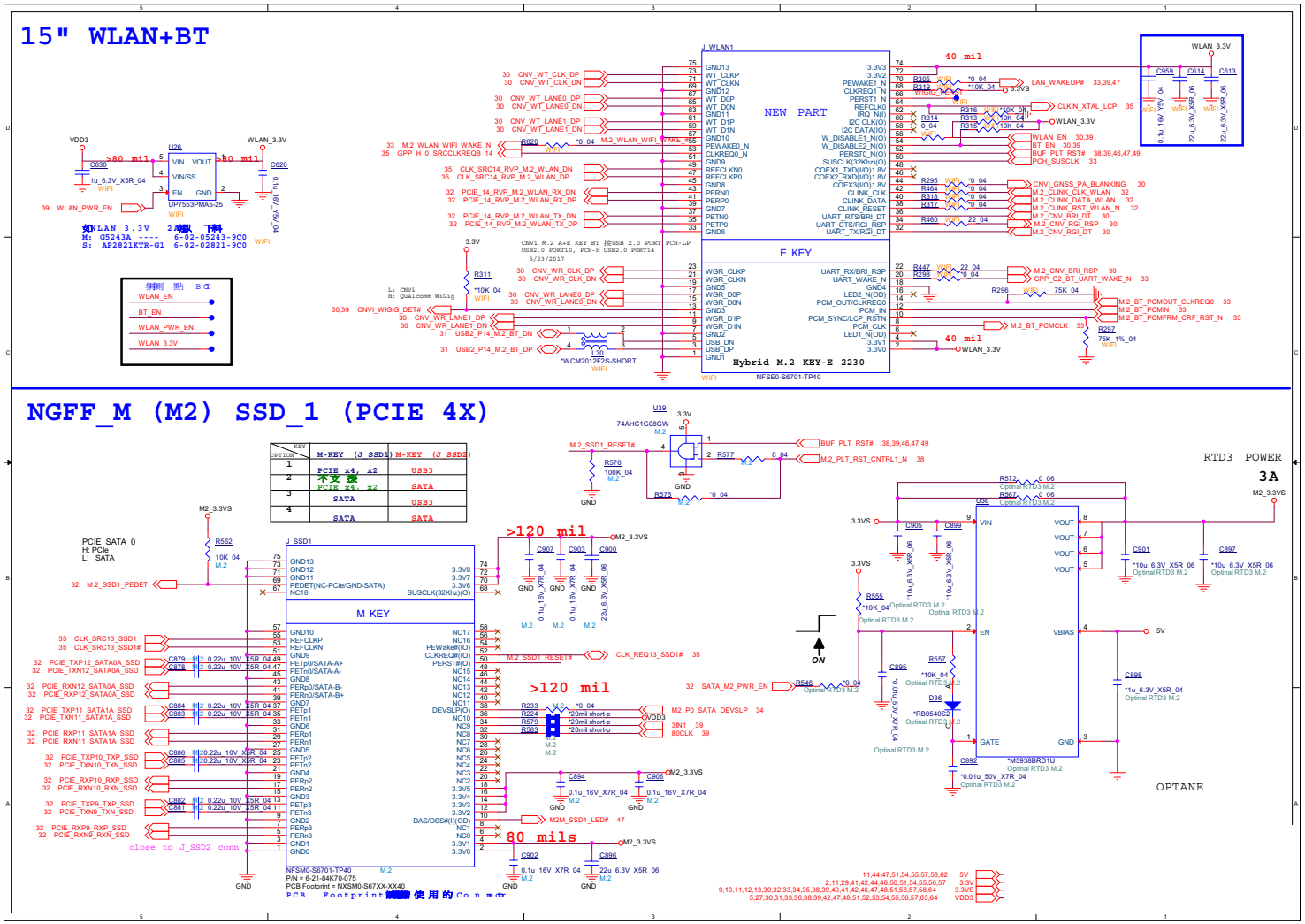

M.2 3G/LTE, SIM

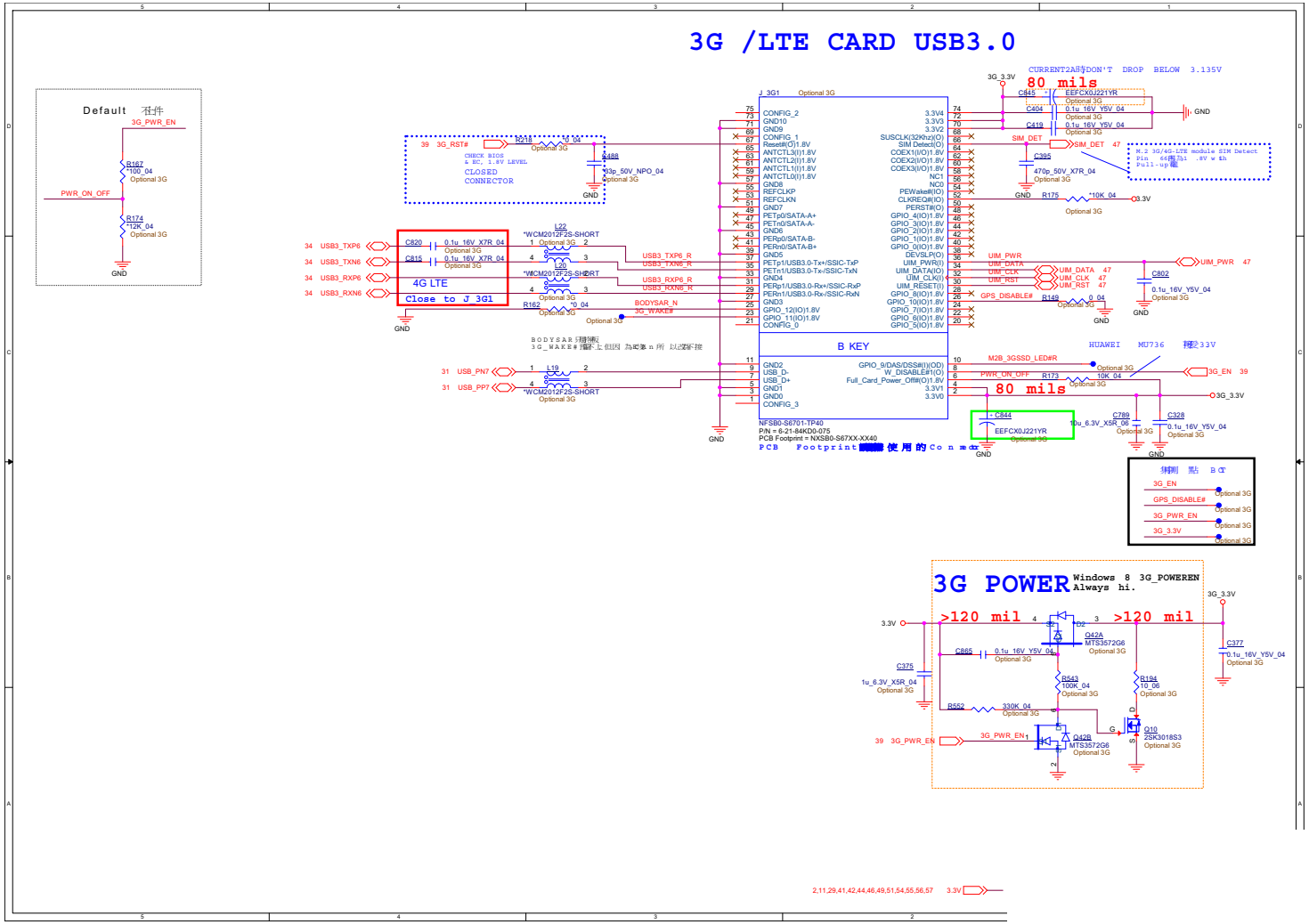

Sheet 50 of 72
M.2 3G/LTE, SIM

B.Schematic Diagrams

5V, 5VS, 3.3V, 3.3VS

Sheet 51 of 72
5V, 5VS, 3.3V, 3.3VS

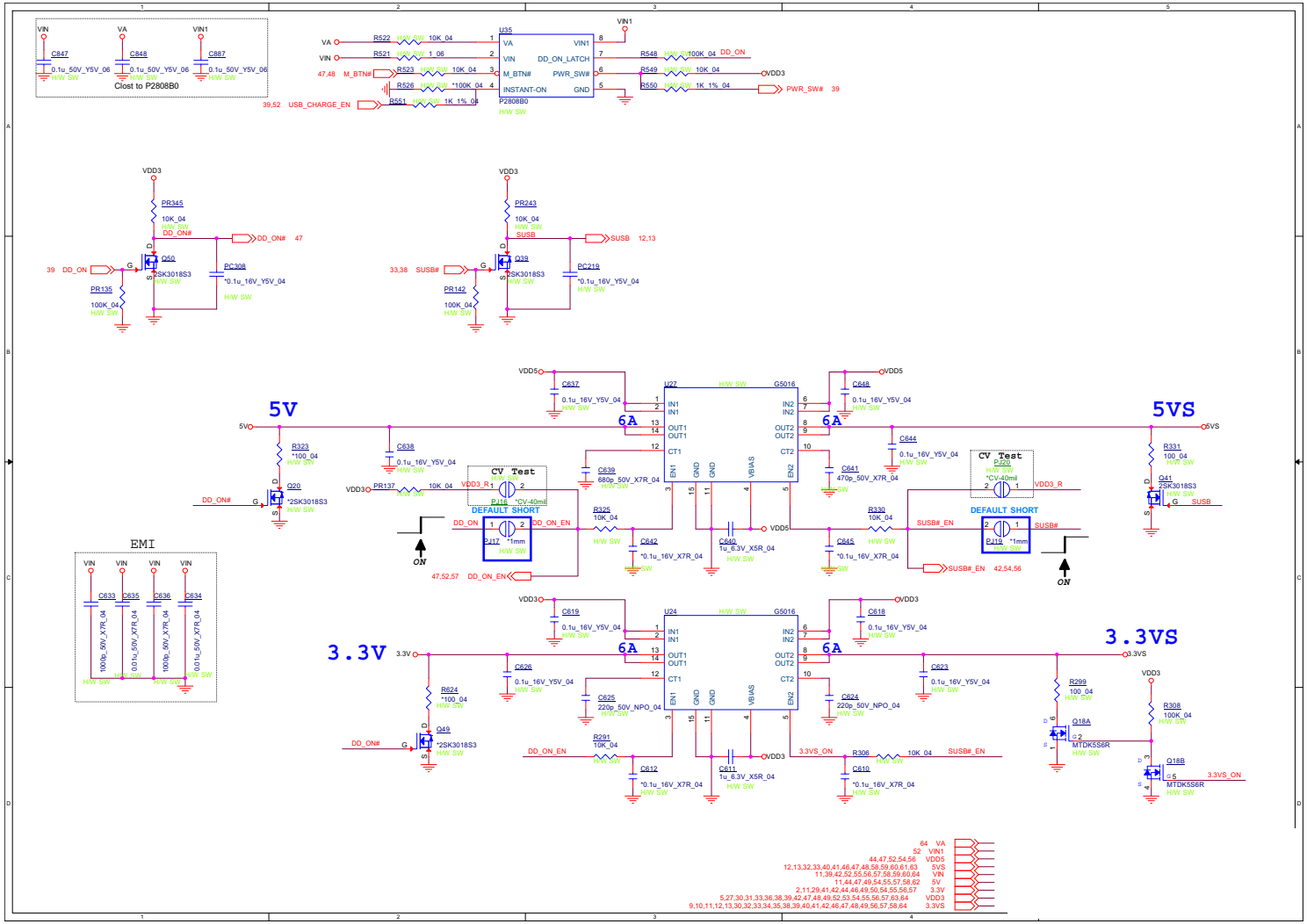

VDD3, VDD5

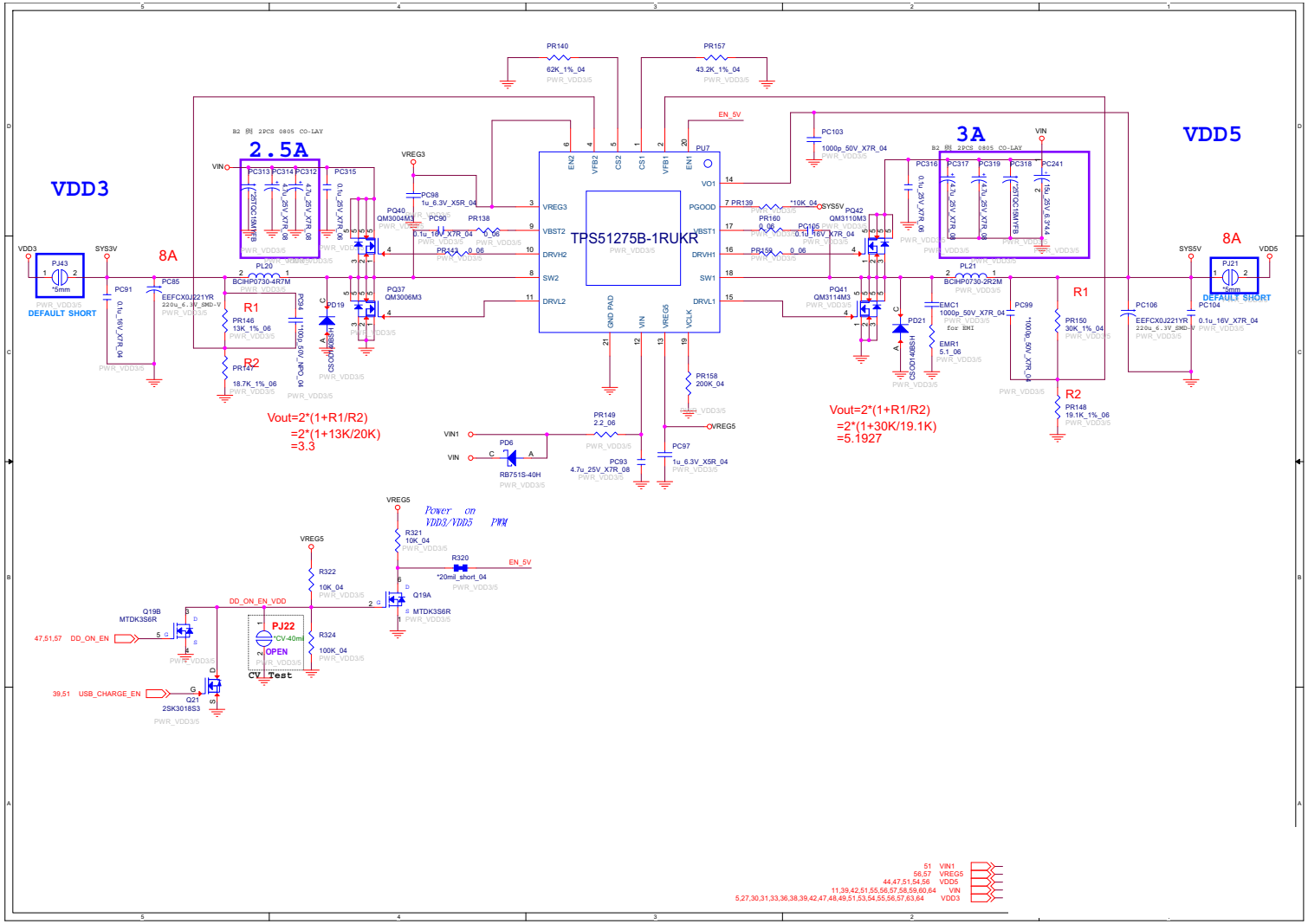

Sheet 52 of 72
VDD3, VDD5

1V8_RUN/AON, 3.3VA

Sheet 53 of 72
1V8_RUN/AON, 3.3VA

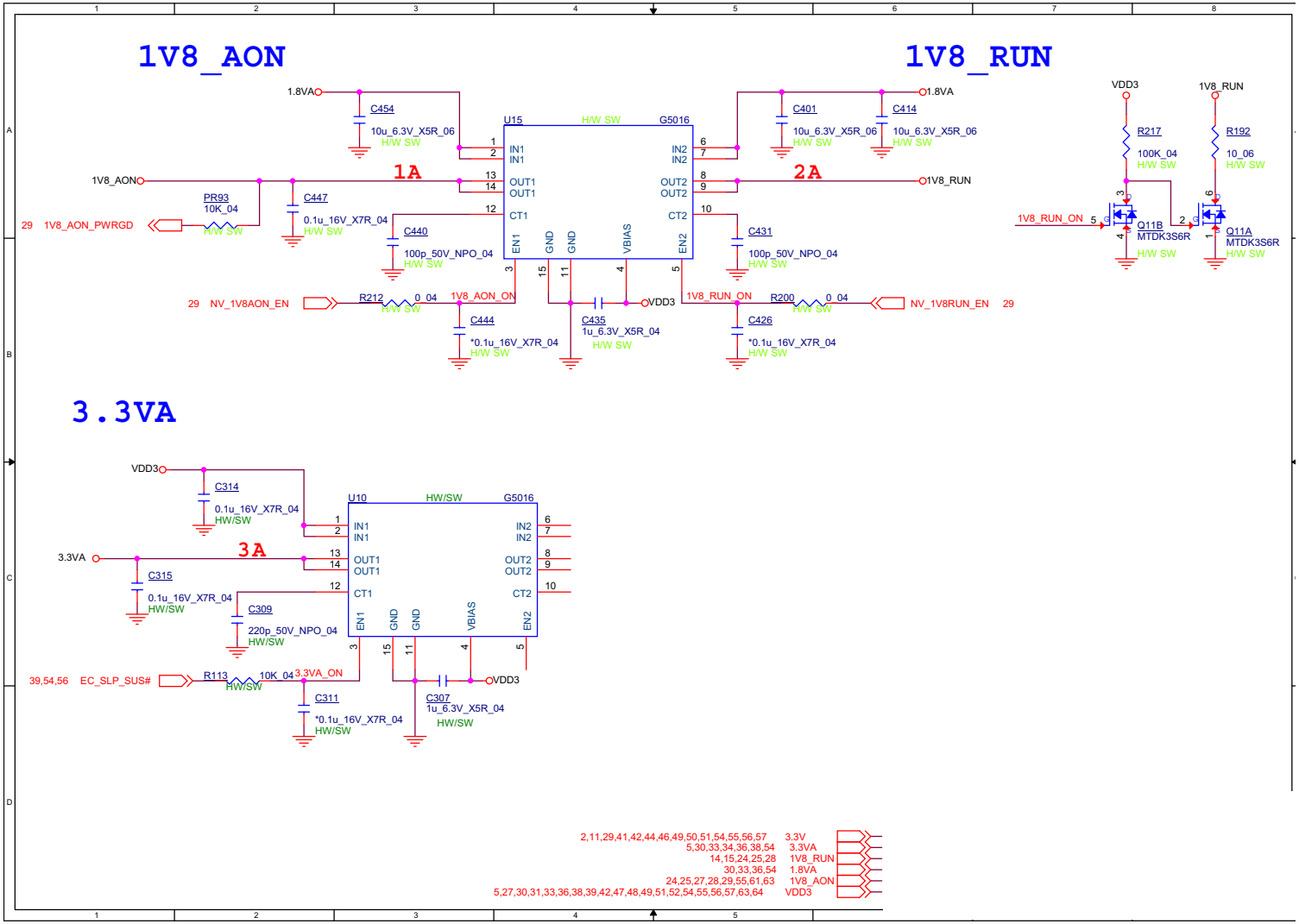

1.8VA/1.05V_XX, NV3V3

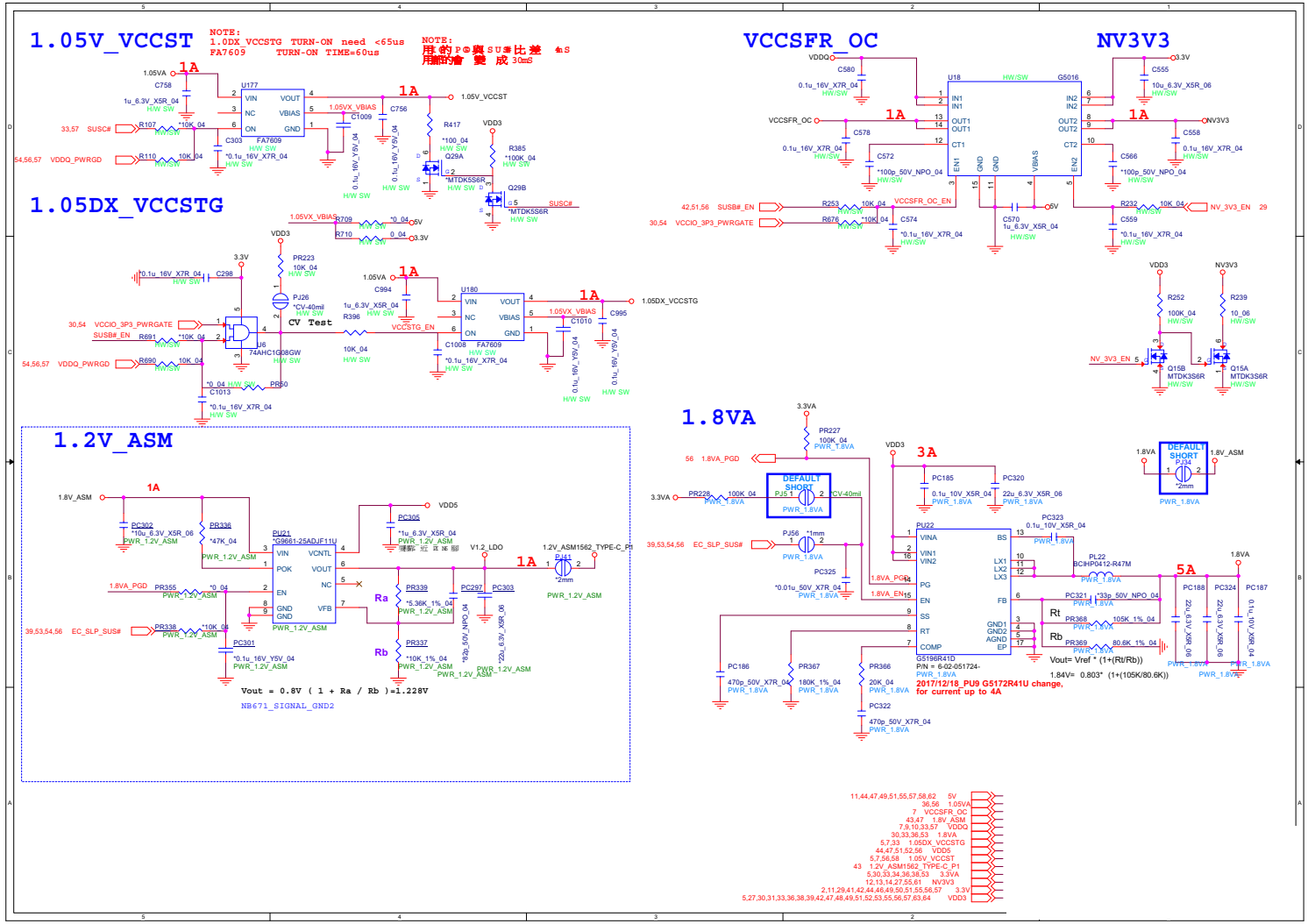

Sheet 54 of 72
1.8VA/1.05V_XX, NV3V3

B.Schematic Diagrams

PEX_VDD

Sheet 55 of 72
PEX_VDD

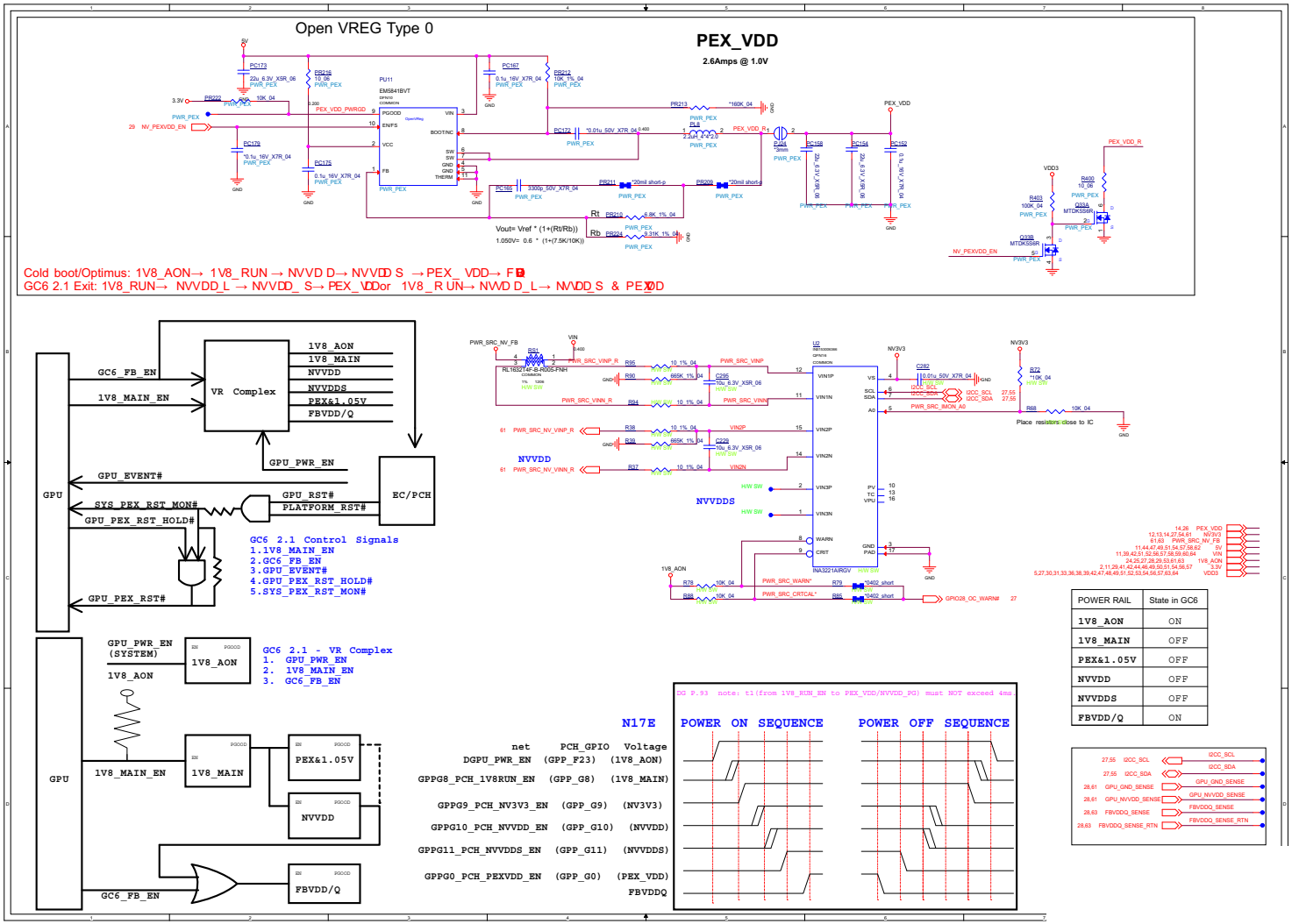

1.05VA, VCCIO

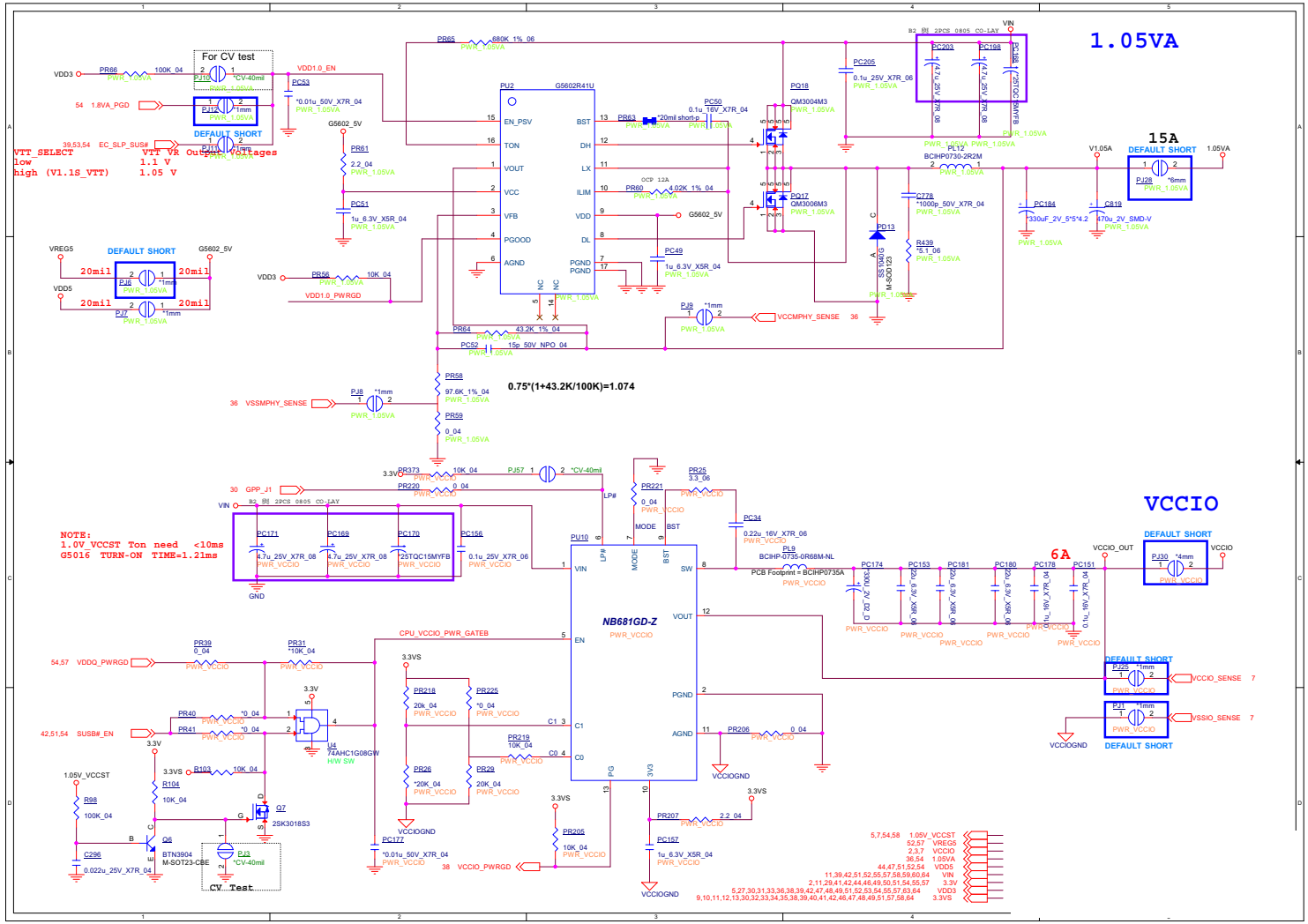

Sheet 56 of 72
1.05VA, VCCIO

DDR 1.2V, 0.6VS

Sheet 57 of 72
DDR 1.2V, 0.6VS

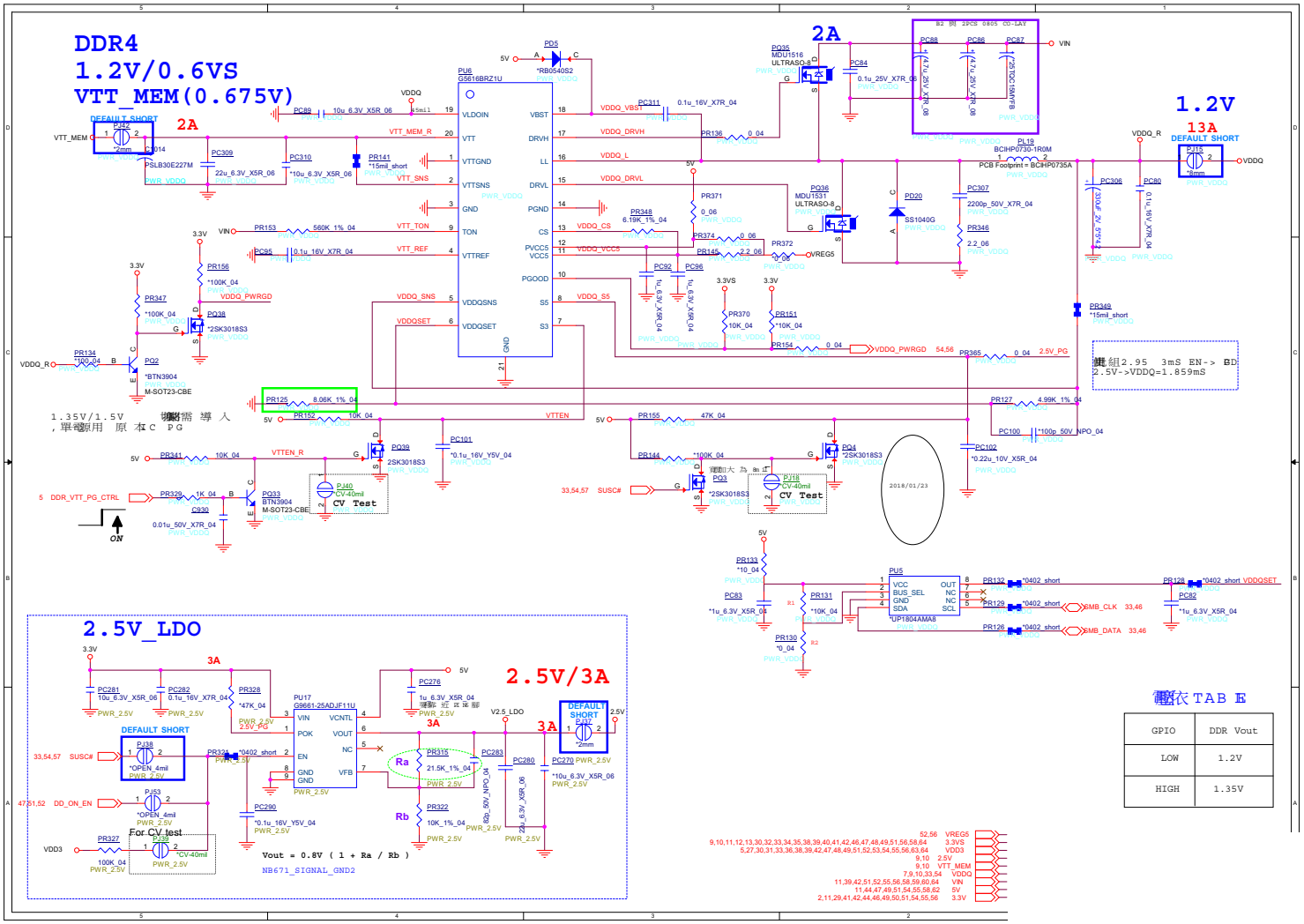

VCore & VCCGT & VCCSA

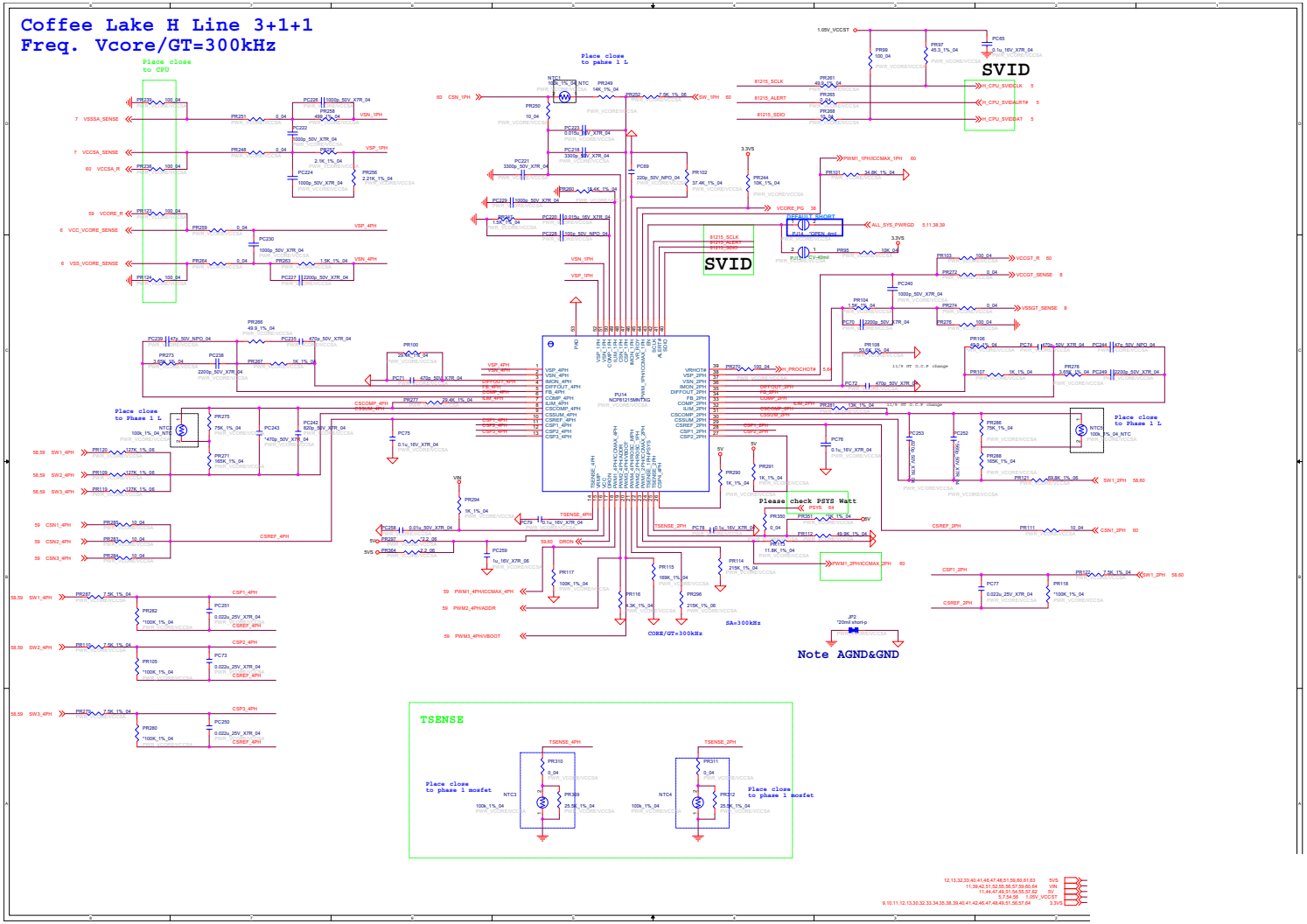

Sheet 58 of 72
VCore & VCCGT & VCCSA

VCore Output

Sheet 59 of 72
VCore Output

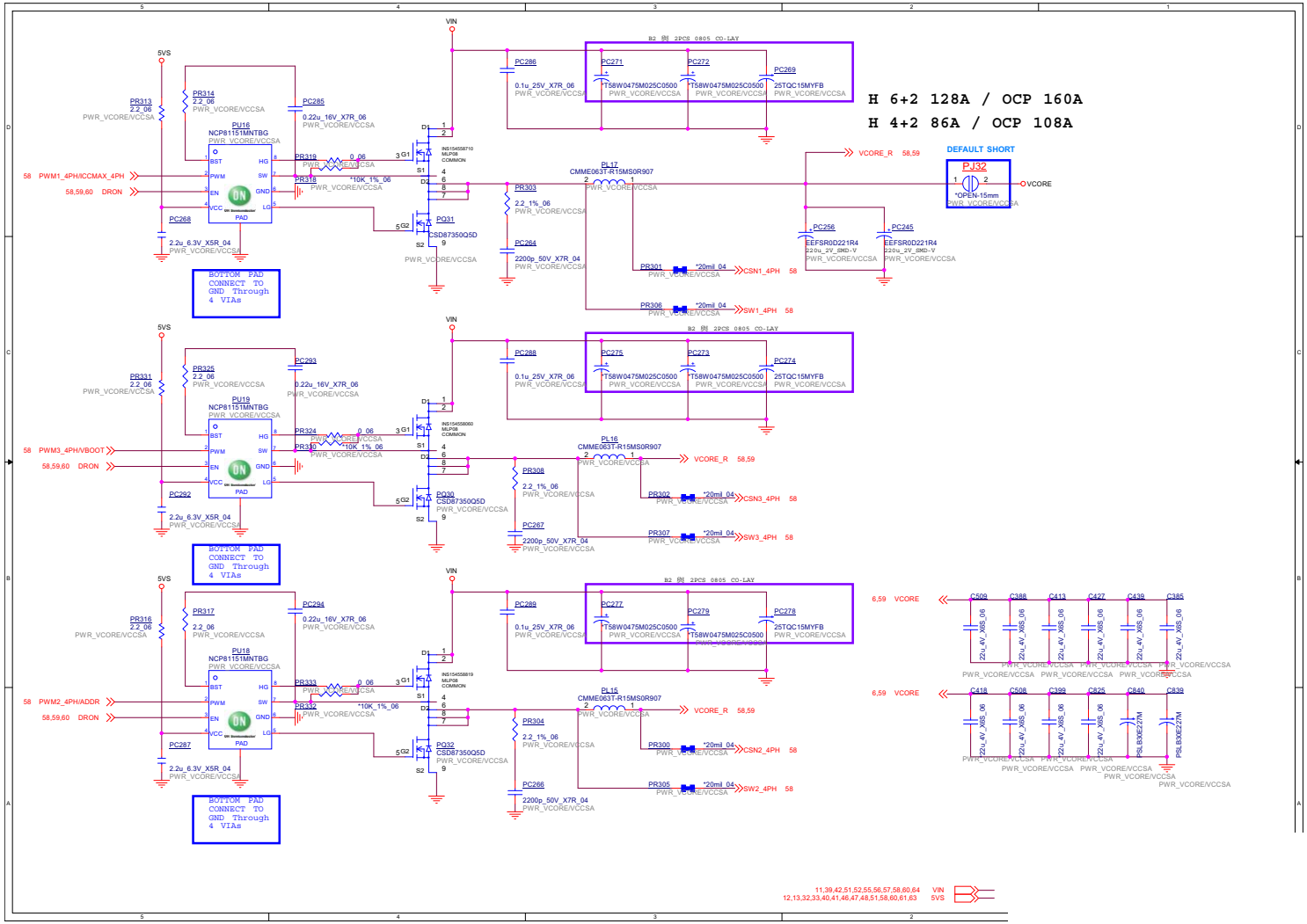

VCCGT, VCCSA Output

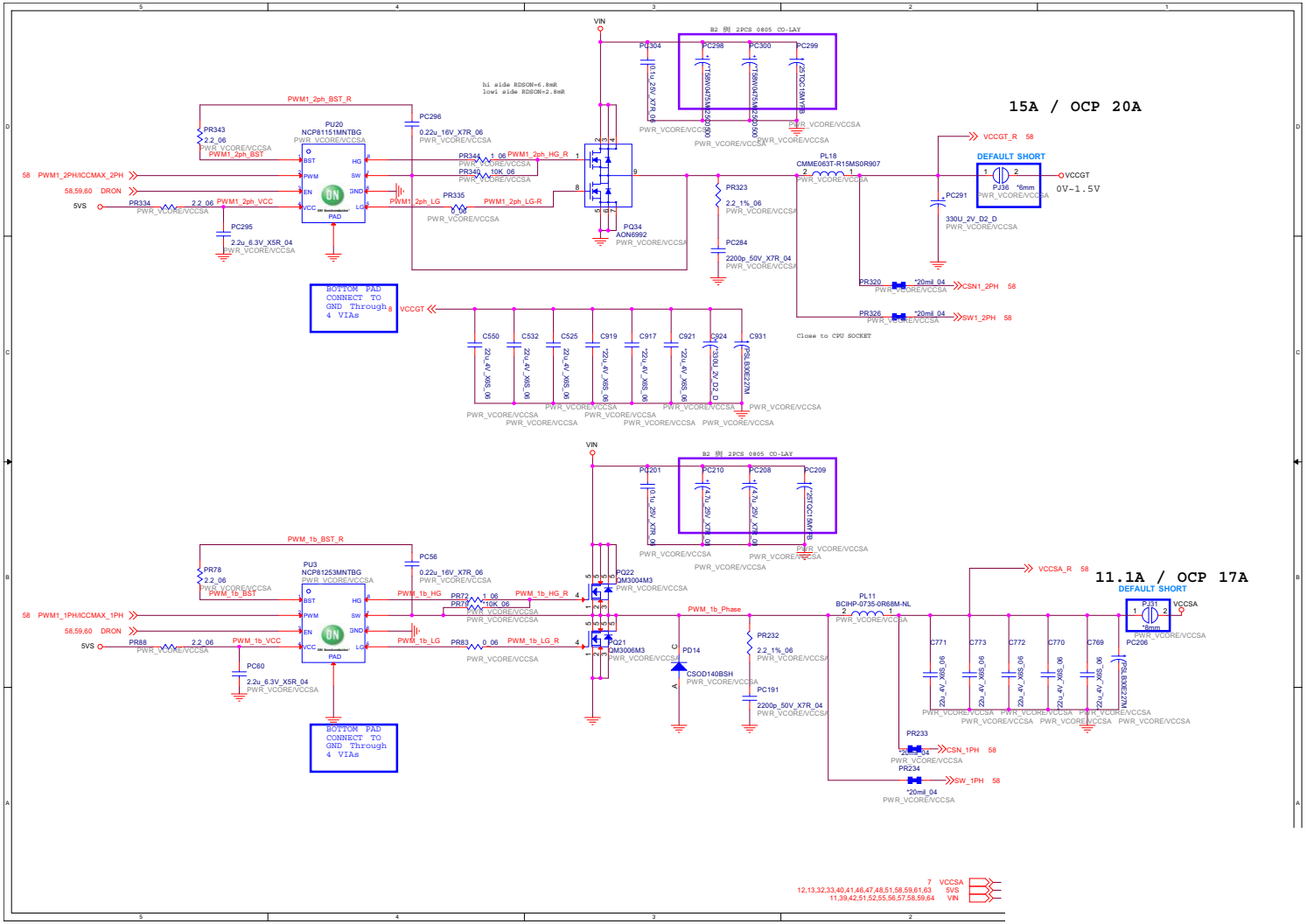

Sheet 60 of 72
VCCGT, VCCSA Output

VNVVDD 1

Sheet 61 of 72
NVVDD 1

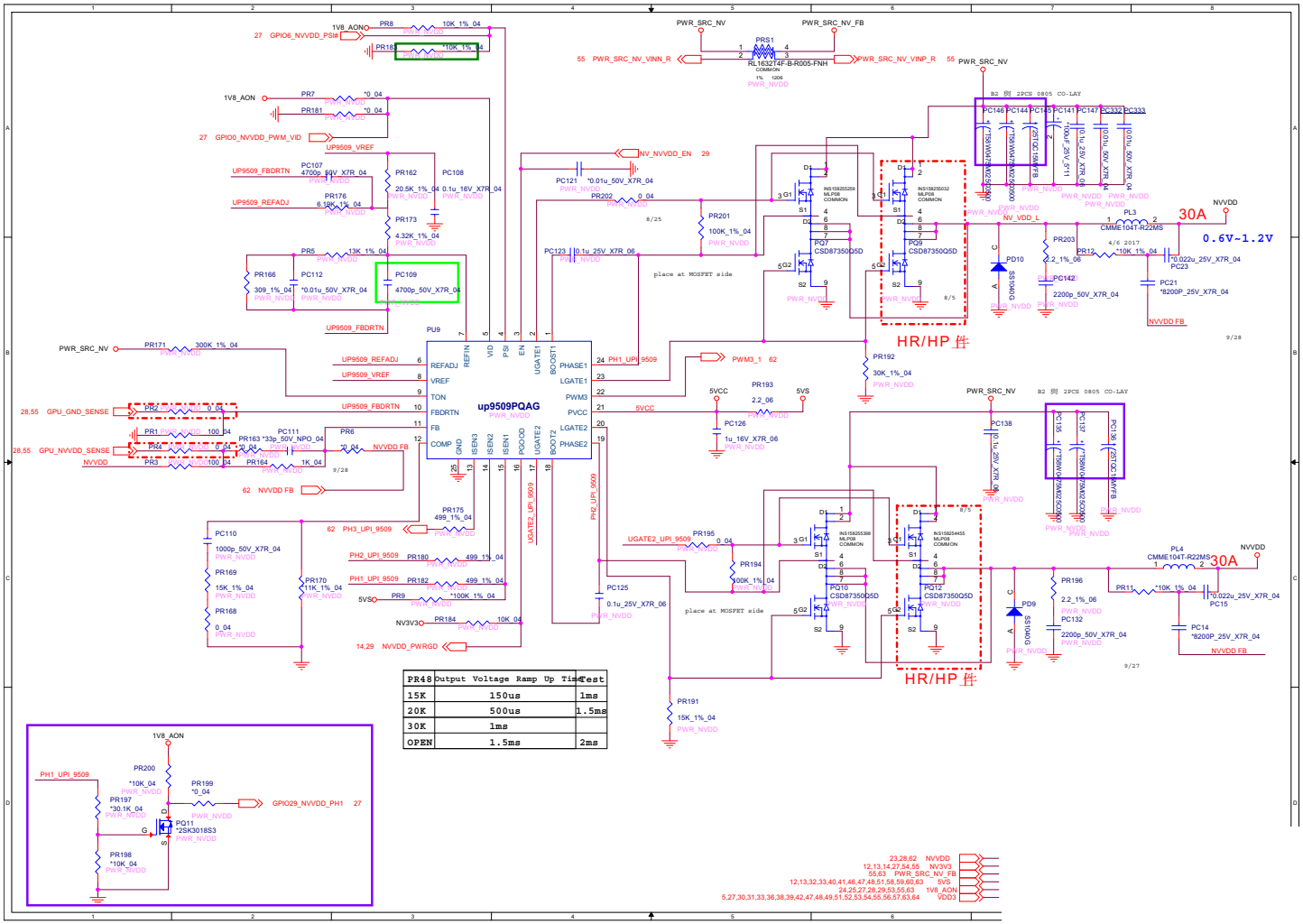

NVVDD 2

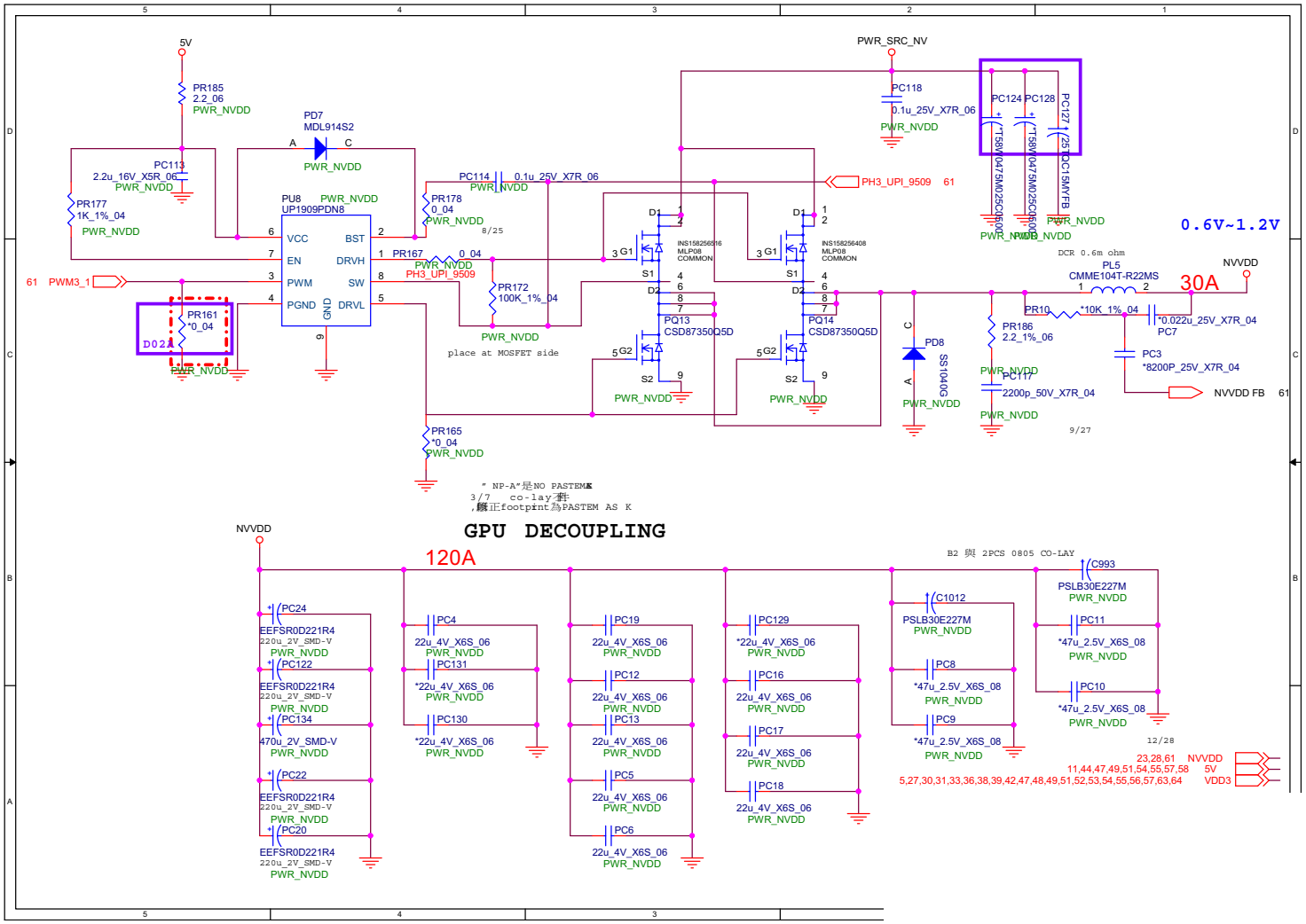

Sheet 62 of 72
NVVDD 2

FBVDDQ

Sheet 63 of 72
FBVDDQ

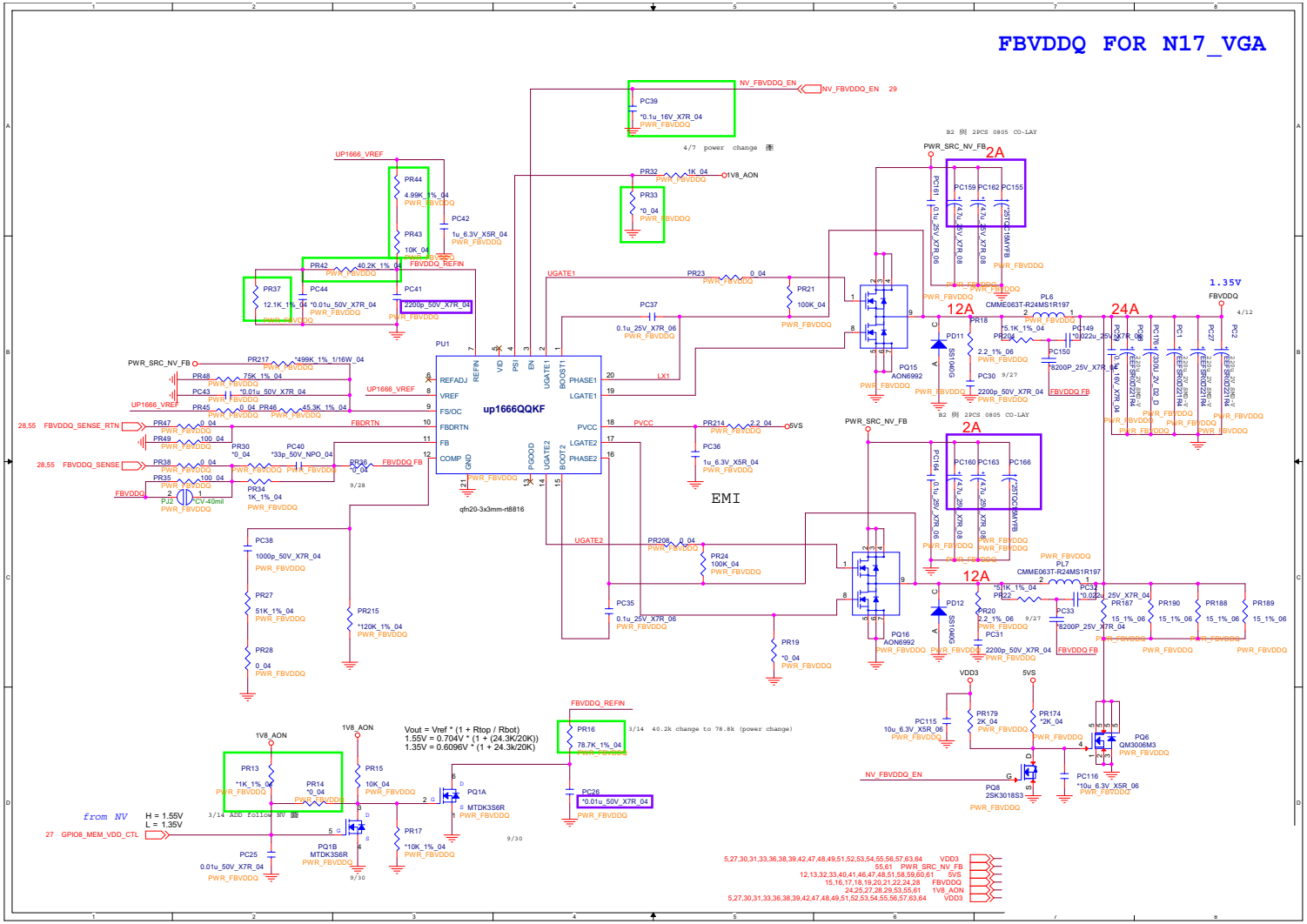

AC_In, Charger

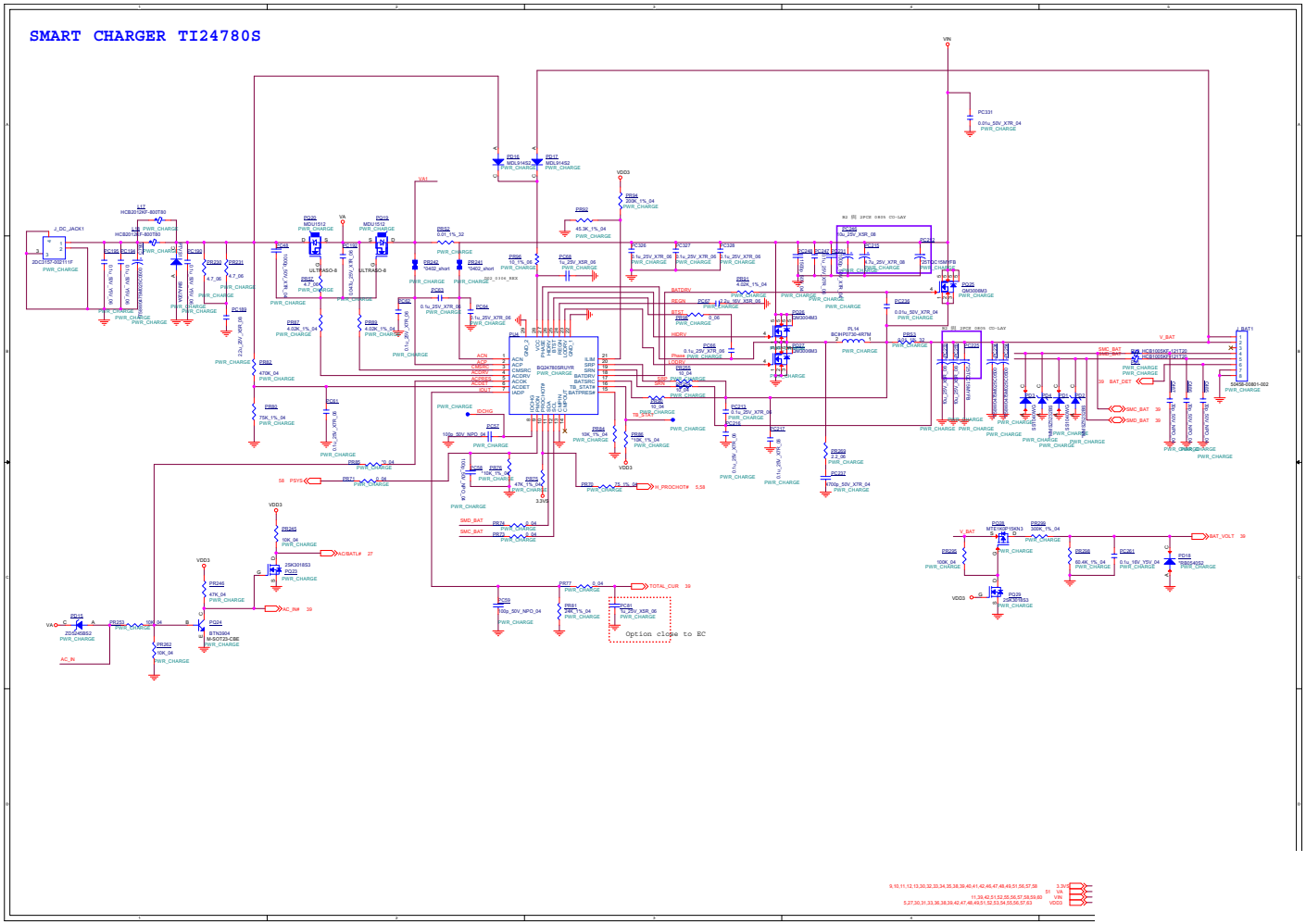

Sheet 64 of 72
AC_In, Charger

LED Board

Sheet 65 of 72
LED Board

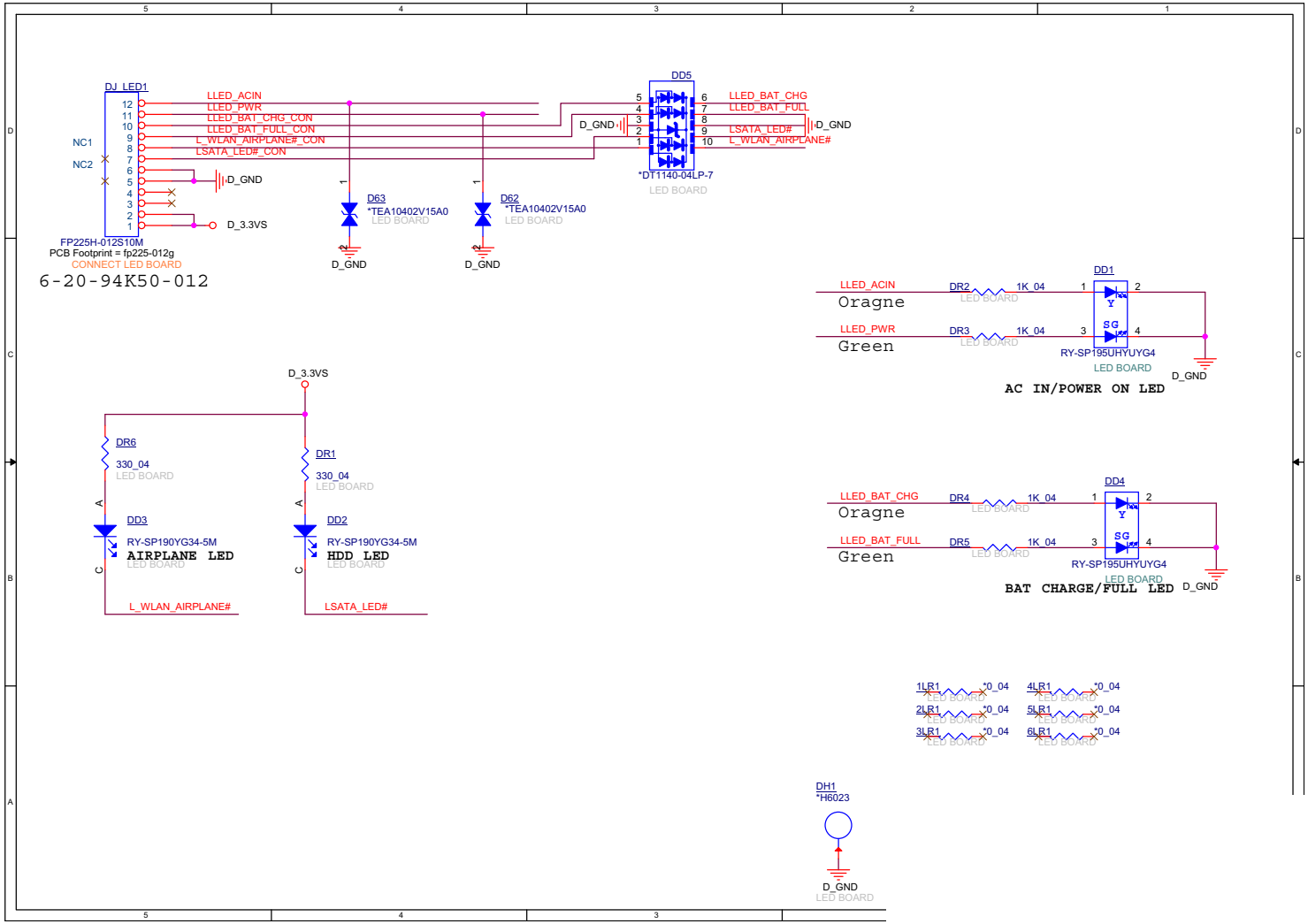

Click Board

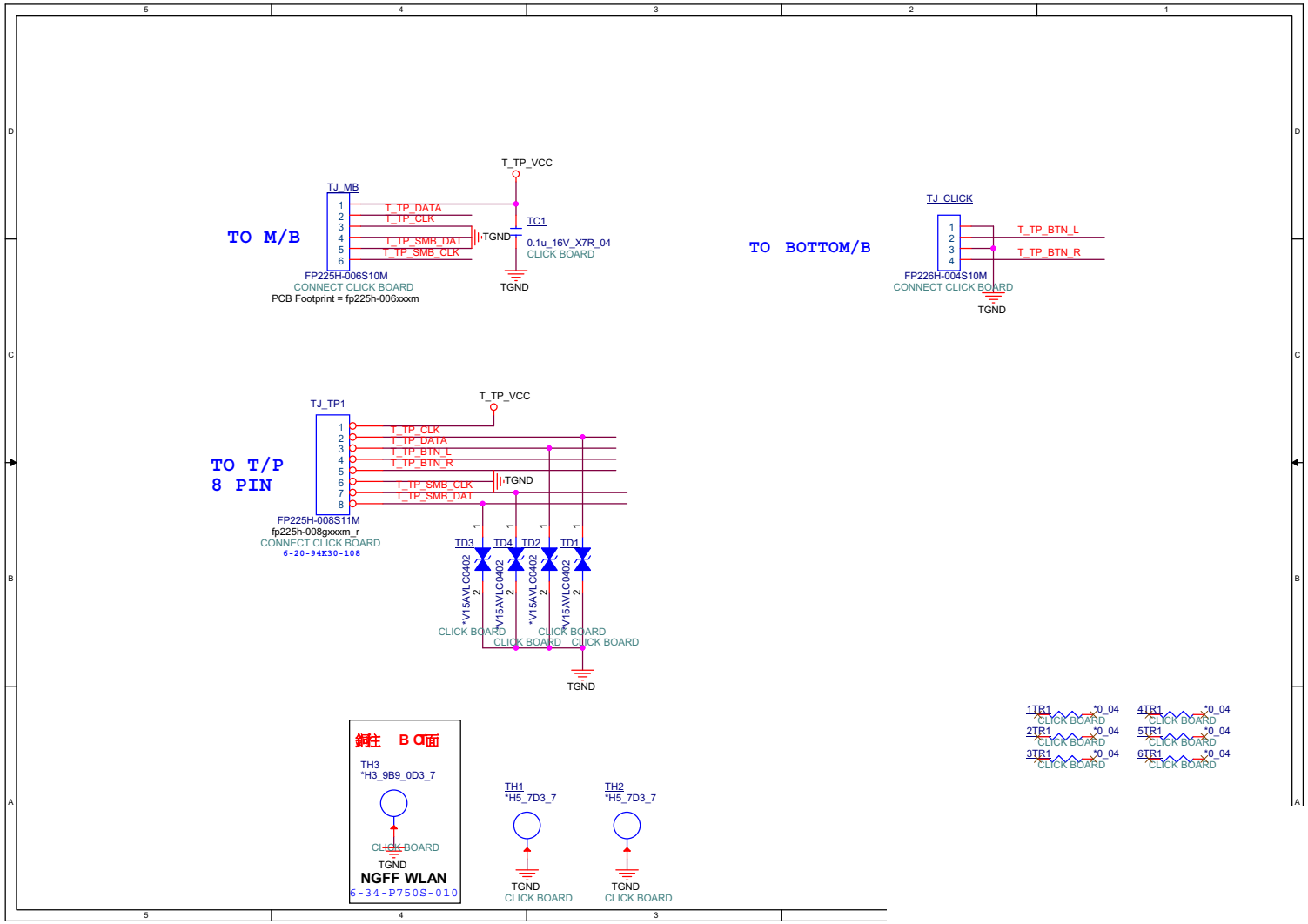

Sheet 66 of 72
Click Board

Reader Board

Sheet 67 of 72
Reader Board

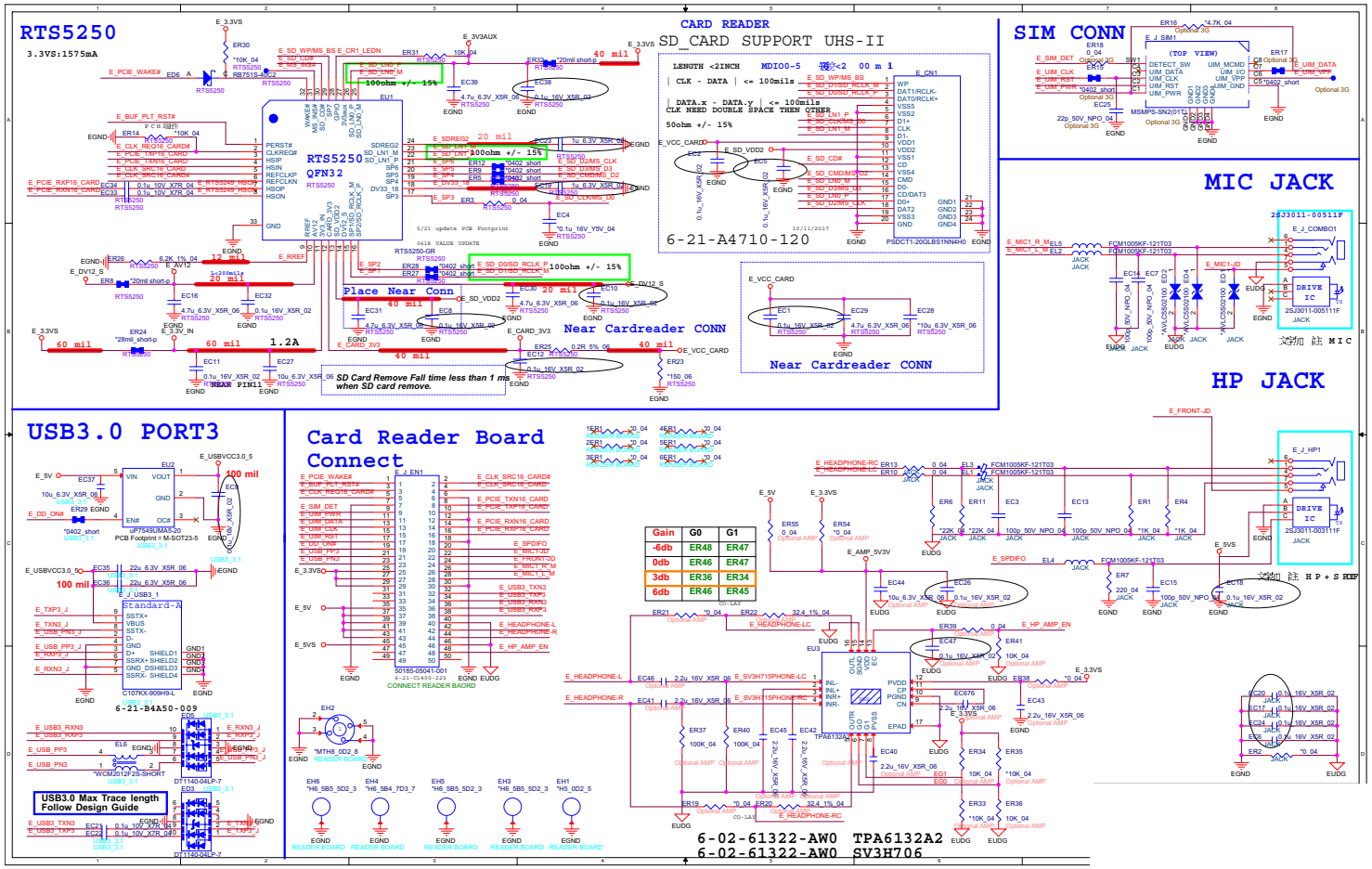

USB Board

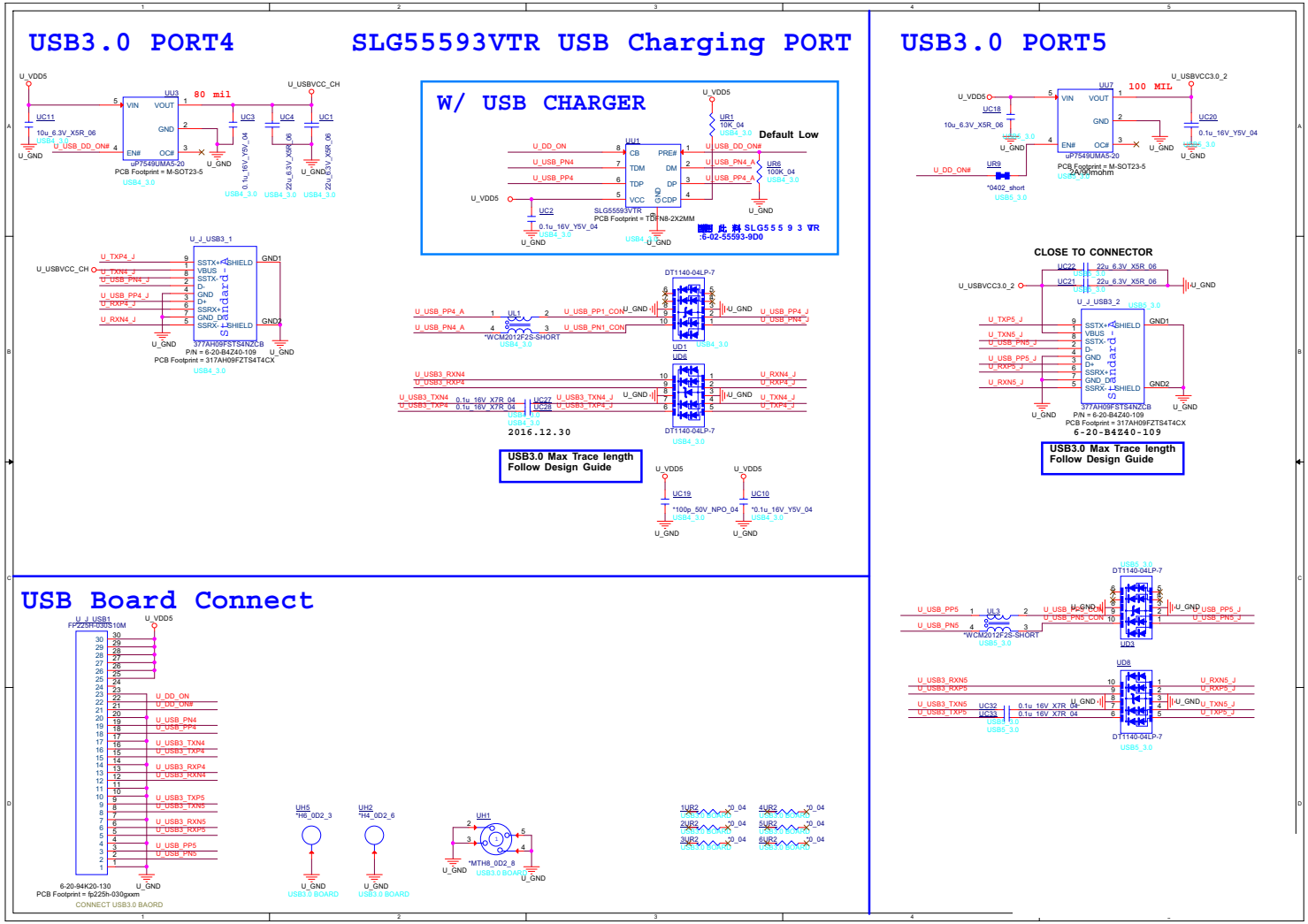

Sheet 68 of 72
USB Board

LAN Board

Sheet 69 of 72
LAN Board

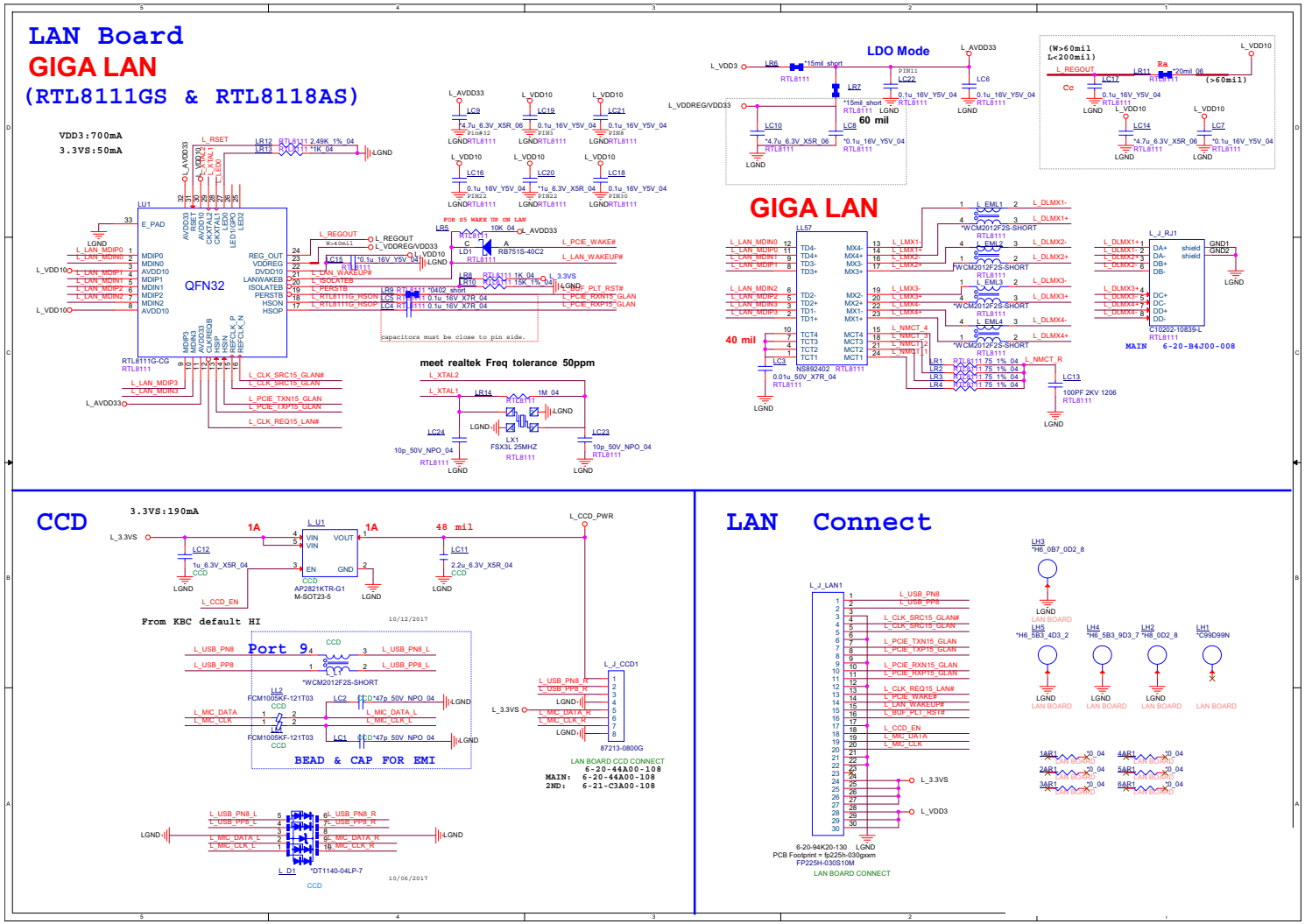

Power Board

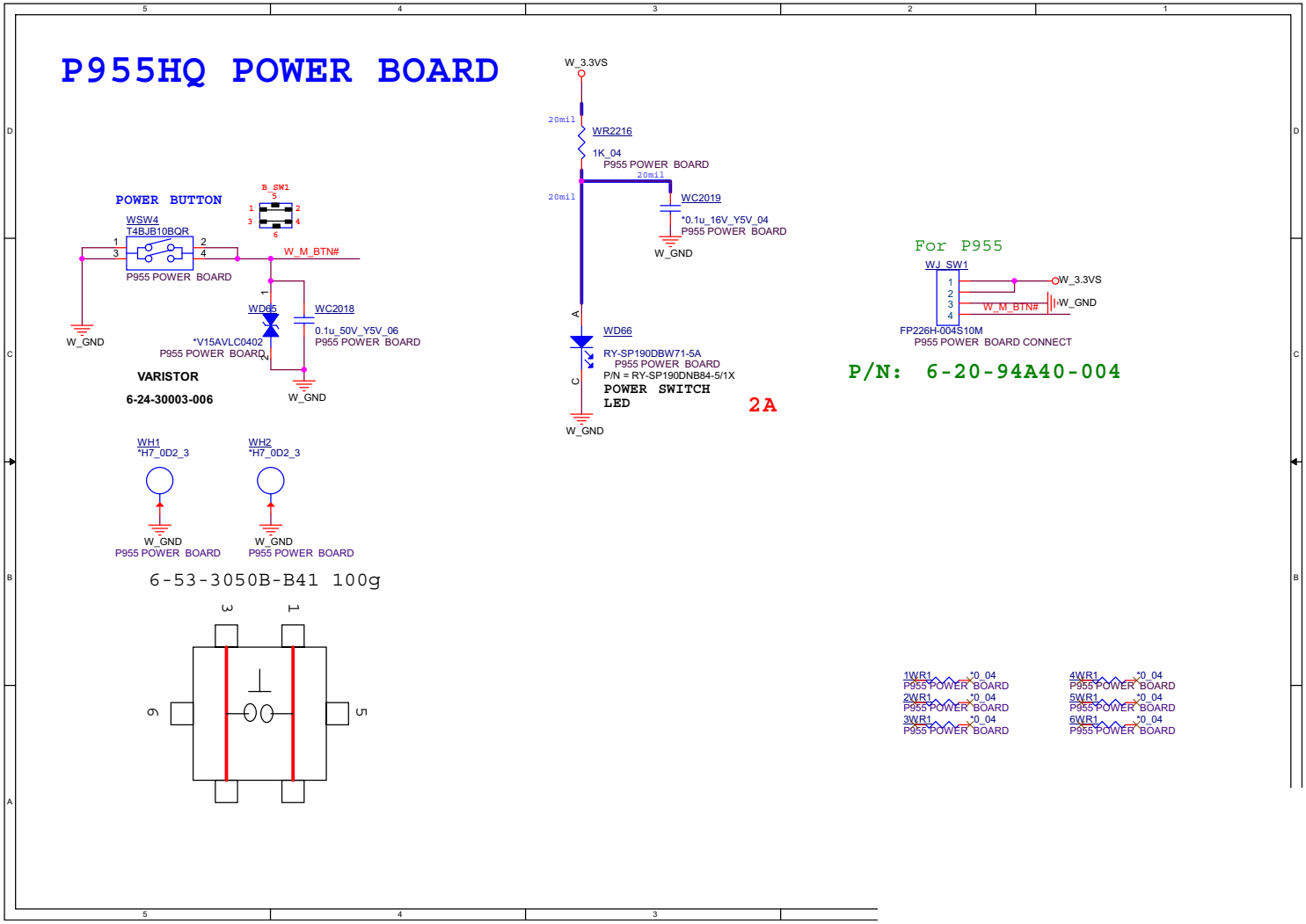

Sheet 70 of 72
Power Board

Power Sequence

Sheet 71 of 72
Power Sequence

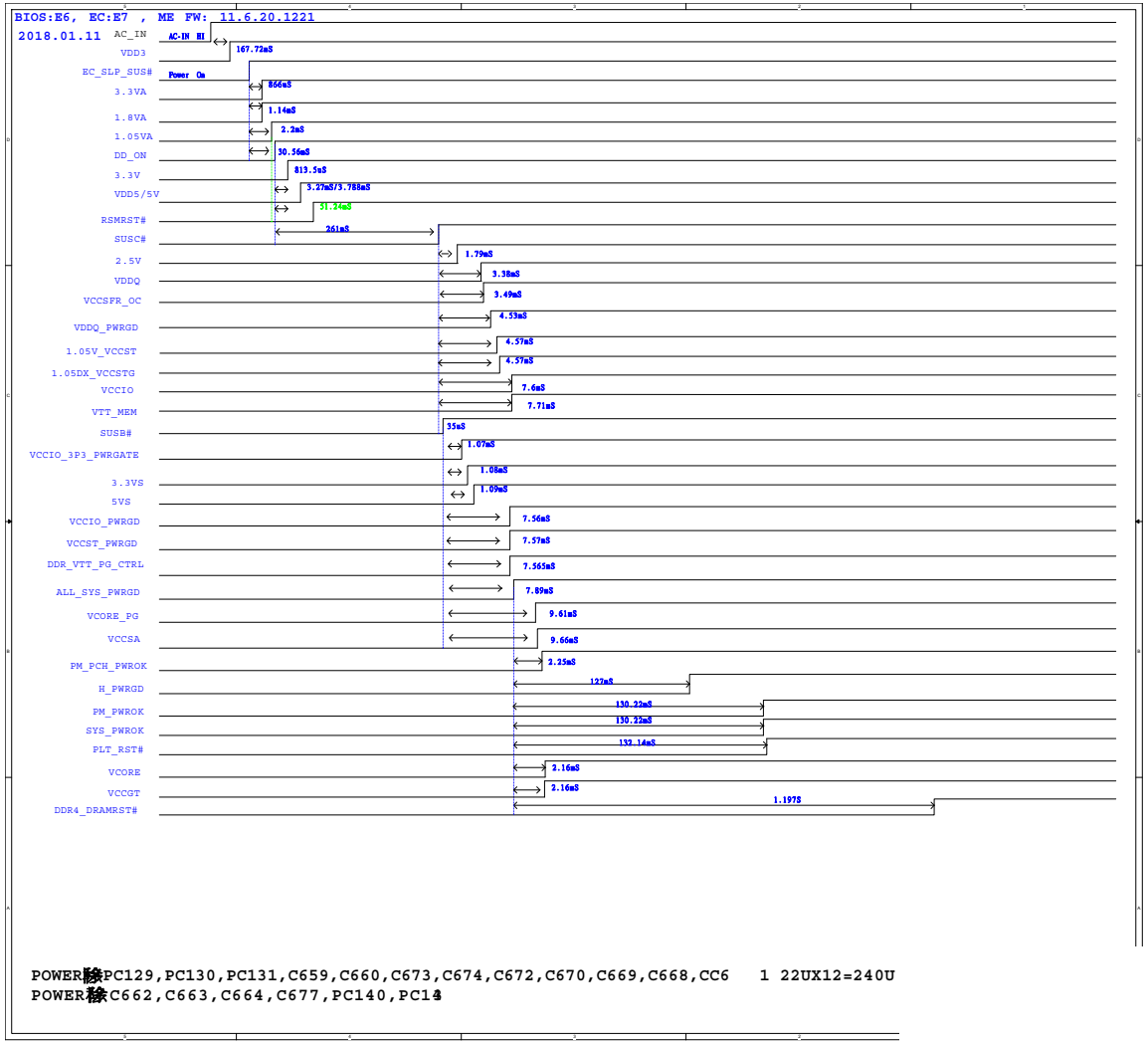

POWER除PC129,PC130,PC131,C659,C660,C673,C674,C672,C670,C669,C668,CC6 1 22UX12=240U
POWER除C662,C663,C664,C677,PC140,PC14

USB Board, Receiver

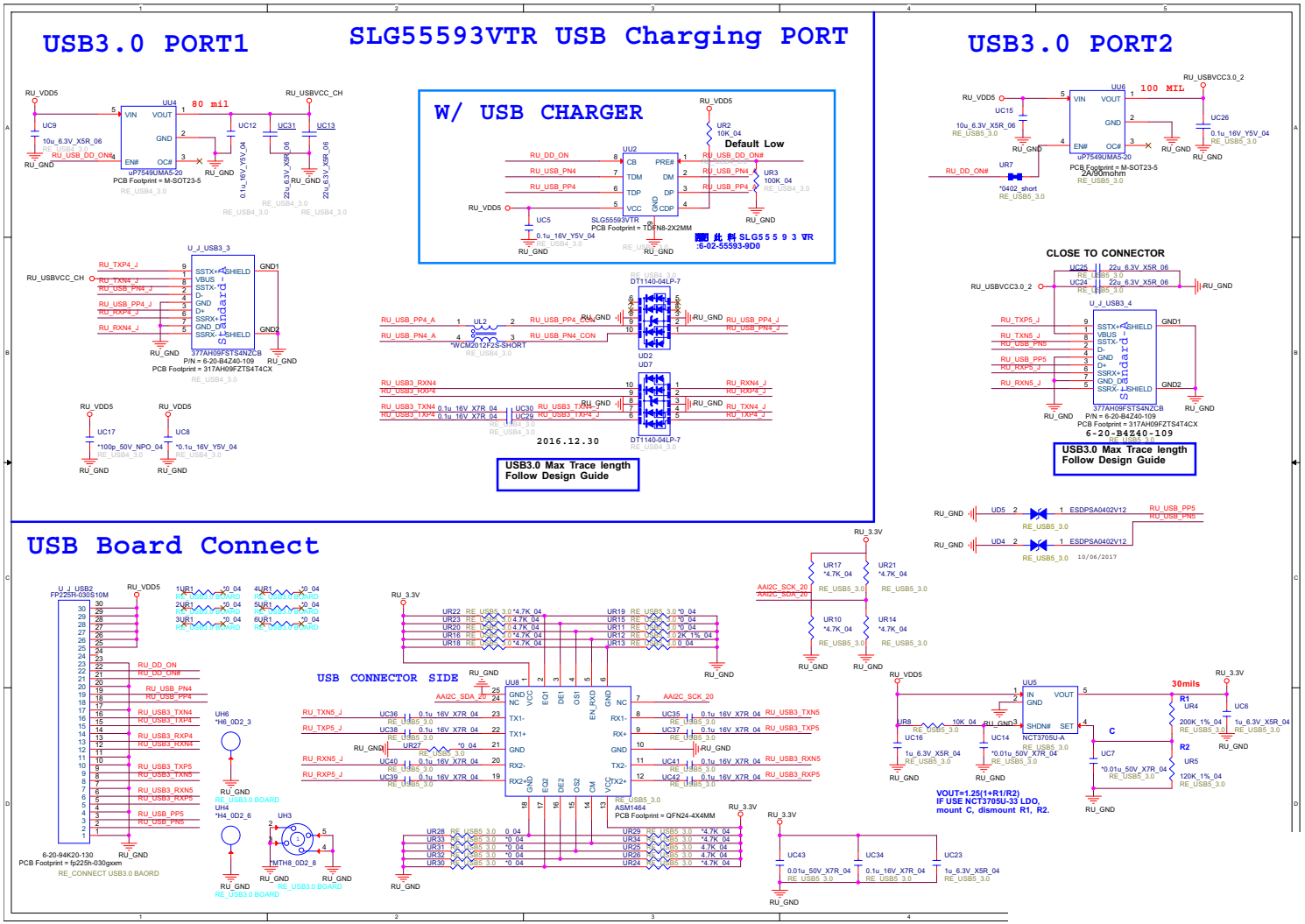

Sheet 72 of 72
USB Board, Receiver

Appendix C:Updating the FLASH ROM BIOS

To update the FLASH ROM BIOS, you must:

- Download the BIOS update from the web site.
- Unzip the files onto a bootable CD/DVD/USB Flash Drive.
- Reboot your computer from an external CD/DVD/USB Flash Drive.
- Use the flash tools to update the flash BIOS using the commands indicated below.
- Restart the computer booting from the HDD and press **F2** at startup enter the BIOS.
- Load setup defaults from the BIOS and save the default settings and exit the BIOS to restart the computer.
- After rebooting the computer you may restart the computer again and make any required changes to the default BIOS settings.

Download the BIOS

1. Go to **www.clevo.com.tw** and point to **E-Services** and click **E-Channel**.
2. Use your user ID and password to access the appropriate download area (BIOS), and download the latest BIOS files (the BIOS file will be contained in a batch file that may be run directly once unzipped) for your computer model (**see sidebar for important information on BIOS versions**).

Unzip the downloaded files to a bootable CD/DVD or USB Flash drive

1. Insert a bootable CD/DVD/USB flash drive into the CD/DVD drive/USB port of the computer containing the downloaded files.
2. Use a tool such as Winzip or Winrar to unzip all the BIOS files and refresh tools to your bootable CD/DVD/USB flash drive (you may need to create a bootable CD/DVD with the files using a 3rd party software).

Set the computer to boot from the external drive

1. With the bootable CD/DVD/USB flash drive containing the BIOS files in your CD/DVD drive/USB port, restart the computer and press **F2** (in most cases) to enter the BIOS.
2. Use the arrow keys to highlight the **Boot** menu.
3. Use the "+" and "-" keys to move boot devices up and down the priority order.
4. Make sure that the CD/DVD drive/USB flash drive is set first in the boot priority of the BIOS.
5. Press **F10** to save any changes you have made and exit the BIOS to restart the computer.

BIOS Version

Make sure you download the latest correct version of the BIOS appropriate for the computer model you are working on.

You should only download BIOS versions that are V1.0X.XX or higher as appropriate for your computer model.

Note that BIOS versions are not backward compatible and therefore **you may not downgrade your BIOS to an older version** after upgrading to a later version (e.g if you upgrade a BIOS to ver 1.0X.05, you **MAY NOT** then go back and flash the BIOS to ver 1.0X.04).

Use the flash tools to update the BIOS

1. Make sure you are not loading any memory management programs such as HIMEM by holding the **F8** key as you see the message "**EFI Shell**". You will then be prompted to give "**Y**" or "**N**" responses to the programs being loaded by EFI Shell. Choose "N" for any memory management programs.
2. You should now see DISK **fsX**:\> (X is the designated drive number for the CD/DVD drive/USB flash drive).
3. **Type the following command**:

   fsX:\> Flash.nsh

4. The utility will then proceed to flash the BIOS.
5. You should then be prompted to press any key to restart the system or turn the power off, and then on again but make sure you remove the CD/DVD/USB flash drive from the CD/DVD drive/USB port before the computer restarts.

Restart the computer (booting from the HDD)

1. With the CD/DVD/USB flash drive removed from the CD/DVD drive/USB port the computer should restart from the HDD.
2. Press **F2** as the computer restarts to enter the BIOS.
3. Use the arrow keys to highlight the **Exit** menu.
4. Select **Load Setup Defaults** (or press **F9**) and select "**Yes**" to confirm the selection.
5. Press **F10** to save any changes you have made and exit the BIOS to restart the computer.

Your computer is now running normally with the updated BIOS

You may now enter the BIOS and make any changes you require to the default settings.