SERVICE MANUAL

notebook

PA70EP6(-G) / PA71EP6(-G)

Notebook Computer

PA70EP6(-G) / PA71EP6(-G)

Service Manual

Notice

The company reserves the right to revise this publication or to change its contents without notice. Information contained herein is for reference only and does not constitute a commitment on the part of the manufacturer or any subsequent vendor. They assume no responsibility or liability for any errors or inaccuracies that may appear in this publication nor are they in anyway responsible for any loss or damage resulting from the use (or misuse) of this publication.

This publication and any accompanying software may not, in whole or in part, be reproduced, translated, transmitted or reduced to any machine readable form without prior consent from the vendor, manufacturer or creators of this publication, except for copies kept by the user for backup purposes.

Brand and product names mentioned in this publication may or may not be copyrights and/or registered trademarks of their respective companies. They are mentioned for identification purposes only and are not intended as an endorsement of that product or its manufacturer.

Version 1.0
May 2018

Trademarks

Intel and Intel Core are trademarks of Intel Corporation.
Windows® is a registered trademark of Microsoft Corporation.
Other brand and product names are trademarks and /or registered trademarks of their respective companies.

HDMI™
HIGH-DEFINITION MULTIMEDIA INTERFACE

About this Manual

This manual is intended for service personnel who have completed sufficient training to undertake the maintenance and inspection of personal computers.

It is organized to allow you to look up basic information for servicing and/or upgrading components of the ***PA70EP6(-G) / PA71EP6(-G)*** series notebook PC.

The following information is included:

Chapter 1, Introduction, provides general information about the location of system elements and their specifications.
Chapter 2, Disassembly, provides step-by-step instructions for disassembling parts and subsystems and how to upgrade elements of the system.

Appendix A, Part Lists
Appendix B, Schematic Diagrams
Appendix C, Updating the FLASH ROM BIOS

IMPORTANT SAFETY INSTRUCTIONS

Follow basic safety precautions, including those listed below, to reduce the risk of fire, electric shock and injury to persons when using any electrical equipment:

1. Do not use this product near water, for example near a bath tub, wash bowl, kitchen sink or laundry tub, in a wet basement or near a swimming pool.
2. Avoid using a telephone (other than a cordless type) during an electrical storm. There may be a remote risk of electrical shock from lightning.
3. Do not use the telephone to report a gas leak in the vicinity of the leak.
4. Use only the power cord and batteries indicated in this manual. Do not dispose of batteries in a fire. They may explode. Check with local codes for possible special disposal instructions.
5. This product is intended to be supplied by a Listed Power Unit as follows:

- AC Input of 100 - 240V, 50 - 60Hz, DC Output of 19V, 10.5A (**200** Watts) minimum AC/DC Adapter.

FCC Statement

This device complies with Part 15 of the FCC Rules. Operation is subject to the following two conditions:
This device may not cause harmful interference.
This device must accept any interference received, including interference that may cause undesired operation.

Instructions for Care and Operation

The notebook computer is quite rugged, but it can be damaged. To prevent this, follow these suggestions:

1. **Don't drop it, or expose it to shock.** If the computer falls, the case and the components could be damaged.

Do not expose the computer to any shock or vibration. 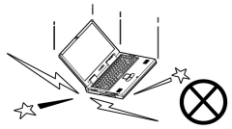	*Do not place it on an unstable surface.* 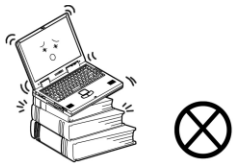	*Do not place anything heavy on the computer.* 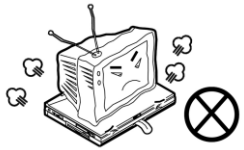

2. **Keep it dry, and don't overheat it.** Keep the computer and power supply away from any kind of heating element. This is an electrical appliance. If water or any other liquid gets into it, the computer could be badly damaged.

Do not expose it to excessive heat or direct sunlight.	*Do not leave it in a place where foreign matter or moisture may affect the system.*	*Don't use or store the computer in a humid environment.* 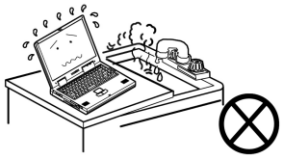	*Do not place the computer on any surface which will block the vents.* 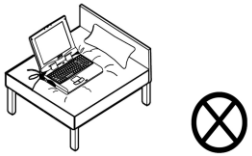

3. **Follow the proper working procedures for the computer**. Shut the computer down properly and don't forget to save your work. Remember to periodically save your data as data may be lost if the battery is depleted.

Do not turn off the power until you properly shut down all programs. 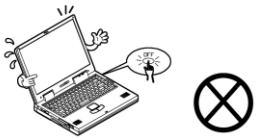	*Do not turn off any peripheral devices when the computer is on.* 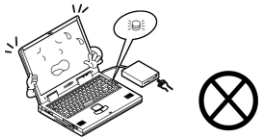	*Do not disassemble the computer by yourself.*	*Perform routine maintenance on your computer.*

4. **Avoid interference.** Keep the computer away from high capacity transformers, electric motors, and other strong magnetic fields. These can hinder proper performance and damage your data.
5. **Take care when using peripheral devices**.

Use only approved brands of peripherals. 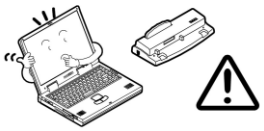	*Unplug the power cord before attaching peripheral devices.* 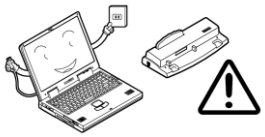

Power Safety

The computer has specific power requirements:

- Only use a power adapter approved for use with this computer.
- Your AC adapter may be designed for international travel but it still requires a steady, uninterrupted power supply. If you are unsure of your local power specifications, consult your service representative or local power company.
- The power adapter may have either a 2-prong or a 3-prong grounded plug. The third prong is an important safety feature; do not defeat its purpose. If you do not have access to a compatible outlet, have a qualified electrician install one.
- When you want to unplug the power cord, be sure to disconnect it by the plug head, not by its wire.
- Make sure the socket and any extension cord(s) you use can support the total current load of all the connected devices.
- Before cleaning the computer, make sure it is disconnected from any external power supplies.

Power Safety Warning

Before you undertake any upgrade procedures, make sure that you have turned off the power, and disconnected all peripherals and cables (including telephone lines and power cord). It is advisable to also remove your battery in order to prevent accidentally turning the machine on.

Do not plug in the power cord if you are wet.	*Do not use the power cord if it is broken.* 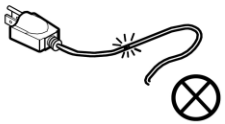	*Do not place heavy objects on the power cord.* 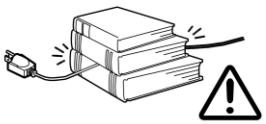

Battery Precautions

- Only use batteries designed for this computer. The wrong battery type may explode, leak or damage the computer.
- Do not continue to use a battery that has been dropped, or that appears damaged (e.g. bent or twisted) in any way. Even if the computer continues to work with a damaged battery in place, it may cause circuit damage, which may possibly result in fire.
- Recharge the batteries using the notebook's system. Incorrect recharging may make the battery explode.
- Do not try to repair a battery pack. Refer any battery pack repair or replacement to your service representative or qualified service personnel.
- Keep children away from, and promptly dispose of a damaged battery. Always dispose of batteries carefully. Batteries may explode or leak if exposed to fire, or improperly handled or discarded.
- Keep the battery away from metal appliances.
- Affix tape to the battery contacts before disposing of the battery.
- Do not touch the battery contacts with your hands or metal objects.

Battery Guidelines

The following can also apply to any backup batteries you may have.

- If you do not use the battery for an extended period, then remove the battery from the computer for storage.
- Before removing the battery for storage charge it to 60% - 70%.
- Check stored batteries at least every 3 months and charge them to 60% - 70%.

Battery Disposal

The product that you have purchased contains a rechargeable battery. The battery is recyclable. At the end of its useful life, under various state and local laws, it may be illegal to dispose of this battery into the municipal waste stream. Check with your local solid waste officials for details in your area for recycling options or proper disposal.

Caution

Danger of explosion if battery is incorrectly replaced. Replace only with the same or equivalent type recommended by the manufacturer. Discard used battery according to the manufacturer's instructions.

Battery Level

Click the battery icon in the taskbar to see the current battery level and charge status. A battery that drops below a level of 10% will not allow the computer to boot up. Make sure that any battery that drops below 10% is recharged within one week.

Related Documents

You may also need to consult the following manual for additional information:

User's Manual on CD/DVD

This describes the notebook PC's features and the procedures for operating the computer and its ROM-based setup program. It also describes the installation and operation of the utility programs provided with the notebook PC.

System Startup

1. Remove all packing materials.
2. Place the computer on a stable surface.
3. Securely attach any peripherals you want to use with the computer (e.g. keyboard and mouse) to their ports.
4. **When first setting up the computer use the following procedure** (as to safeguard the computer during shipping, the battery will be locked to not power the system until first connected to the AC/DC adapter and initially set up as below):
   - Attach the AC/DC adapter cord to the DC-In jack on the left of the computer, then plug the AC power cord into an outlet, and connect the AC power cord to the AC/DC adapter and **leave it there for 6 seconds or longer**.
   - Remove the adapter cord from the computer's DC-In jack, and then plug it back in again; the battery will now be unlocked.
5. Use one hand to raise the lid/LCD to a comfortable viewing angle (do not exceed 135 degrees); use the other hand (as illustrated in Figure 1) to support the base of the computer (**Note**: **Never** lift the computer by the lid/LCD).
6. Press the power button to turn the computer "on".

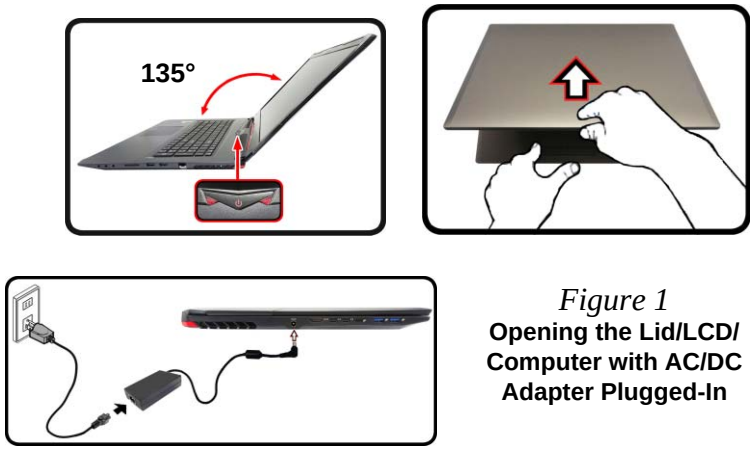

Figure 1
Opening the Lid/LCD/ Computer with AC/DC Adapter Plugged-In

Shut Down

Note that you should always shut your computer down by choosing the **Shut down** command in ***Windows*** (see below). This will help prevent hard disk or system problems.

Click the icon in the **Start Screen** and choose **Shut down** from the menu.

Or

Right-click the **Start button** at the bottom of the **Start Screen** or the **Desktop** and choose **Shut down or sign out > Shut down** from the context menu.

Contents

Introduction 1-1

Overview 1-1
Specifications 1-2
External Locator - Top View with LCD Panel Open 1-4
External Locator - Front & Right Side Views 1-5
External Locator - Left Side & Rear View 1-6
External Locator - Bottom View 1-7
Mainboard Overview - Top (Key Parts) 1-8
Mainboard Overview - Bottom (Key Parts) 1-9
Mainboard Overview - Top (Connectors) 1-10
Mainboard Overview - Bottom (Connectors) 1-11

Disassembly 2-1

Overview 2-1
Maintenance Tools 2-2
Connections 2-2
Maintenance Precautions 2-3
Disassembly Steps 2-4
Removing the Keyboard 2-5
Removing the Battery 2-6
Removing the Hard Disk Drive 2-8
Removing the System Memory (RAM) 2-10
Removing the M.2 SSD Module 2-11
Removing the Wireless LAN Module 2-14
Wireless LAN, Combo Module Cables 2-15
Removing the CCD 2-16
Removing the LCD Module 2-18

Part Lists A-1

Part List Illustration Location A-2
Top A-3
Bottom A-4
Main Board A-5
HDD A-6
LCD A-7

Schematic Diagrams.....B-1

System Block Diagram B-2
Processor 1/5 .....B-3
Processor 2/5 .....B-4
Processor 3/5 .....B-5
Processor 4/5 .....B-6
Processor 5/5 .....B-7
DDR4 CHA SO-DIMM_0 .....B-8
DDR4 CHB SO-DIMM_0 .....B-9
PS8331B B-10
Panel, PWR_NV3V3 .....B-11
Mini DP Port (Back) B-12
Mini DP Port (Front) B-13
HDMI Connector B-14
VGA PCI Express B-15
GPU Frame Buffer Partition B-16
Frame Buffer Partition A B-17
Frame Buffer Partition B B-18
Frame Buffer Partition A_B B-19
GPU Frame Buffer C/D B-20
Frame Buffer Partition C B-21
Frame Buffer Partition D B-22
Frame Buffer Partition C_D B-23
Straps and XTAL B-24
IFP I/O Interface B-25
Misc - GPIO, I2C and ROM B-26

VDD B-27
Decoupling B-28
GPU GND B-29
GPU PWR CTRL, Level Shift B-30
PCH 1/5 ..... B-31
PCH 2/5 ..... B-32
PCH 3/5 ..... B-33
PCH 4/5 ..... B-34
PCH 5/5 ..... B-35
KBC IT8587 ..... B-36
RGB and White KB LED B-37
M.2 SSD B-38
M.2 WLAN+BT B-39
Audio Codec ALC892 ..... B-40
Audio Subwoofer B-41
Audio Amplifier B-42
AR_TBT B-43
AR Power B-44
TPS65982ABZQZ B-45
ASM1543 Type-C B-46
PS8338B B-47
LAN RTL8111G B-48
Conn_CCD, TP, FP, HDD, TPM B-49
Conn to Extend Board B-50
Conn, Fan B-51
5VS, 3.3V, 3.3VA, 3.3VS B-52
VCCST, VCCSTG, VCCSFR, NV3V3 ..... B-53
VDD3, VDD5 ..... B-54
DDR 1.2V, 0.6VS, 2.5V B-55
1.8VA, 1.05VA B-56
Power VCCIO B-57
VCore, VCCGT, VCCSA 1/3 ..... B-58
VCore, VCCGT, VCCSA 2/3 ..... B-59
VCore, VCCGT, VCCSA 3/3 ..... B-60
AC_In, Charger B-61
1V8_AON/RUN, PEX_VDD B-62
NVVDDS B-63
NVVDD Phase 1 & 2 ..... B-64
NVVDD Phase 3 ..... B-65
FBVDDQ B-66
LED Board B-67
LID Board B-68
DC Board B-69
Power Board B-70
Click Board B-71
Audio Board B-72
LAN Board B-73
USB Board B-74
USB Board B-75
Card Reader B-76
USB Port B-77
USB Port B-78

pdating the FLASH ROM BIOS..... C-1

Download the BIOS C-1
Unzip the downloaded files to a bootable CD/DVD or
USB Flash drive C-1
Set the computer to boot from the external drive C-1
Use the flash tools to update the BIOS C-2
Restart the computer (booting from the HDD) C-2

Chapter 1: Introduction

Overview

This manual covers the information you need to service or upgrade the ***PA70EP6(-G) / PA71EP6(-G)*** series notebook computer. Information about operating the computer (e.g. getting started, and the *Setup* utility) is in the *User's Manual*. Information about dri-vers (e.g. VGA & audio) is also found in the *User's Manual*. The manual is shipped with the computer.

Operating systems (e.g. *Windows 10*, etc.) have their own manuals as do application softwares (e.g. word processing and database programs). If you have questions about those programs, you should consult those manuals.

The ***PA70EP6(-G) / PA71EP6(-G)*** series notebook is designed to be upgradeable. See ***Disassembly on page 2 - 1*** for a detailed description of the upgrade procedures for each specific component. Please take note of the warning and safety information indicated by the "" symbol.

The balance of this chapter reviews the computer's technical specifications and features.

Specifications

Latest Specification Information

The specifications listed here are correct at the time of sending them to the press. Certain items (particularly processor types/speeds) may be changed, delayed or updated due to the manufacturer's release schedule. Check with your service center for more details.

CPU Speed & Computer in DC Mode

Note that when the computer is in DC mode (powered by the battery only) the CPU may not run at full speed. This is a design feature implemented in order to protect the battery.

Processor Options

i7-8750H (2.20GHz)

6MB Smart Cache, **14nm**, DDR4-2666MHz, TDP 45W

i5-8300H (2.30GHz)

6MB Smart Cache, **14nm**, DDR4-2666MHz, TDP 45W

Core Logic

Intel® HM370 Express Chipset

LCD Options

17.3" (43.94cm), 16:9, UHD (3840x2160)/*QHD (2560x1440)/FHD (1920x1080)

***Note:** QHD panels are available for systems with NVIDIA® G-SYNC™Technology only

BIOS

AMI BIOS (128Mb SPI Flash-ROM)

Security

Security (Kensington® Type) Lock Slot

BIOS Password

Intel PTT for Systems Without TPM Hardware

(**Factory Option**) TPM 2.0

(**Factory Option**) Fingerprint Reader Module

Storage

One changeable 2.5" (6cm) **7.0mm/9.5mm (h) SATA** (Serial) Hard Disk Drive/Solid State Drive (SSD)

(**Factory Option**) **Two SATA** M.2 2280 SSDs supporting RAID level 0/1

or

(**Factory Option**) **Two PCIe Gen3 x4** M.2 2280 SSDs

Memory

Dual Channel DDR4

Two 260 Pin SO-DIMM Sockets

Supporting **DDR4 2400MHz** or **DDR4 2666MHz** (Depending on CPU Type) Memory Modules

Memory Expandable from **8GB** (**minimum**) up to **32GB** (**maximum**)

Compatible with 4GB, 8GB or 16GB Modules

Supports XMP 3000MHz (XMP support depends on processor)

SO-DIMM Memory Types

All SO-DIMM memory modules installed in the system should be identical (the same size and brand) in order to prevent unexpected system behavior.

Do not mix SO-DIMM memory module sizes and brands otherwise unexpected system problems may occur.

Pointing Device

(**Factory Option**) Built-In Secure Pad (with Microsoft PTP Multi Gesture & Scrolling Functionality)

Or

(**Factory Option**) Built-in Touchpad ((with Microsoft PTP Multi Gesture & Scrolling Functionality)

Keyboard

Full Color Illuminated Full-size Winkey Keyboard (with numeric keypad)

Or

(**Factory Option**) **Full Color Per Key Illuminated** Full-size Winkey Keyboard (with numeric keypad)

Video Adapter Options

Microsoft Hybrid Graphics Mode

Supports up to 4 Active Displays

Supports NVIDIA Surround View via HDMI x 1 and MiniDP x2

Intel Integrated GPU

Intel® HD Graphics 630

Dynamic Frequency

Intel Dynamic Video Memory Technology

Microsoft DirectX®12 Compatible

NVIDIA® Discrete GPU

NVIDIA® GeForce GTX 1060

6GB GDDR5 Video RAM

Microsoft DirectX®12 Compatible

Supports GPU Overclocking

Audio

High Definition Audio Compliant Interface

S/PDIF Digital Output

Sound BlasterX® Pro-Gaming 720°

Built-In Array Microphone

Two Speakers

One Sub-Woofer

Note: External 5.1CH Audio Output Supported by 2-in1 Audio, Microphone-In and Headphone-Out Jacks

Card Reader

Embedded Multi-In-1 Push-Push Card Reader

MMC (MultiMedia Card)/RS MMC

SD (Secure Digital)/Mini SD/SDHC/ SDXC (up to UHS-II)

Communication

Built-In 10/100/1000Mb Base-TX Ethernet LAN

2.0M FHD PC Camera Module

WLAN/ Bluetooth M.2 Modules:

(**Factory Option**) Intel® Dual Band Wireless-AC 9260 Wireless LAN (**802.11ac**) + Bluetooth

(**Factory Option**) Intel® Dual Band Wireless-AC 9560 Wireless LAN (**802.11ac**) + Bluetooth

(**Factory Option**) Intel® Dual Band Wireless-AC 9462 Wireless LAN (**802.11ac**) + Bluetooth

(**Factory Option**) Qualcomm® Atheros Killer™ Dual Band Wireless-AC 1550i Wireless LAN (**802.11ac**) + Bluetooth

M.2 Slots

Slot WLAN for **Combo WLAN and Bluetooth** Module

Slot SSD1 for **SATA** or **PCIe Gen3 x4 SSD**

Slot SSD2 for **SATA** or **PCIe Gen3 x4 SSD**

Intel® Optane™ SSD Module Installation

Service personnel please note that **Intel® Optane™ modules must be installed in the SSD1 slot**.

Interface

One USB 3.1 Gen 2 Type-C Port*

**The maximum amount of current supplied by USB Type-C ports is 500mA (USB 2.0)/900mA (USB 3.1).*

Or

(**Factory Option**) One Thunderbolt 3 Port (Type-C)

Two USB USB 3.1 Gen 2 Type-A Ports

Two USB 3.0 (USB 3.1 Gen 1) Type-A Ports (Including one AC/DC Powered USB port)

Two Mini DisplayPorts (1.3)

One HDMI-Out Port

One 2-In-1 Audio Jack (Line-Out & S/PDIF-Out (Optical) Combo Jack)

One Microphone-In Jack

One Headphone-Out Jack

One RJ-45 LAN Jack

One DC-In Jack

Environmental Spec

Temperature

Operating: 5°C - 35°C

Non-Operating: -20°C - 60°C

Relative Humidity

Operating: 20% - 80%

Non-Operating: 10% - 90%

Power

Embedded 4-Cell Polymer Battery Pack, 66WH

Full Range AC/DC Adapter

AC Input: 100 - 240V, 50 - 60Hz

DC Output: 19V, 10.5A (**200W**)

Dimensions & Weight

418.5mm (w) * 287mm (d) * 24.9mm (h)

3.0kg (Barebone with 66WH Battery)

External Locator - Top View with LCD Panel Open

Figure 1
Top View

1. PC Camera
2. *PC Camera LED
   When the PC camera is in use, the LED will be illuminated.
3. Built-In Array Microphone
4. LCD
5. Speakers
6. Power Button
7. Keyboard
8. Touchpad & Buttons
9. Fingerprint Reader (**Optional**)

External Locator - Front & Right Side Views

FRONT VIEW

Figure 2
Front View

1. LED Indicator

RIGHT SIDE VIEW

Figure 3
Right Side View

1. Headphone-Out Jack
2. Microphone-In Jack
3. Line & S/PDIF Combo Jack
4. Multi-in-1 Card Reader
5. USB 3.0 (USB 3.1 Gen 1) Port
6. *Powered USB 3.0 (USB 3.1 Gen 1) Port
7. RJ-45 LAN Jack
8. Security Lock Slot

External Locator - Left Side & Rear View

Figure 4
Left Side View

1. Vent
2. DC-In Jack
3. HDMI-Out Port
4. Mini Display Port 1
5. Mini Display Port 2
6. USB 3.1 Gen 2 Type-C Ports
7. USB 3.0 (USB 3.1 Gen 1) Ports

LEFT SIDE VIEW

Figure 5
Rear View

1. Vent

REAR VIEW

External Locator - Bottom View

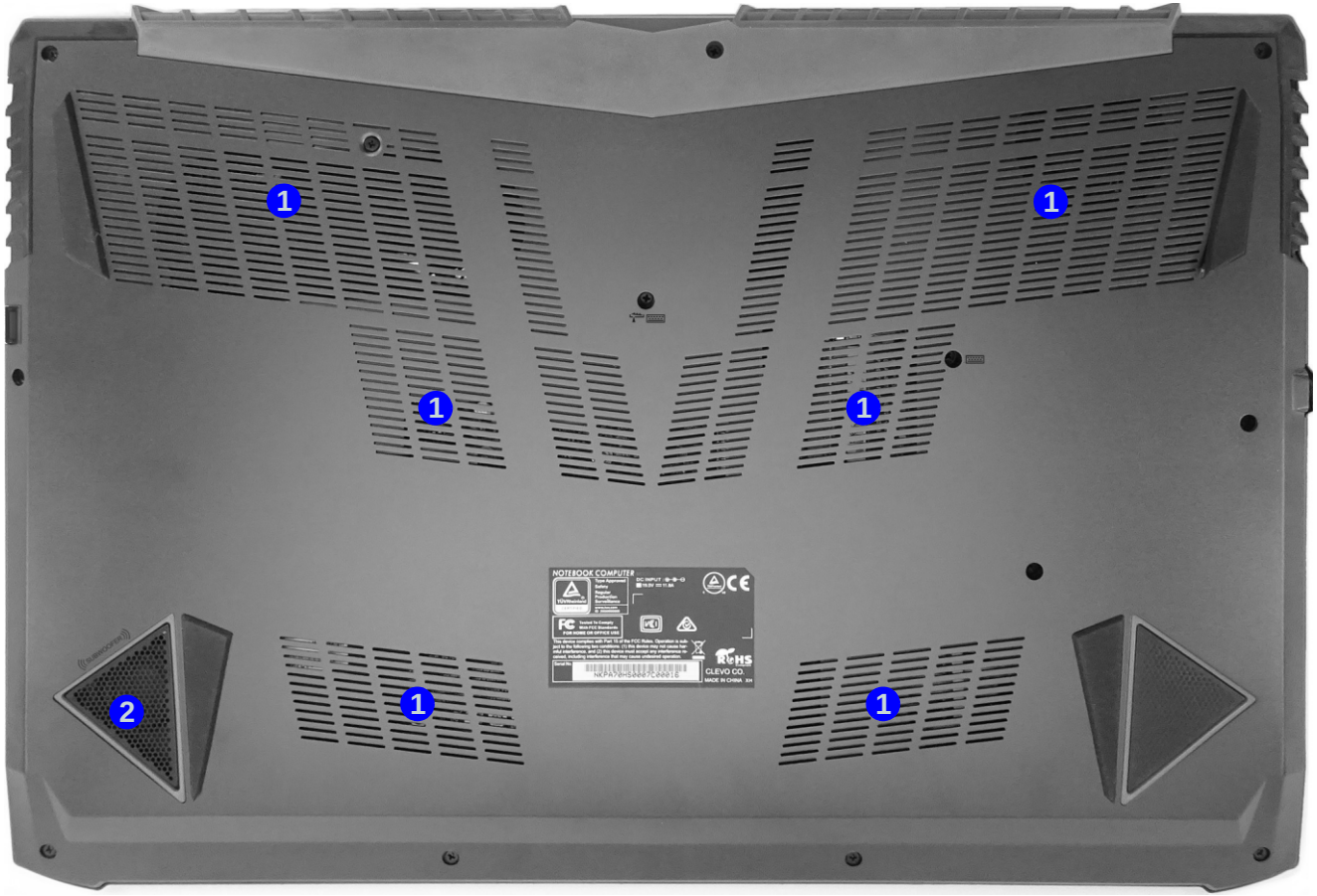

Figure 6
Bottom View

1. Vent
2. Sub Woofer

Overheating

To prevent your computer from overheating, make sure nothing blocks any vent while the computer is in use.

Figure 7
Mainboard Top Key Parts

Mainboard Overview - Top (Key Parts)

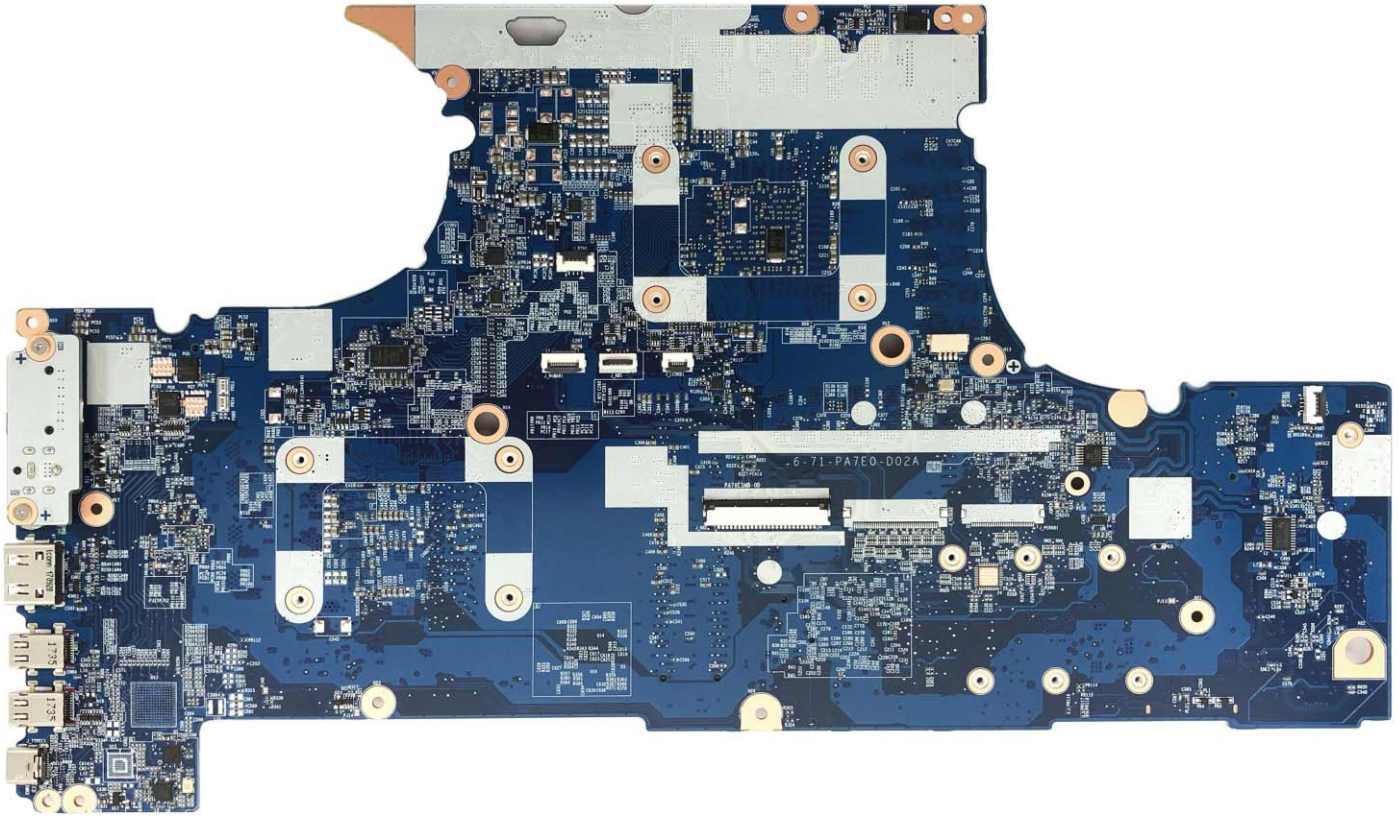

Mainboard Overview - Bottom (Key Parts)

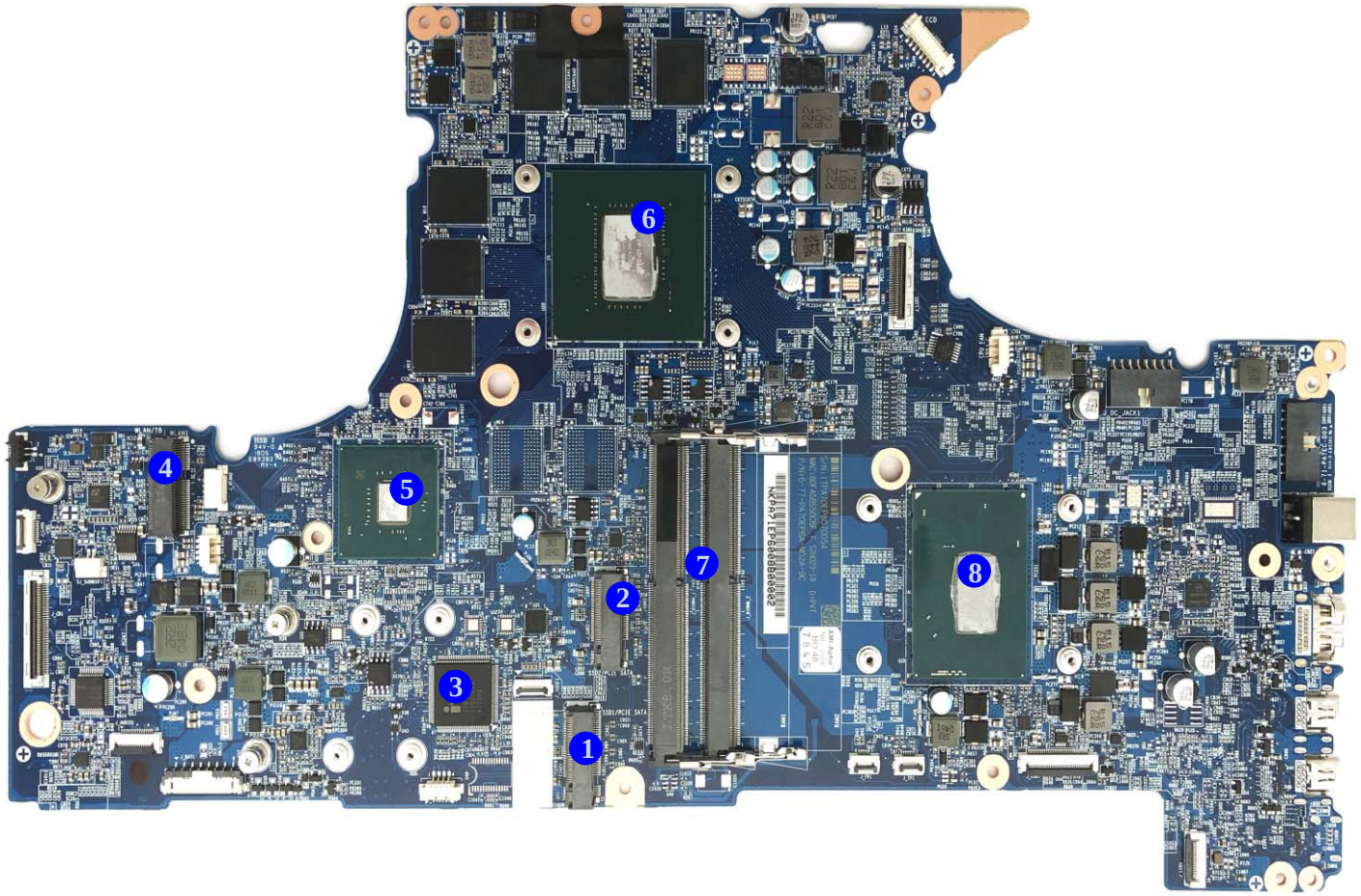

Figure 8
Mainboard Bottom Key Parts

1. Mini-Card Connector (M.2 SSD Module)
2. Mini-Card Connector (M.2 SSD Module)
3. KBC-ITE IT8587
4. Mini-Card Connector (WLAN Module)
5. PCH
6. GPU-GTX1060
7. Memory Slots DDR4 SO-DIMM
8. CPU

Mainboard Overview - Top (Connectors)

Figure 9
Mainboard Top Connectors

1. HDMI Port
2. Mini Display Ports
3. USB 3.1 Gen 2 Type-C Port
4. Power Connector
5. RGB LED KB Connector
6. RGB LED KB Connector
7. White LED KB Connector
8. Keyboard Cable Connector
9. LID Connector

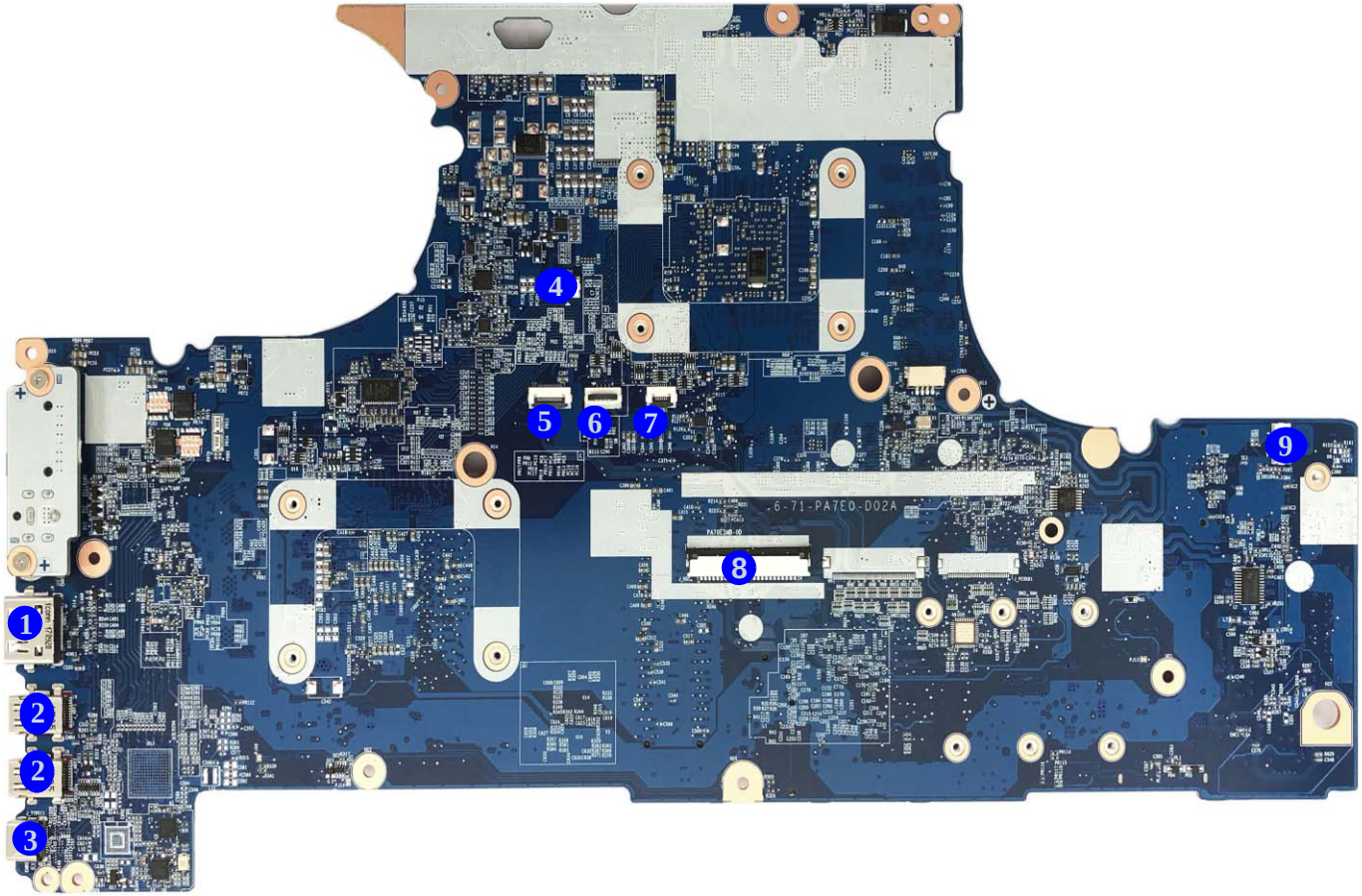

Mainboard Overview - Bottom (Connectors)

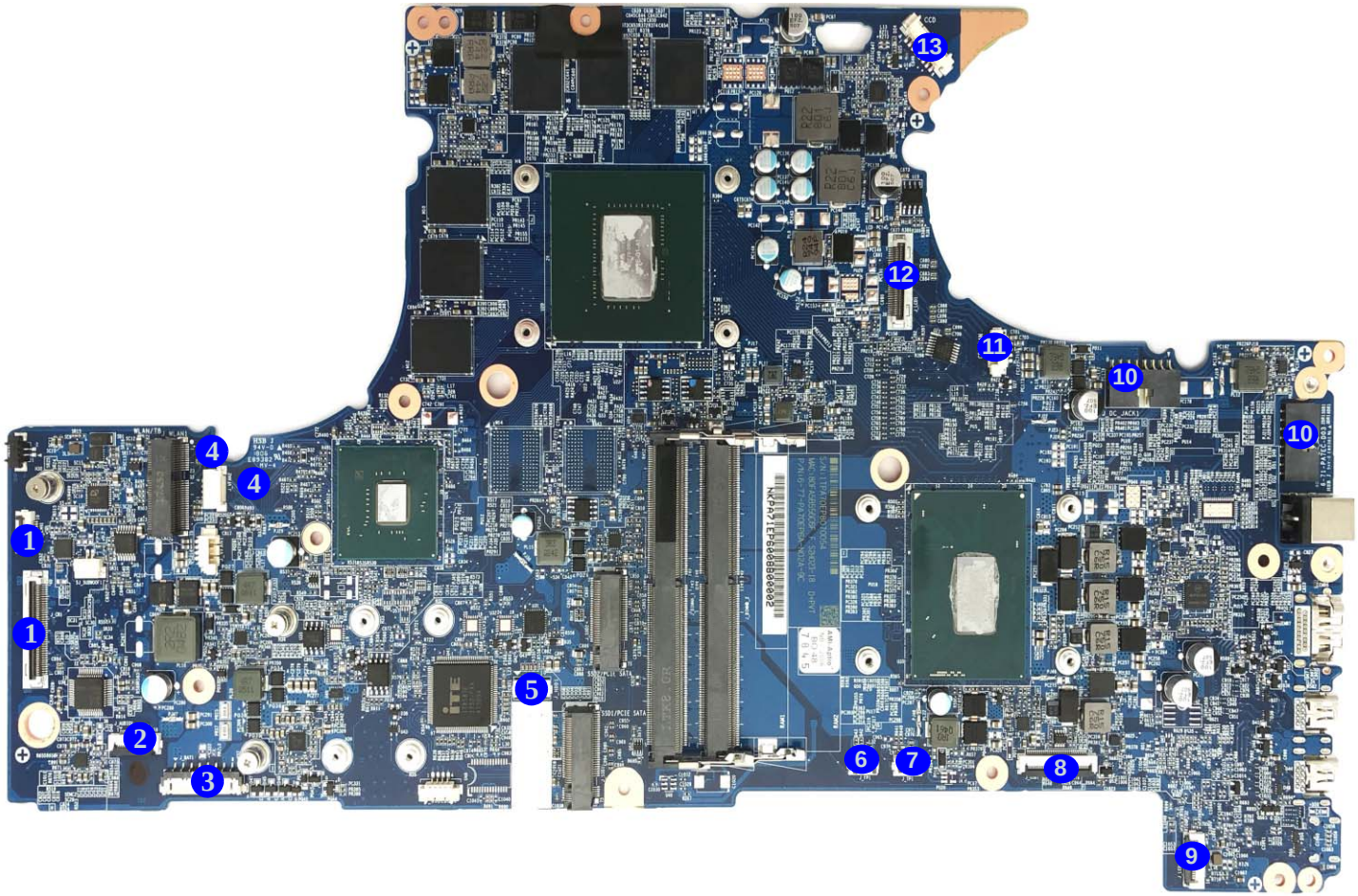

Figure 10
Mainboard Bottom Connectors

1. Card Reader Board Connector
2. Audio Board Connector
3. Battery Connector
4. VGA Fan Connector
5. HDD Cable Connector
6. FP Cable Connector
7. Click Board Connector
8. USB Board Connector
9. LED Board Connector
10. DC Board Connector
11. CPU Fan Connector
12. LCD Connector
13. CCD Connector

Chapter 2: Disassembly

Overview

This chapter provides step-by-step instructions for disassembling the ***PA70EP6(-G) / PA71EP6(-G)*** series notebook's parts and subsystems. When it comes to reassembly, reverse the procedures (unless otherwise indicated).

We suggest you completely review any procedure before you take the computer apart.

Procedures such as upgrading/replacing the RAM, optical device and hard disk are included in the User's Manual but are repeated here for your convenience.

To make the disassembly process easier each section may have a box in the page margin. Information contained under the figure # will give a synopsis of the sequence of procedures involved in the disassembly procedure. A box with a lists the relevant parts you will have after the disassembly process is complete. **Note**: The parts listed will be for the disassembly procedure listed ONLY, and not any previous disassembly step(s) required. Refer to the part list for the previous disassembly procedure. The amount of screws you should be left with will be listed here also.

A box with a will also provide any possible helpful information. A box with a contains warnings.

An example of these types of boxes are shown in the sidebar.

Information

Warning

NOTE: All disassembly procedures assume that the system is turned **OFF**, and disconnected from any power supply (the battery is removed too).

Maintenance Tools

The following tools are recommended when working on the notebook PC:

- M3 Philips-head screwdriver
- M2.5 Philips-head screwdriver (magnetized)
- M2 Philips-head screwdriver
- Small flat-head screwdriver
- Pair of needle-nose pliers
- Anti-static wrist-strap

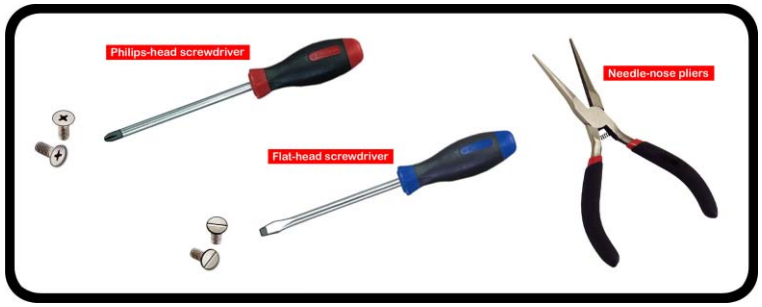

Connections

Connections within the computer are one of four types:

Locking collar sockets for ribbon connectors	To release these connectors, use a small flat-head screwdriver to gently pry the locking collar away from its base. When replacing the connection, make sure the connector is oriented in the same way. The pin1 side is usually not indicated.
Pressure sockets for multi-wire connectors	To release this connector type, grasp it at its head and gently rock it from side to side as you pull it out. Do not pull on the wires themselves. When replacing the connection, do not try to force it. The socket only fits one way.
Pressure sockets for ribbon connectors	To release these connectors, use a small pair of needle-nose pliers to gently lift the connector away from its socket. When replacing the connection, make sure the connector is oriented in the same way. The pin1 side is usually not indicated.
Board-to-board or multi-pin sockets	To separate the boards, gently rock them from side to side as you pull them apart. If the connection is very tight, use a small flat-head screwdriver - use just enough force to start.

Maintenance Precautions

The following precautions are a reminder. To avoid personal injury or damage to the computer while performing a removal and/or replacement job, take the following precautions:

1. **Don't drop it**. Perform your repairs and/or upgrades on a stable surface. If the computer falls, the case and other components could be damaged.
2. **Don't overheat it**. Note the proximity of any heating elements. Keep the computer out of direct sunlight.
3. **Avoid interference**. Note the proximity of any high capacity transformers, electric motors, and other strong magnetic fields. These can hinder proper performance and damage components and/or data. You should also monitor the position of magnetized tools (i.e. screwdrivers).
4. **Keep it dry**. This is an electrical appliance. If water or any other liquid gets into it, the computer could be badly damaged.
5. **Be careful with power**. Avoid accidental shocks, discharges or explosions.
   •Before removing or servicing any part from the computer, turn the computer off and detach any power supplies.
   •When you want to unplug the power cord or any cable/wire, be sure to disconnect it by the plug head. Do not pull on the wire.
6. **Peripherals** – Turn off and detach any peripherals.
7. **Beware of static discharge**. ICs, such as the CPU and main support chips, are vulnerable to static electricity. Before handling any part in the computer, discharge any static electricity inside the computer. When handling a printed circuit board, do not use gloves or other materials which allow static electricity buildup. We suggest that you use an anti-static wrist strap instead.
8. **Beware of corrosion**. As you perform your job, avoid touching any connector leads. Even the cleanest hands produce oils which can attract corrosive elements.
9. **Keep your work environment clean**. Tobacco smoke, dust or other air-born particulate matter is often attracted to charged surfaces, reducing performance.
10. **Keep track of the components**. When removing or replacing any part, be careful not to leave small parts, such as screws, loose inside the computer.

Power Safety Warning

Before you undertake any upgrade procedures, make sure that you have turned off the power, and disconnected all peripherals and cables (including telephone lines and power cord). It is advisable to also remove your battery in order to prevent accidentally turning the machine on.

Cleaning

Do not apply cleaner directly to the computer, use a soft clean cloth.
Do not use volatile (petroleum distillates) or abrasive cleaners on any part of the computer.
(For Computer Models Supplied with Light Blue Cleaning Cloth) Some computer models in this series come supplied with a light blue cleaning cloth. To clean the computer case with this cloth follow the instructions below.

- Power off the computer and peripherals.
- Disconnect the AC/DC adapter from the computer.
- Use a little water to dampen the cloth slightly.
- Clean the computer case with the cloth.
- Dry the computer with a dry cloth, or allow it time to dry before turning on.
- Reconnect the AC/DC adapter and turn the computer on.

Disassembly Steps

The following table lists the disassembly steps, and on which page to find the related information. **PLEASE PERFORM THE DISASSEMBLY STEPS IN THE ORDER INDICATED.**

To remove the Keyboard:

1. Remove the keyboard *page 2 - 5*

To remove the Battery:

1. Remove the keyboard *page 2 - 5*
2. Remove the battery *page 2 - 6*

To remove the HDD:

1. Remove the keyboard *page 2 - 5*
2. Remove the battery *page 2 - 6*
3. Remove the HDD *page 2 - 8*

To remove the System Memory:

1. Remove the keyboard *page 2 - 5*
2. Remove the battery *page 2 - 6*
3. Remove the system memory *page 2 - 10*

To remove and install the M.2 SSD:

1. Remove the keyboard *page 2 - 5*
2. Remove the battery *page 2 - 6*
3. Remove the M.2 SSD-1 (Intel) *page 2 - 11*
4. Remove the M.2 SSD-1 *page 2 - 12*
5. Remove the M.2 SSD-2 *page 2 - 13*

To remove the Wireless LAN Module:

1. Remove the keyboard *page 2 - 5*
2. Remove the battery *page 2 - 6*
3. Remove the WLAN *page 2 - 14*

To remove the CCD Module:

1. Remove the keyboard *page 2 - 5*
2. Remove the battery *page 2 - 6*
3. Remove the CCD module *page 2 - 16*

To remove the LCD Module:

1. Remove the keyboard *page 2 - 5*
2. Remove the battery *page 2 - 6*
3. Remove the HDD *page 2 - 8*
4. Remove the system memory *page 2 - 10*
5. Remove the M.2 SSD *page 2 - 11*
6. Remove the WLAN *page 2 - 14*
7. Remove the LCD module *page 2 - 18*

Removing the Keyboard

1. Turn **off** the computer, turn it over.
2. Remove screws 1 - 2 from the bottom of the computer.
3. Open it up with the LCD on a flat surface before pressing at point 3 to release the keyboard module (use the special eject stick 4 to do this) while releasing the keyboard in the direction of the arrow 5 as shown (***Figure 1a***).
4. Carefully lift the keyboard 6 up, being careful not to bend the keyboard ribbon cable 7. Disconnect the keyboard ribbon cable 7 from the locking collar socket by using a flat-head screwdriver to pry the locking collar pins 8 away from the base (***Figure 1b***).
5. Carefully lift the keyboard 6 off the computer (***Figure 1c***).

a.

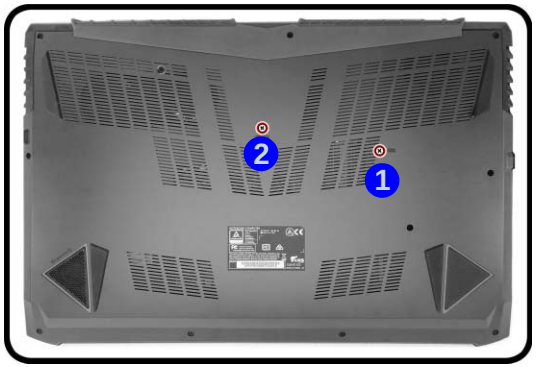

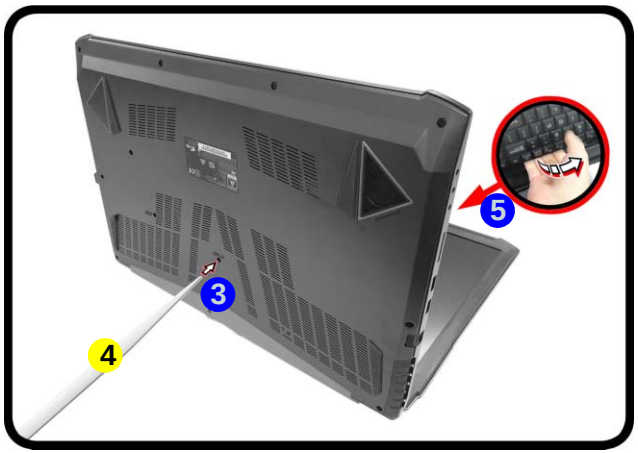

b.

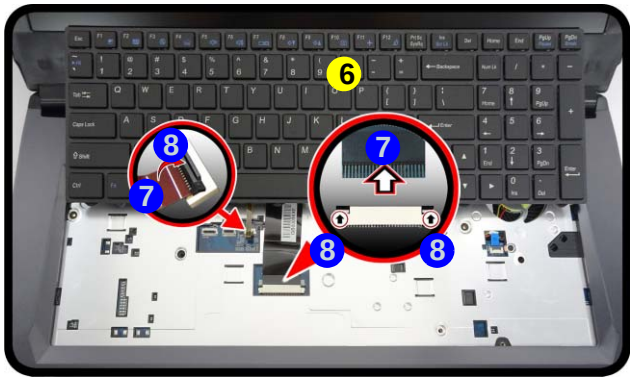

c.

Figure 1
Keyboard Removal

a. Remove the screws from the bottom of the computer and then eject the keyboard using a special eject stick to push the keyboard out while releasing the keyboard as shown.
b. Lift the keyboard up and disconnect the keyboard ribbon cable from the locking collar socket.
c. Remove the keyboard.

Re-inserting the Keyboard

When re-inserting the keyboard firstly, align the keyboard tabs at the bottom of the keyboard with the slots in the case.

4. Eject Stick
6. Keyboard

- 2 Screws

Figure 2
Battery Removal

a. Remove the screws.
b. Remove the SD cover and screws.
c. Remove the bottom case.

Removing the Battery

1. Turn the computer **off**, and remove the keyboard (***page 2 - 5***).
2. Remove screw 1 (***Figure 2a***).
3. Remove the SD card cover 2 and screws 3 - 13 (***Figure 2b***).
4. Release the bottom case 14 by using the left thumb 15 to hold down the most prominent area of the back cover and then use the right hand 16 to lift the rear side vent's most prominent area (***Figure 2c***).
5. Carefully remove the bottom case up in the direction of the arrow 17.

a.

b.

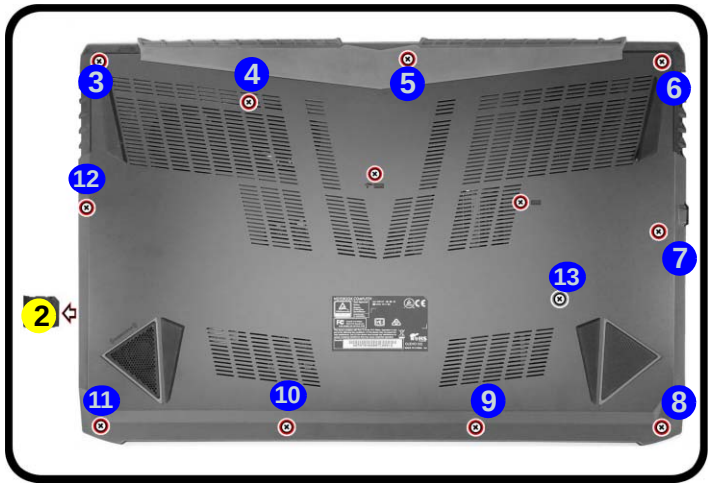

c.

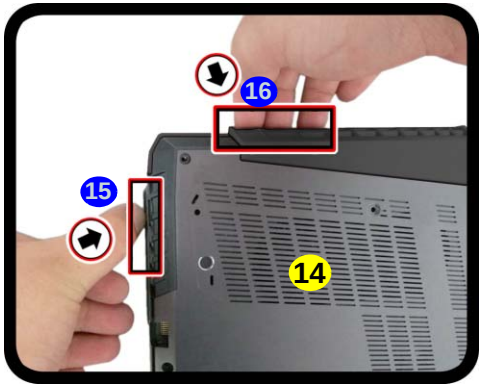

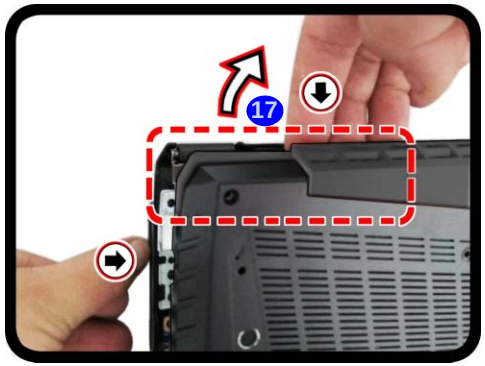

2. SD Card Cover
14. Bottom Case

- 12 Screws

6. The battery will be visible at point 18 on the computer (*Figure 3d*).
7. Carefully disconnect the cable 19, then remove screws 20 - 23 (*Figure 3e*).
8. Lift the battery 24 off the computer (*Figure 3f*).
9. Reverse the process to install a new battery (do not forget to replace all the screws and bottom cover).

Figure 3
Battery Removal (cont'd.)

d. Locate the battery.
e. Disconnect the cable and remove the screws.
f. Lift the battery off the computer.

d.

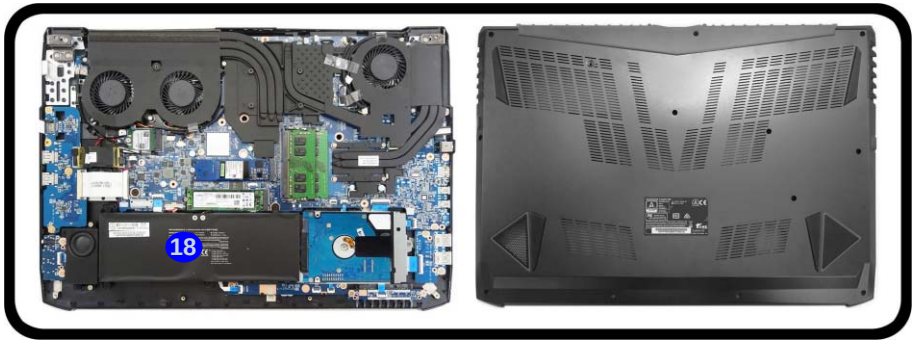

e.

f.

24. Battery

- 4 Screws

Figure 4
HDD Assembly Removal

a. Locate the HDD.
b. Remove the screws.

Removing the Hard Disk Drive

The hard disk drive can be taken out to accommodate other 2.5" serial (SATA) hard disk drives with a height of 7mm (h). Follow your operating system's installation instructions, and install all necessary drivers and utilities (as outlined in **Chapter 4 of the User's Manual**) when setting up a new hard disk.

Hard Disk Disassembly Process

1. Turn **off** the computer, and remove the keyboard (***page 2 - 5***) and battery (***page 2 - 6***).
2. The HDD will be visible at point 1 on the mainboard (***Figure 4a***).
3. Remove the screw 2 from the HDD assembly (***Figure 4b***).

a.

b.

6. Hard Disk

- 1 Screw

HDD System Warning

New HDD's are blank. Before you begin make sure:

You have backed up any data you want to keep from your old HDD.

You have all the CD-ROMs and FDDs required to install your operating system and programs.

If you have access to the internet, download the latest application and hardware driver updates for the operating system you plan to install. Copy these to a removable medium.

4. Slightly slide and pull the hard disk out.
5. Lift the hard disk assembly 3 out of the bay 4 (*Figure 5c*).
6. Remove screws 5 - 6 and bracket 7 from the hard disk 8 (*Figure 5d*).
7. Reverse the process to install a new hard disk (do not forget to replace the screws).

Figure 5
HDD Assembly Removal (cont'd.)

c. Slide and pull the HDD assembly out of the bay.
d. Remove the screws and bracket from the HDD.

c.

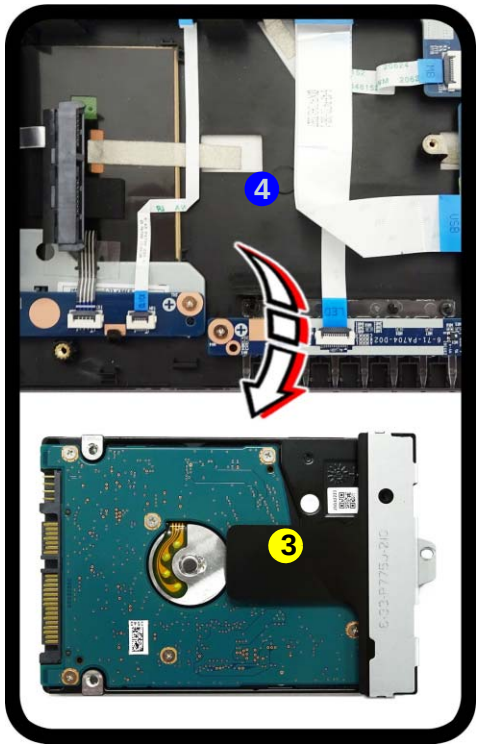

d.

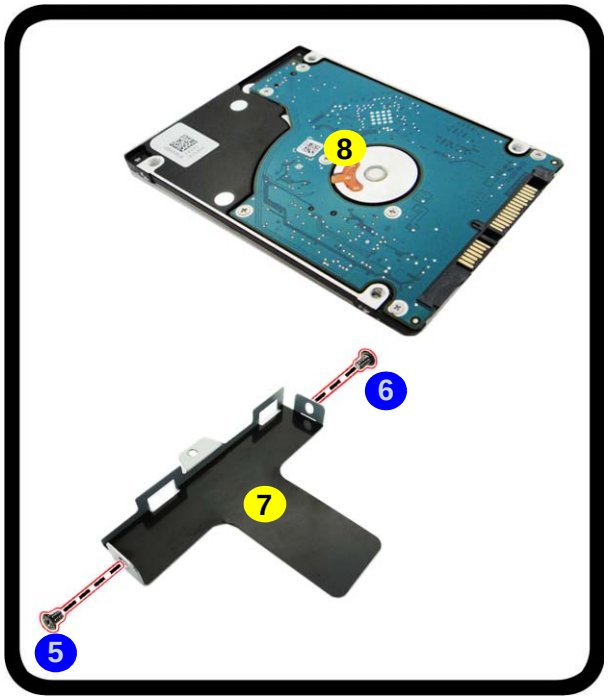

3. HDD Assembly
7. HDD Bracket
8. HDD

- 2 Screws

Figure 6
RAM Module Removal

a. The RAM modules will be visible at point 1 on the mainboard.
b. Pull the release latches.
c. Remove the module.

Contact Warning

Be careful not to touch the metal pins on the module's connecting edge. Even the cleanest hands have oils which can attract particles, and degrade the module's performance.

4. RAM Module

Removing the System Memory (RAM)

The computer has four memory sockets for 260 pin Small Outline Dual In-line Memory Modules (SO-DIMM) supporting DDR4 Up to 2400 MHz. The main memory can be expanded up to 64GB. The total memory size is automatically detected by the POST routine once you turn on your computer.

Memory Upgrade Process

1. Turn **off** the computer, turn it over, remove the keyboard (***page 2 - 5***) and battery (***page 2 - 6***).
2. The RAM-2 modules will be visible at point 1 on the mainboard (***Figure 6a***).
3. Gently pull the two release latches (2 & 3) on the sides of the memory socket in the direction indicated by the arrows (***Figure 6b***). The RAM module 4 will pop-up (***Figure 6c***), and you can then remove it.
4. Pull the latches to release the second module if necessary.
5. Insert a new module holding it at about a 30° angle and fit the connectors firmly into the memory slot.
6. The module will only fit one way as defined by its pin alignment. Make sure the module is seated as far into the slot as it will go. DO NOT FORCE IT; it should fit without much pressure.
7. Press the module in and down towards the mainboard until the slot levers click into place to secure the module.
8. Replace the bottom cover and the screws (see ***page 2 - 6***).
9. Restart the computer to allow the BIOS to register the new memory configuration as it starts up.

a.

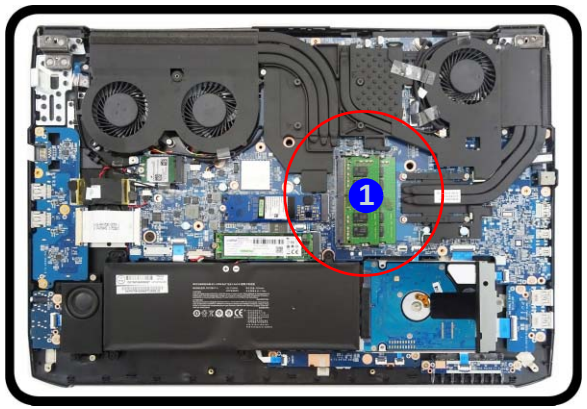

b.

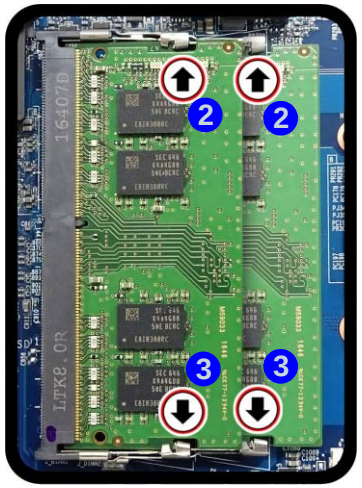

c.

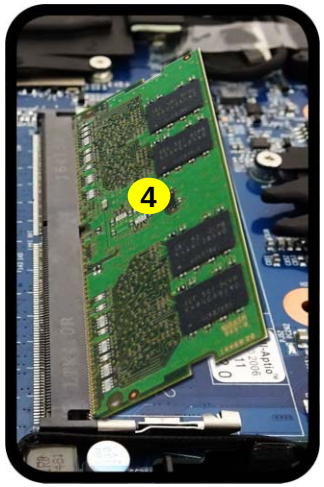

Removing the M.2 SSD Module

M.2 SSD-1 (Intel Optane) Removal Procedure

1. Turn **off** the computer, turn it over, remove the keyboard (***page 2 - 5***) and battery (***page 2 - 6***).
2. The M.2 SSD module will be visible at point 1 on the mainboard (***Figure 7a***).
3. Remove the screw 2 (***Figure 7b***).
4. The M.2 SSD module 3 (***Figure 7c***) will pop-up, and you can remove it from the computer.
5. Reverse the process to install a new module (do not forget to replace the screws and thermal pad).

Figure 7
M.2 SSD-1 Module Removal

a. Locate the M.2 SSD.
b. Remove the screw.
c. The M.2 SSD module will pop up.

a.

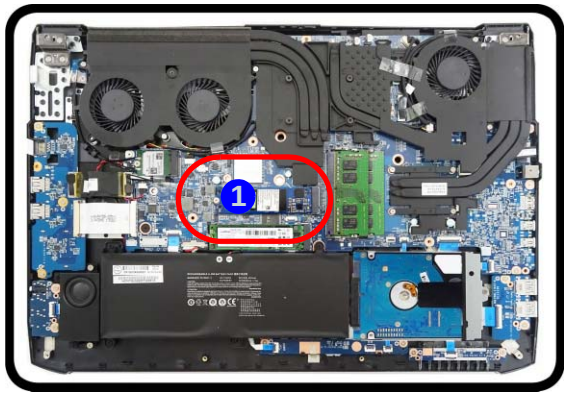

b.

c.

3.M2 SSD Module

- 1 Screw

Figure 8
M.2 SSD-1 Module Removal

a. Locate the M.2 SSD.
b. Remove the screw.
c. The M.2 SSD module will pop up.

M.2 SSD-1 Removal Procedure

1. Turn **off** the computer, turn it over, remove the keyboard (***page 2 - 5***) and battery (***page 2 - 6***).
2. The M.2 SSD module will be visible at point 1 on the mainboard (***Figure 7a***).
3. Remove the screw 2 (***Figure 7b***).
4. The M.2 SSD module 3 (***Figure 7c***) will pop-up, and you can remove it from the computer.
5. Reverse the process to install a new module (do not forget to replace the screws and thermal pad).

a.

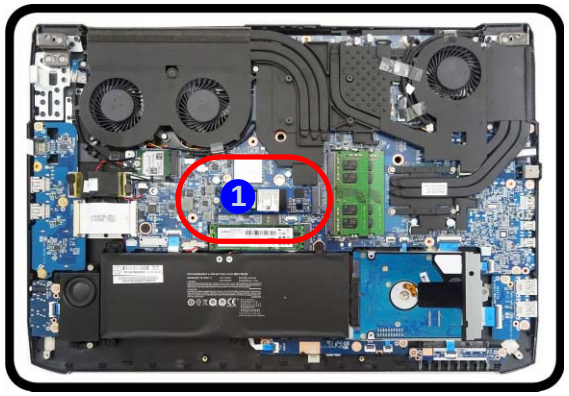

b.

c.

3.M2 SSD Module

- 1 Screw

M.2 SSD-2 Removal Procedure

1. Turn **off** the computer, turn it over, remove the keyboard (***page 2 - 5***) and battery (***page 2 - 6***).
2. The M.2 SSD module will be visible at point 1 on the mainboard (***Figure 7a***).
3. Remove the screw 2 (***Figure 7b***).
4. The M.2 SSD module 3 (***Figure 7c***) will pop-up, and you can remove it from the computer.
5. Reverse the process to install a new module (do not forget to replace the screws and thermal pad).

a.

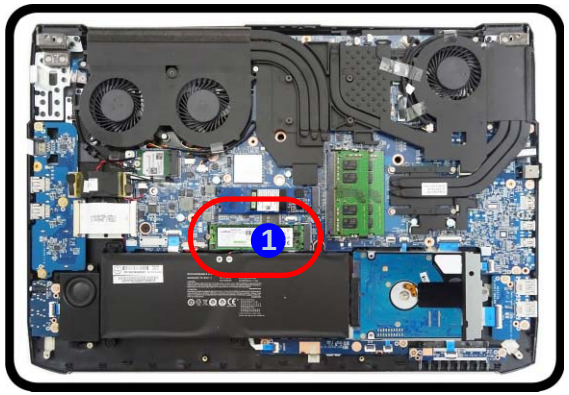

b.

c.

Figure 9
M.2 SSD-2 Module Removal

a. Locate the M.2 SSD.
b. Remove the screw.
c. The M.2 SSD module will pop up.

3.M2 SSD Module

- 1 Screw

Figure 10
Wireless LAN Module Removal

a. Locate the WLAN.
b. Disconnect the cables and remove the screw.
c. The WLAN module will pop up.

Note: Make sure you reconnect the antenna cable to the "1 + 2" socket (***Figure 10b***).

5.Wireless LAN Module

- 1 Screw

Removing the Wireless LAN Module

1. Turn **off** the computer, turn it over, remove the keyboard (***page 2 - 5***) and battery (***page 2 - 6***).
2. The Wireless LAN module will be visible at point 1 on the mainboard (***Figure 10a***).
3. Carefully disconnect the cables 2 & 3, and then remove the screw 4 (***Figure 10b***)
4. The Wireless LAN module 5 (***Figure 10c***) will pop-up, and you can remove it from the computer.

a.

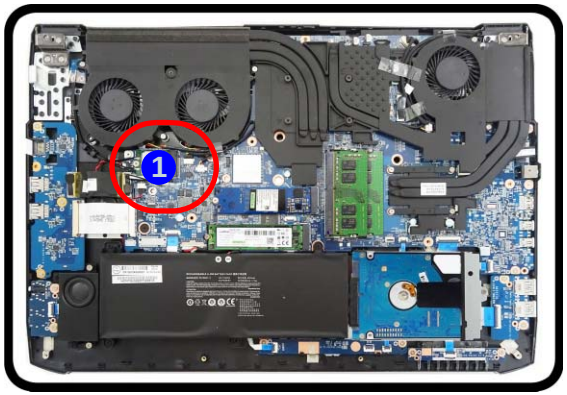

b.

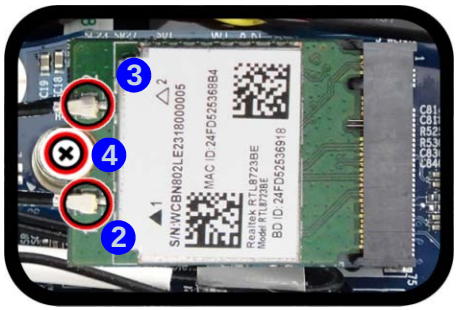

c.

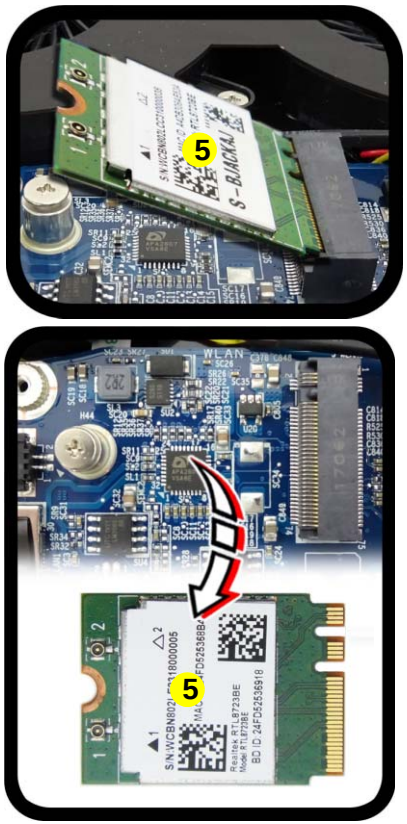

Wireless LAN, Combo Module Cables

Note that the cables for connecting to the antennae on WLAN, WLAN & Bluetooth Combo, and LTE modules are not labelled. The cables/covers (each cable will have either a black or transparent cable cover) are color coded for identification as outlined in the table below.

Module Type	Antenna Type	Cable Color	Cable Cover Type
WLAN/WLAN & Bluetooth Combo	WM 1	Black	Transparent
	WM 2	Black	White

Cable 1 is usually connected to antenna 1 (Main) on the module, and cable 2 to antenna 2 (Aux).

Figure 11
CCD Removal

a. Remove rubber and screws and then carefully release the inner frame of the LCD panel at the points indicated by the arrows.
b. Remove the LCD front cover.

Removing the CCD

1. Turn **off** the computer, turn it over to remove the keyboard (***page 2 - 5***) and battery (***page 2 - 6***).
2. Lay the computer down on a flat surface with the top case up forming a 120 degree angle. Carefully remove the mylar covers 1 - 2 and screws 3 - 4.
3. Run your fingers around the inner frame of the LCD panel to lift it up at points 5 - 6 as indicated by the arrows, run your fingers again around the inner frame at point 7 to lift from one corner to the other as indicated by the arrows, and then lift up the outer frame at point 8 as indicated by the arrows (***Figure 11e***).
4. Remove the LCD front cover 5 (***Figure 11b***).

a.

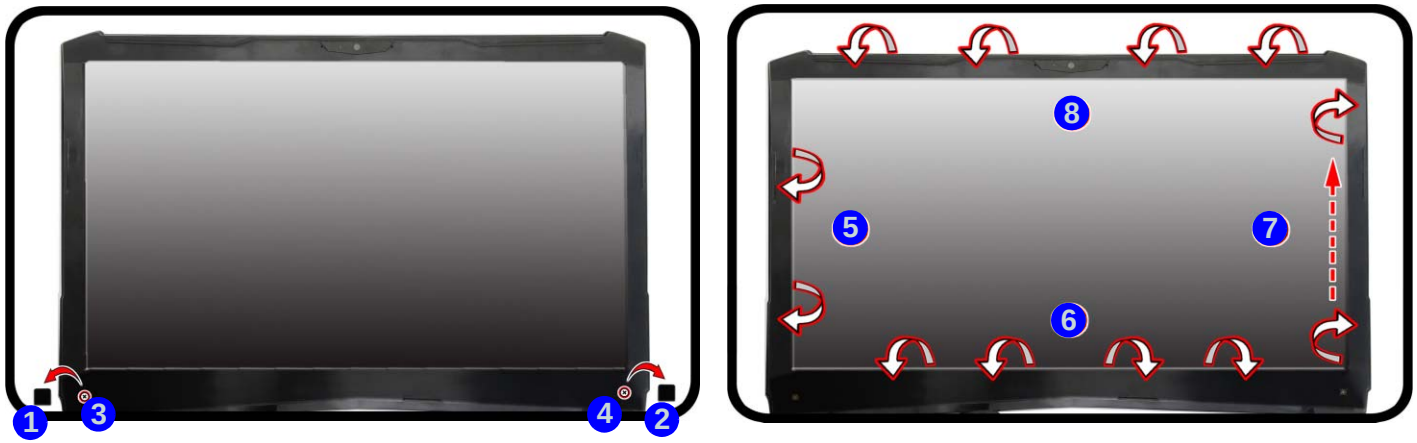

b.

9. LCD Front Cover

- 2 Screws

5. Disconnect the cable 10 (*Figure 12c*).
6. Remove the CCD module 11 (*Figure 12d*).
7. Reverse the process to install a new CCD module.

c.

d.

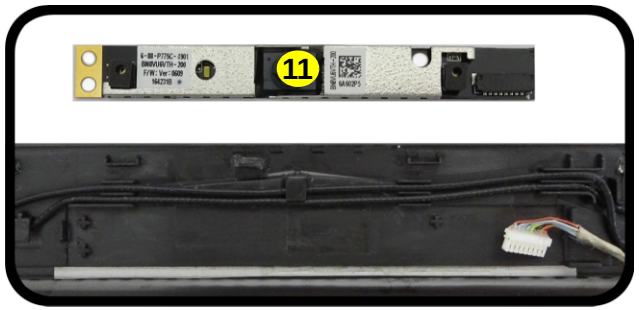

Figure 12
CCD Removal (cont'd)

c. Disconnect the cable.
d. Remove the CCD module.

11. CCD Module

Figure 13
Top Case Removal

a. Remove screws and heatsink then carefully release the inner frame of the LCD panel at the points indicated by the arrows.
b. Remove the LCD front cover.

Removing the LCD Module

1. Turn **off** the computer, turn it over to remove the keyboard (***page 2 - 5***), battery (***page 2 - 6***), HDD (***page 2 - 8***), RAM (***page 2 - 10***), SSD module (***page 2 - 11***) and WLAN (***page 2 - 14***).
2. Lay the panel down on a flat surface (protection pad) with the top case open forming a 120 degree angle. Carefully disconnect the cables 1 - 4 and remove the screws 5 - 18 (***Figure 13a***).
3. Lift and remove the heatsink 19 from the mainboard (***Figure 13b***).

a.

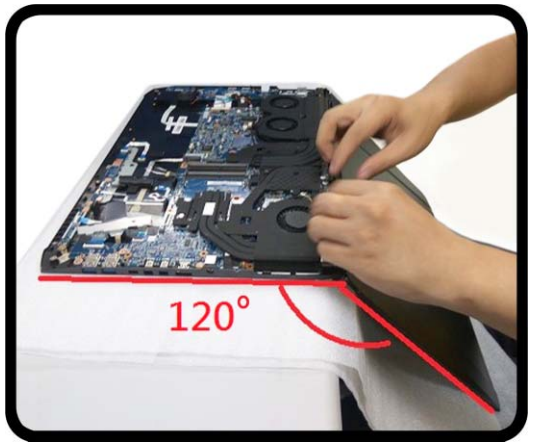

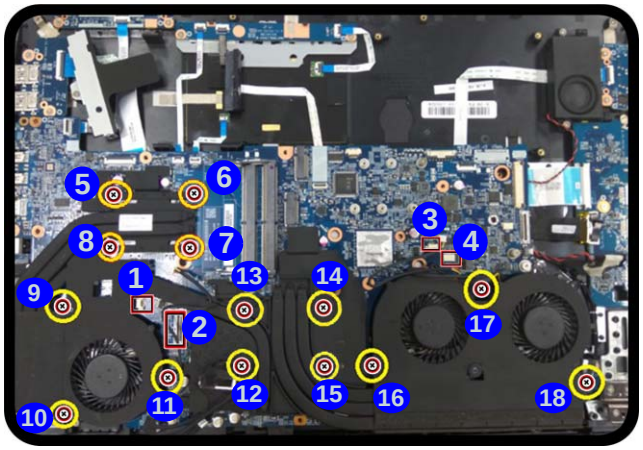

b.

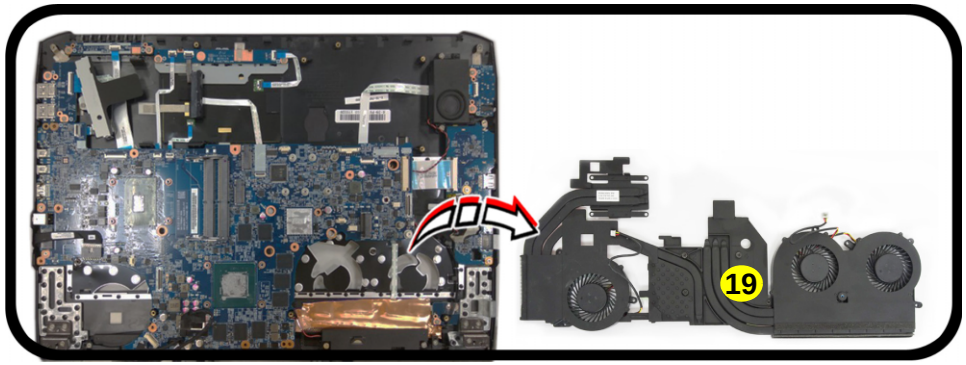

19. Heat sink

- 14 Screws

4. Remove the screws 20 - 21 from the hinge cover and the screws 22 - 27 from the hinge (*Figure 14c*).
5. Remove the LCD module 28 while it is open, still forming a 120 degree angle (*Figure 14d*).
6. Reverse the process to install a new LCD module.

Figure 14
Top Case Removal (cont'd)

c. Remove the screws.
d. Remove the LCD module.

c.

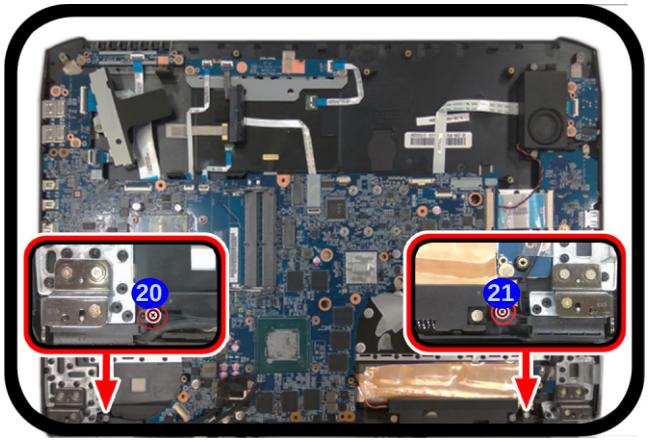

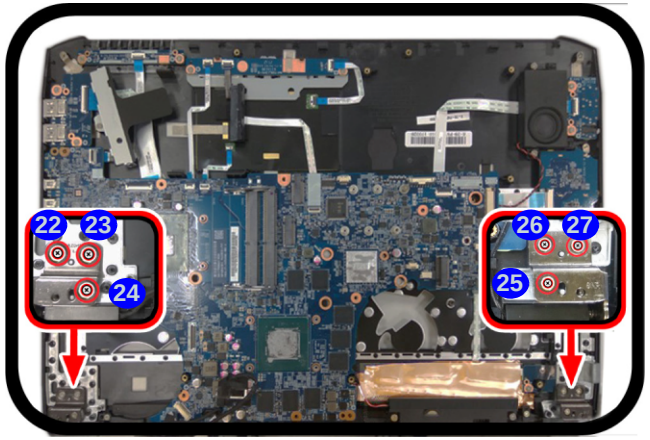

d.

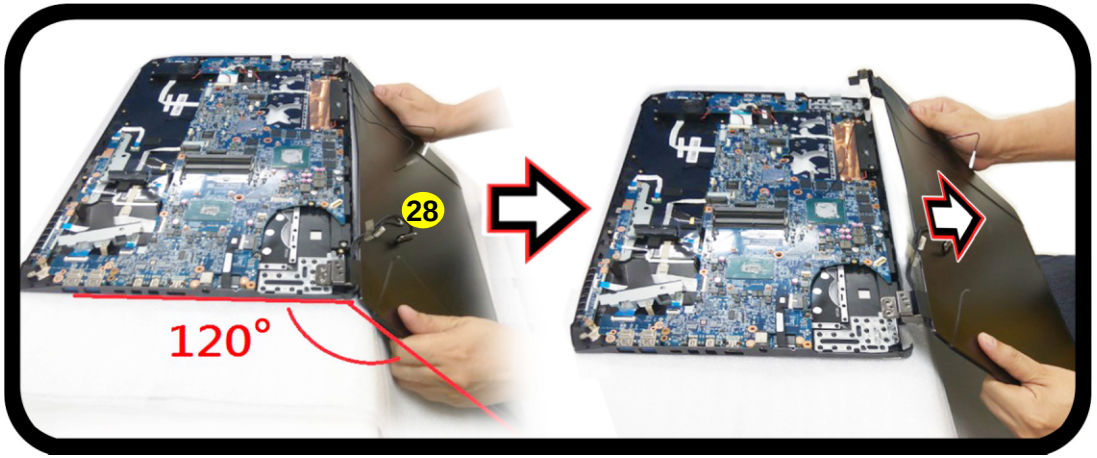

28. LCD Module

- 8 Screws

Figure 15
LCD Module Removal

e. Remove rubber and screws and then carefully release the inner frame of the LCD panel at the points indicated by the arrows.
f. Remove the LCD front cover.

7. Lay the LCD module down on a flat surface. Carefully remove the mylar covers 29 - 30 and screws 31 - 32.
8. Run your fingers around the inner frame of the LCD panel to lift it up at points 33 - 34 as indicated by the arrows, run your fingers again around the inner frame at point 35 to lift from one corner to the other as indicated by the arrows and then lift up the outer frame at point 36 as indicated by the arrows (***Figure 15e***).
9. Remove the LCD front cover 37 (***Figure 15f***).

e.

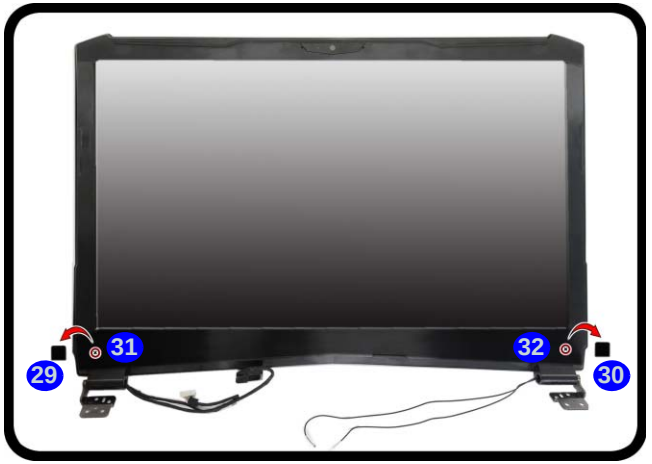

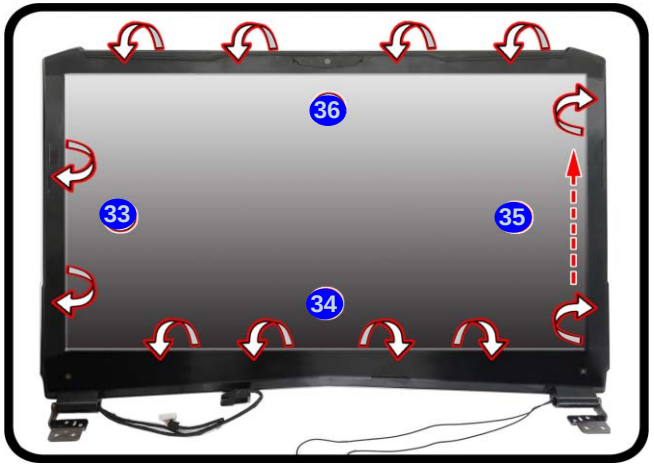

f.

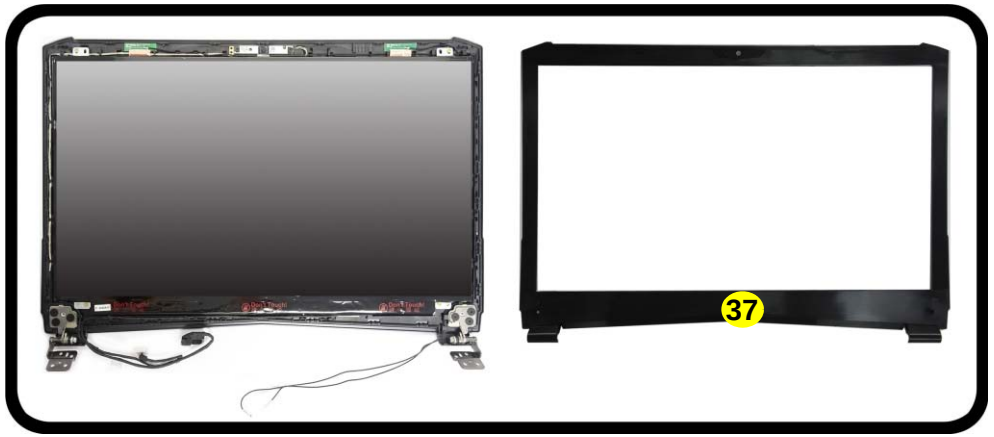

37. LCD Front Cover

- 2 Screws

10. Remove the screws 38 - 41 (*Figure 12c*).
11. Remove the LCD panel 42 (*Figure 16b*).
12. Reverse the process to install a new LCD panel.

Figure 16
LCD Module Removal (cont'd)

g. Remove the screws.
h. Remove the LCD panel.

g.

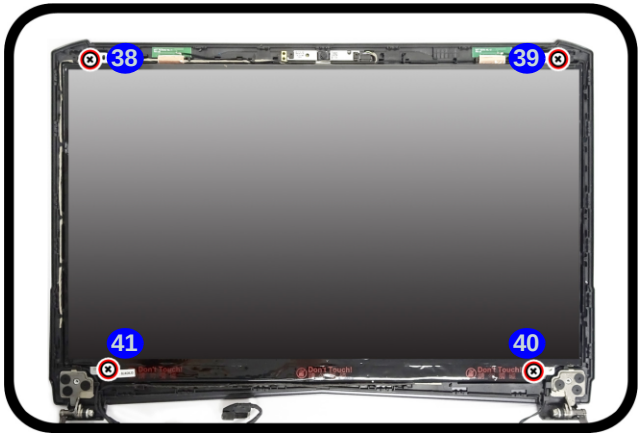

h.

42. LCD Panel

- 4 Screws

Appendix A:Part Lists

This appendix breaks down the ***PA70EP6(-G) / PA71EP6(-G)*** series notebook's construction into a series of illustrations. The component part numbers are indicated in the tables opposite the drawings.

Note: This section indicates the *manufacturer's* part numbers. Your organization may use a different system, so be sure to cross-check any relevant documentation.

Note: Some assemblies may have parts in common (especially screws). However, the part lists DO NOT indicate the total number of duplicated parts used.

Note: Be sure to check any update notices. The parts shown in these illustrations are appropriate for the system at the time of publication. Over the product life, some parts may be improved or re-configured, resulting in *new* part numbers.

Part List Illustration Location

The following table indicates where to find the appropriate part list illustration.

Table A - 1
Part List Illustration Location

Part	
Top	*page A - 3*
Bottom	*page A - 4*
Main Board	*page A - 5*
HDD	*page A - 6*
LCD	*page A - 7*

Top

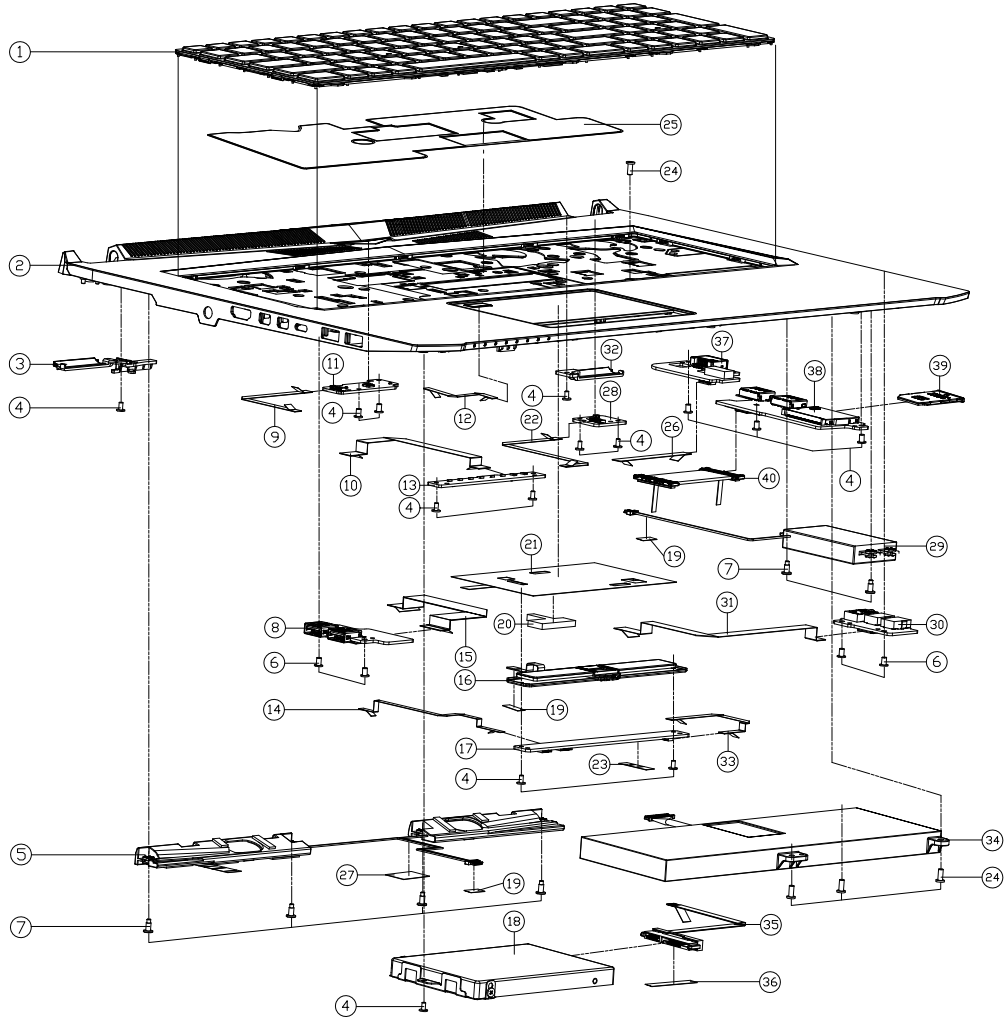

ITEM	PART NAME	PART NO	REMARK
1	BLT 8.0 OD OD CNTS CELLULAR WORK 3.0CC 600G 3.0W 1.0GL PHENOL ISOLATION 600 600D ET = 1.0 FORE ROOF BRANCH	6-80-N8500-011-1	
1	LED 4.0 ET 0.0 OD 0.0 CONTACTOR WORK 3.0CC 600G 3.0W 1.0GL PHENOL ISOLATION 600 600D ET = 0.0 FORE	6-80-PA7E0-012-1	
1	WATE BL 0.0 0.0 0.0 CNTRSEPERACATOR NOTEBOOK BLACK ISOLATION WITH WINDOW NEXT = 0.0 FORE	6-80-N7500-012-1	
2	(PRE-PROCESS) TOP CASE MODULE (W/O FPKTOUCHPAD) PA70ES	6-78-PA70ES02-010	
2	(PRE-PROCESS) TOP CASE MODULE (W/FPSECUREPAD) PA70ES	6-78-PA70ES02-020	
2	(PRE-PROCESS) TOP CASE MODULE (W/O FPKTOUCHPAD) PA71ES	6-78-PA71ES02-010	
2	(PRE-PROCESS) TOP CASE MODULE (W/FPSECUREPAD) PA71ES	6-78-PA71ES02-020	
3	HINGE COVER-L(PC+ABS) PA70HS	6-42-PA702-022	
3	HINGE COVER-L(PC+ABS) PA71HS	6-42-PA712-021	
4	.SCREW M2*4L KI NI ICT NY (OD=Ø4.5,DT=0.4)	6-35-B1120-4RE	
5	SPK+CABLE R&L R 97.5MM/L 115.55MM 2W 4? PA70HS	6-23-5PA70-0S4	
6	.SCREW M2.5*4L KI NI ICT NY	6-35-21125-4R0	
7	SCREW M2*6.2L NI ICT NY FOR SPEAKER	6-35-Z1120-6R2	
8	USB3.0 BOARD (W/RE-DRIVER) V2.0 PA70ES	6-77-PA7E5-D02	
8	USB3.0 BOARD V2.0 PA70ES	6-77-PA7E3-D02	
9	FFC CABLE POWER TO MB (P=1.0) 4 PIN 20V (L=92 MM) BLACK (QCOPA70ES	6-43-PA7E0-051	
10	FFC CABLE LED TO MB (P=0.5) 16 PIN 3.3V 117MM PA70ES	6-43-PA7E0-021-1	
11	POWER SWITCH BOARD V2.0 PA70ES	6-77-PA7ES-D02	
12	FFC CABLE TP(FP) TO MB (P=0.5) 6 PIN (L=57 MM) PA70HS	6-43-PA700-052	ONLY FOR W/FINGER
13	LED BOARD V2.0 PA70ES	6-77-PA7E4-D02	
14	FFC CABLE CLICK TO MB (P=0.5) 6 PIN (L=113 MM) PA70HS	6-43-PA700-022	
15	FFC CABLE USB TO MB (P=0.5) 30 PIN (L=126.7 MM)(QCOPA70ES	6-43-PA7E0-041-1	
16	FUNCTION KEY FOR CLICK BUTTON MODULE W/O FINGER PA70HS (KAPEO)	6-23-KPA70-011	ONLY FOR PA70ES/EP6
16	FUNCTION KEY FOR CLICK BUTTON MODULE W/O FINGER ADD PAINT PA3086S	6-23-KP65R-023	ONLY FOR PA71ES/EP6
17	CLICK BOARD V2.0 PA70ES	6-77-PA7E2-D02	
18	W/O HDD ASS'Y PA70HS	6-79-PA70HS0J-010	
18	W/HDD ASS'Y PA70HS	6-79-PA70HS0J-020	
19	TAPE MYLAR TRANSPARENT (20*10*0.05) P180HM	6-40-P1803-020	
20	SPONGE(25*25) FOR 7 MM HDD PA70HS	6-47-0019A-25F	ONLY FOR 7MM HDD
21	MYLAR FOR TOUCHPAD(L108*W61) PA70HS	6-40-PA702-012	
22	FFC CABLE HALL SENSOR TO MB (P=1.0) 4 PIN (L=115 MM) PA70HS	6-43-PA700-062	
23	CONDUCTIVE CLOTH -B PA70HS	6-47-PA702-050	
24	.SCREW M2.5*6L K BZ ICT NY	6-35-82125-6RA	
25	BACKLIGHT KB THERMAL(222*94*0 CU FOIL+TESA4972 PA70HS	6-47-PA700-060	
26	FFC CABLE LAN TO MB (P=0.5)10 PIN 5V 66MM(QCO PA70ES	6-43-PA7E0-031-1	
27	802.11AD TAPE MYLAR(BLACK)(20*15*0.127)P655RP6	6-40-P655S-P10	
28	LID BOARD V3.0 PA70ES	6-77-PA7E6-D03	
29	SPK+CABLE SUBWOOFER 55*32 117MM 4.0W 4? PA70HS	6-23-5PA70-0W1	
30	AUDIO BOARD V2.0 PA70ES	6-77-PA7E8-D02	
31	FFC CABLE AUDIO TO MB (P=0.5) 16 PIN (L=177MM) PA70HS	6-43-PA700-042	
32	HINGE COVER-R(PC+ABS) PA70HS	6-42-PA702-012	
32	HINGE COVER-R(PC+ABS) PA71HS	6-42-PA712-011	
33	FFC CABLE TP TO CLICK (P=0.5) 8 PIN (L=83 MM) PA70HS	6-43-PA700-092	
34	BAT 5.1U 5S4A4400A4A4 4CP 3P4/4S2P (POLYMER) 90A(4A2P) (QCO(5S) K TESA COVER PA70ES	6-87-PA70S-61B01	
34	BAT 5.1U 5S4A4400A4A4 4CP 4S1A(2P4S1P) (POLYMER) 5S2A(4A2P) (QCO(5S) W/O TESA PA70ES	6-87-PA70S-62B01	
35	HDD CON+CD+4V/CABLE+WIRE CODE (FFC CABLE 122.4MM) (CEN) PA70HS	6-23-FPA70-011	
36	TAPE MYLAR (A),MYLAR M550J	6-40-M55J2-010	
37	LAN BOARD V2.0 PA70ES	6-77-PA7EZ-D02	
38	CARD READER(W/REDRIVER) V3.0 PA70ES	6-77-PA7EX-D03	
39	DUMMY 3IN1 NON PUSH TYPE PC+ABS (C7230P-7010EX)(CHANGE) V3970GW	6-42-W9708-011	
40	WIRE CABLE CARD READER BOARD TO MB 50MM 5V 40PIN (TWISTED LINE) (QC) PA70ES	6-43-PA7E0-011	

Figure A - 1
Top

Bottom

Figure A - 2
Bottom

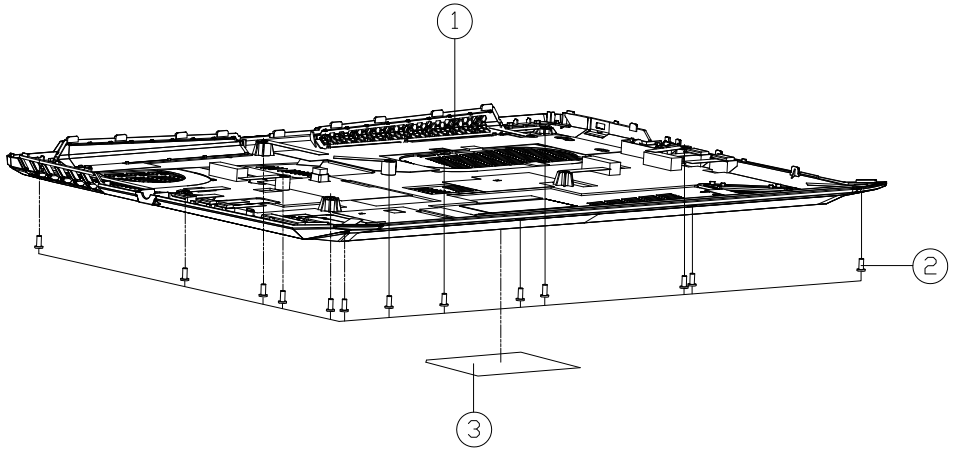

ITEM	PART NAME	PART NO	REMARK
1	BOTTOM CASE MODULE PA70ES	6-39-PA7E3-011	
1	BOTTOM CASE MODULE PA71ES	6-39-PA7E3-111	
2	SCREW M2.5*6L K BZ ICT NY	6-35-82125-6RA	
3	PRODUCT LABEL FOR PA70ES	6-45-PA70ES03-010	
3	PRODUCT LABEL FOR PA70EP6	6-45-PA70EP63-010	
3	PRODUCT LABEL FOR PA71ES	6-45-PA71ES03-010	
3	PRODUCT LABEL FOR PA71EP6	6-45-PA71EP63-010	
3	PRODUCT LABEL FOR PA71ES-G	6-45-PA71ESG3-010	
3	PRODUCT LABEL FOR PA71EP6-G	6-45-PA71EP6G-010	

Main Board

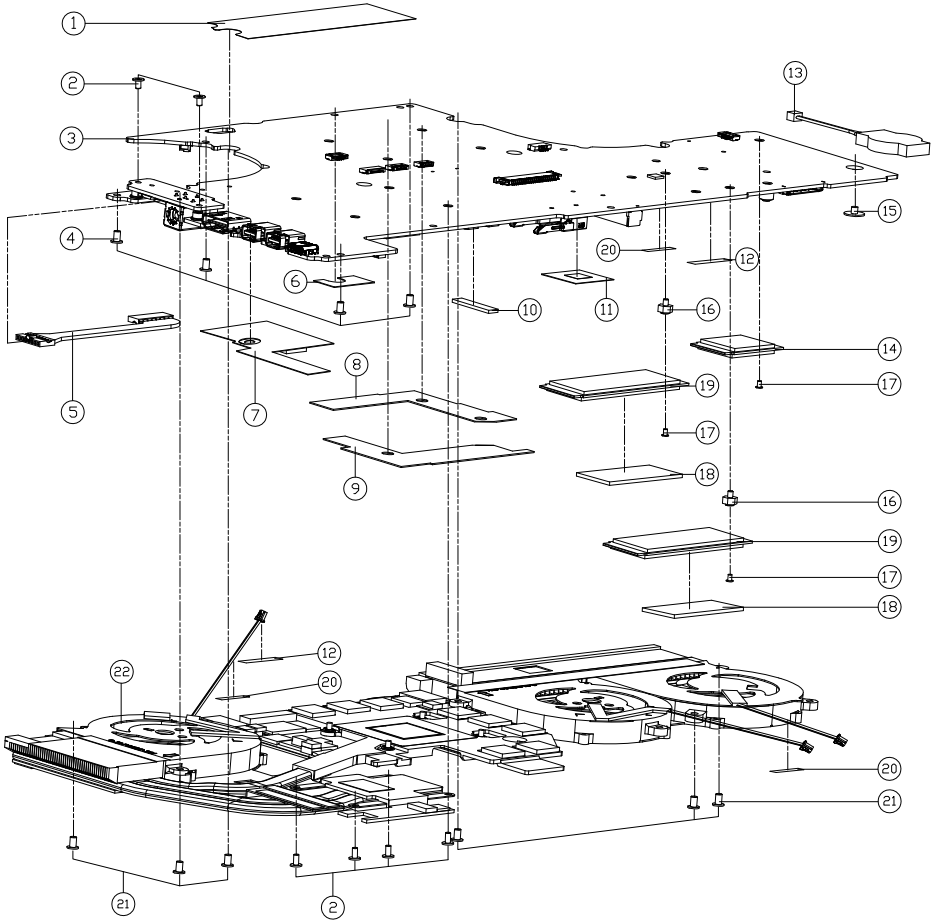

ITEM	PART NAME	PART NO	REMARK
1	MB MYLAR(L89*W27)PA70ES	6-40-PA7E2-021	
2	.SCREW M2*4L KI NI ICT NY (DD=Ø4.5,DT=0.4)	6-35-B1120-4RE	
3	MAIN BOARD(PU5-E8GW/2G) V2A (EXPALED PER KEY KDA4/TIT3,PPM-DC BOARD V3A PA70ES	6-77-PA70ES0A-N02A-9C	
3	MAIN BOARD(PU5-E8GW/2G) V2A(EXPALED PER KEY KDA4/TIT3,PPM-DC BOARD V3A PA70EP6	6-77-PA70EP6A-N02A-9C	
3	MAIN BOARD(PU7-B7GW/2G) V2A (EXPALED PER KEY KDA4/TIT3,PPM-DC BOARD V3A PA70EP6-G	6-77-PA70EP6G-N02A-B	
3	MAIN BOARD(PU5-E8GW/2G) V2A (EXPWALLT / SINGLE DL KDA4/TIT3A/D TPPM-DC BOARD V3A PA70EP6-G	6-77-PA70EP6G-N02A-7C	
3	MAIN BOARD(PU7-B7GW/2G) V2A (EXPWALLT / SINGLE DL KDA4/PPM4/D TIT3DC BOARD V3A PA70EP6-G	6-77-PA70EP6G-N02A-8B	
3	MAIN BOARD(PU9-B9GW/2G) V2A (EXPALED PER KEY KDA4/TIT3,PPM-DC BOARD V3A PA70ES-G	6-77-PA70ESGA-N02A-A	
3	MAIN BOARD(PU7-B7GW/2G) V2A (EXPALED PER KEY KDA4/TIT3,PPM-DC BOARD V3A PA70ES-G	6-77-PA70ESGA-N02A-B	
4	.SCREW M2.5*4L KI NI ICT NY	6-35-21125-4R0	
5	WIRE CABEL DC BOARD TO MB 8PIN (HL/ACES) PA70HS	6-43-PA700-0C1	
6	MB REAR MYLAR (PET)PA70HS	6-40-PA700-010	
7	MYLAR FOR MB BOTTOM(79.2*33) PA70ES	6-40-PA7E2-050	
8	MB_ABSORBER-2 60*60*0.45T PA70HS	6-47-PA700-021	
9	MB_ABSORBER-1 60*60*0.45T PA70HS	6-47-PA700-031	
10	MB DDR RUBBER (SLICON) PA70HS	6-47-PA700-040	
11	AL FOIL+THERMAL PAD 25X24MM PA70ES	6-40-PA7ES-010	
12	TAPE MYLAR (C),MYLAR M550J	6-40-M55J2-030	
13	BAT. 20MM 3V 220MAH W/CABLE 55MM BC2032H/5.5VMOLEX (SHIMANO)	6-23-22015-TE0	
14	WLAN+BT COMBO DUAL BAND INTEL THUNDER PEAK 2 9560NGW NON-VPRO 2X2 AC+BT U.FL M2 2230 PTSKIN	6-88-P75FF-4210	OPTION
14	WLAN+BT COMBO DUAL BAND INTEL JEFFERSON PEAK 1 9462NGW NON-VPRO DU DIVERSITY ANTENNA AC+BT U.FL CNVI M2 2230	6-88-N24GF-4200	OPTION
14	WLAN+BT COMBO DUAL BAND INTEL JEFFERSON PEAK 2 9560NGW NON-VPRO 2X2 AC+BT U.FL CNVI M2 2230	6-88-N24GF-4220	OPTION
14	WLAN+ BT COMBO DUAL BAND REVOLT KILLER E3000(INTEL 9560NGW,MV) 2X2 AC+BT U.FL M2 2230	6-88-P95EF-4200	OPTION
15	SCREW M2.5*2.5L KI BK/Z ICT NY(Ø8,T=0.6)	6-35-B6125-2R5	
16	SCREW M2*2.5L (H=2.5 D=5) STEEL ICT NY FOR NGFF CARD(CHANGE)	6-35-ZA120-2R5-1	
17	SCREW M2*2L KI NI ICT NY (DD=Ø5 ,T=0.5)	6-35-B1120-2R0	
18	THERMAL PAD FOR M2 SSD TFLEX83.5 30*18MM PA70ES	6-48-PA7E3-010	
19	SSD M2 2280 512GB SAMSUNG MZVLW512HMJP-00000 (PM981) PCIE G3X4 3D TLC FWCXV7J2Q	6-85-D515B-S05	OPTION
19	SSD M2 2280 1TB(512GB) SAMSUNG MZVKW1T0HMLH-00000 (SM963) PCIE G3X4 3D MLC FWCXV7J2Q	6-85-D511T-S00	OPTION
19	SSD M2 2280 512GB PHISON ESMFS128GTM22-E7 (E7) PCIE G3X4 MLC	6-85-D515B-H00	OPTION
19	SSD M2 2280 512GB INTEL SSDPEKKW512G7 (660P) PCIE G3X4 3D TLC FWP5F110C	6-85-D515B-Z00	OPTION
19	SSD M2 2280 512GB SAMSUNG MZVLB512HBJQ-00000 (PM991) PCIE G3X4 3D TLC 64 LAYERS	6-85-D515B-S08	OPTION
19	SSD M2 2280 256GB SAMSUNG MZNLN256HAJQ-00000 (PM871D) SATA3 3D TLC 64 LAYERS	6-85-D51R6-S08	OPTION
19	SSD M2 2280 1GB INTEL NUMPSEL0U0GAGES (OPTANE MEMORY STORAGE) REACH 2) PCIE G2X2 3D OPTANE	6-85-D5116-Z02	OPTION
19	SSD M2 2280 256GB SAMSUNG MZVLW256HEHP-00000 (PM961) PCIE G3X4 3D TLC FWCXV7J2Q	6-85-D51R6-S07	OPTION
20	TAPE MYLAR TRANSPARENT (20*10*0.05) P180HM	6-40-P1803-020	
21	SCREW M2*5L KI(T=0.8 D=4.0) BK/Z ICT NY	6-35-B6120-5R0	
22	CPU & VGA HEATSINK MODULE PA70ES	6-31-PA7E2-101	

Figure A - 3
Main Board

A.Part Lists

HDD

Figure A - 4
HDD

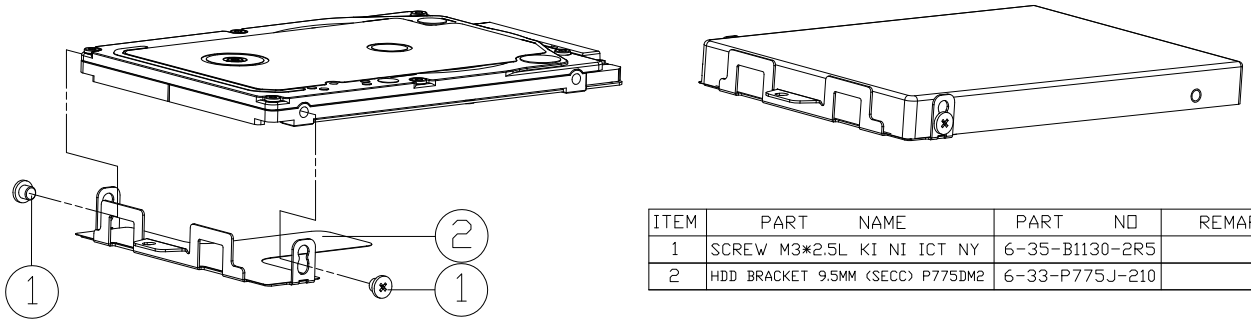

ITEM	PART NAME	PART NO	REMARK
1	SCREW M3*2.5L KI NI ICT NY	6-35-B1130-2R5	
2	HDD BRACKET 9.5MM (SECC) P775DM2	6-33-P775J-210	

LCD

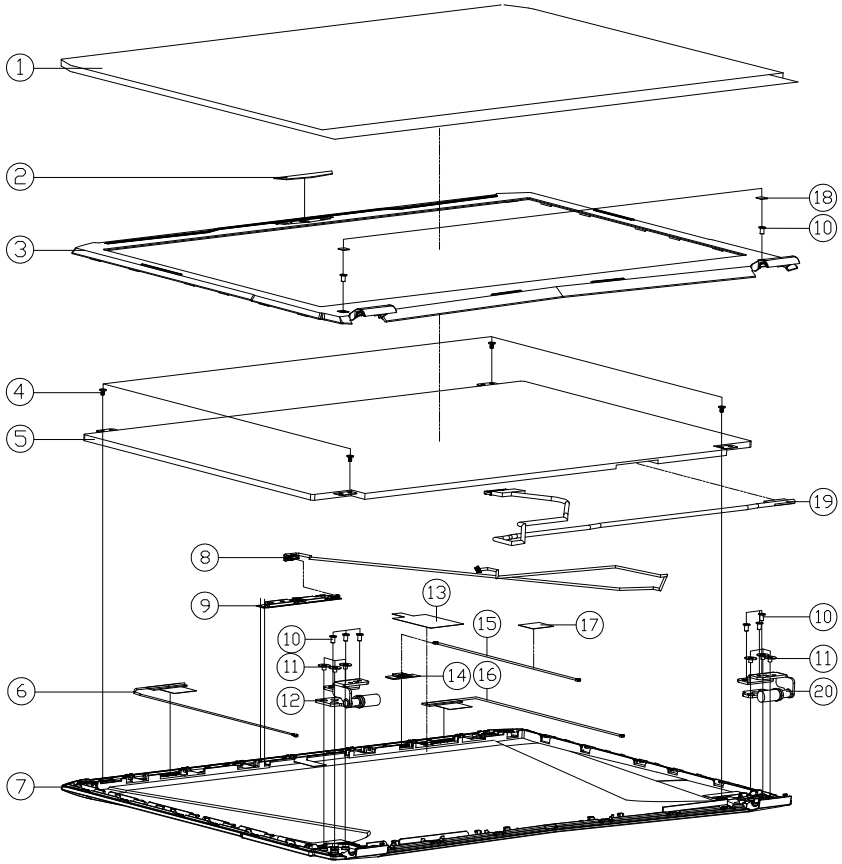

ITEM	PART NAME	PART NO	REMARK
1	BOPP MYLAR 278*440*T=0.05 FOR P670RS-GM	6-40-P67S1-010-M	
2	CCD LENS PC PA70HS	6-42-PA701-011-1	
3	FRONT COVER MODULE PA70HS	6-39-PA701-013	
4	.SCREW M2*4L KI NI ICT NY (DD=Ø4.5,DT=0.4)	6-35-B3120-3R0	
5	LCD 17.3" UHD / IPS (AHVA) / EDP AU B173ZAN01.0 2K SUPPORT S/W G-SYNC * LED 4.0MM	6-50-N1240-G00	
5	LCD 17.3" FHD/ AAS / N7/EDP INNOLUX N173HCE-E31 (LED) 4.0 MM	6-50-NB240-V00	
5	LCD 17.3" FHD/120HZ/N9/3MS/NON GT/EDP INNOLUX N173HHE-G32 (UV&C3) LED 4.0 MM	6-50-NBB40-V072	
5	LCD 17.3" QHD/120HZ/NVSR G-SYNC/N7/EDP AU B173QTN01.0 LED 4.0MM	6-50-N6240-G00	
5	LCD 17.3" FHD / IPS /5V G-SYNC/NON GT/ EDP LG LP173WF4-SPF5 (EDDG5) LED 4.0MM	6-50-NBB40-L081	
5	LCD 17.3" UHD /AHVA/5V G-SYNC/ADOBE 100/NON GT/ EDP AU B173ZANN01.0/A63A/2A/7A0 LED 4.0MM	6-50-N1B40-G100	
5	LCD 17.3" FHD/AHVA/144HZ/NVSR G-SYNC/N7/NON GT/EDP AU B173HAN01 LED 4.0MM	6-50-NBB40-G040	
6	ANTENNA 1PEX4 WLAN WGT WL1 PCB AR 2.4G/5G L=800MM PA70HS	6-23-7PA70-010	
7	LCD BACK COVER MODULE PA70HS	6-39-PA701-022	
7	LCD BACK COVER MODULE PA71HS	6-39-PA711-021	
8	WIRE CABLE FOR CCD D-MIC 650MM 3.3V 8P (HL) PA70HS	6-43-PA70T-010	
9	UVC CAMERA CHICONY FOX CXFG1020MC020UH 2M FHD DV2740 W650MC FV360A W/WHITE-LED W/2B-MIC	6-88-W65DC-5100	
9	UVC CAMERA RESIN FOX DV8V4V8VTH-200 2M FHD DV2740 P775CM FV4669 W/WHITE-LED W/2B-MIC	6-88-P775C-4901	
10	.SCREW M2.5*4L KI NI ICT NY	6-35-21125-4R0	
11	SCREW M2.5*2.5L KI BK/Z ICT NY(Ø8,T=0.6)	6-35-B6125-2R5	
12	HINGE L SK7 PA70HS	6-33-PA701-0L1	
13	802.11AD COPPER FOIL P775DM2	6-47-P7751-211	
14	802.11AD ANTENNA MODULE USI SPA802A-R (6GHz-60GHz)-R2 FOR SPA802A-M2-2ZCN MODULE P870DM2	6-88-P8722-8100	
15	802.11AD CABLE 640MM MXJA02.JA640OTE MURATA CONNECTER P870DM2	6-23-7P872-010	
16	ANTENNA 1PEX4 WLAN WGT WL2 PCB AR 2.4G/5GHZ WL2=550MM N350DV	6-23-7N350-040	
17	802.11AD TAPE MYLAR(BLACK)(20*15*0.12T)P655RP6	6-40-P655S-P10	
18	FRONT COVER SCREW MYLAR PC P750ZM	6-40-P7508-030	
19	WIRE CABLE FOR EDP 450MM 19V 30PIN (1) GHT/LV CONNECTOL0682010 N870HC	6-43-N8701-010-2N	
19	WIRE CABLE FOR EDP 4K 450MM 19V 30PIN (1) GHT/LV CONN.W0346-22-HF) N87HK1	6-43-N87K1-010-1N	
19	WIRE CABLE FOR EDP 4K 450MM 19V 30PIN (1) GHT/LV CONN.W0346-22-H) CONN. SILVER BOARD PA70HS	6-43-PA701-013-N	
20	HINGE R SK7 PA70HS	6-33-PA701-0R1	

Figure A - 5
LCD

Appendix B: Schematic Diagrams

This appendix has circuit diagrams of the ***PA70EP6(-G) / PA71EP6(-G)*** notebook's PCB's. The following table indicates where to find the appropriate schematic diagram.

Diagram - Page	Diagram - Page	Diagram - Page	Diagram - Page
System Block Diagram - Page B - 2	*Frame Buffer Partition C_D - Page B - 23*	*AR Power - Page B - 44*	*NVVDD Phase 3 - Page B - 65*
Processor 1/5 - Page B - 3	*Straps and XTAL - Page B - 24*	*TPS65982ABZQZ - Page B - 45*	*FBVDDQ - Page B - 66*
Processor 2/5 - Page B - 4	*IFP I/O Interface - Page B - 25*	*ASM1543 Type-C - Page B - 46*	*LED Board - Page B - 67*
Processor 3/5 - Page B - 5	*Misc - GPIO, I2C and ROM - Page B - 26*	*PS8338B - Page B - 47*	*LID Board - Page B - 68*
Processor 4/5 - Page B - 6	*VDD - Page B - 27*	*LAN RTL8111G - Page B - 48*	*DC Board - Page B - 69*
Processor 5/5 - Page B - 7	*Decoupling - Page B - 28*	*Conn_CCD, TP, FP, HDD, TPM - Page B - 49*	*Power Board - Page B - 70*
DDR4 CHA SO-DIMM_0 - Page B - 8	*GPU GND - Page B - 29*	*Conn to Extend Board - Page B - 50*	*Click Board - Page B - 71*
DDR4 CHB SO-DIMM_0 - Page B - 9	*GPU PWR CTRL, Level Shift - Page B - 30*	*Conn, Fan - Page B - 51*	*Audio Board - Page B - 72*
PS8331B - Page B - 10	*PCH 1/5 - Page B - 31*	*5VS, 3.3V, 3.3VA, 3.3VS - Page B - 52*	*LAN Board - Page B - 73*
Panel, PWR_NV3V3 - Page B - 11	*PCH 2/5 - Page B - 32*	*VCCST, VCCSTG, VCCSFR, NV3V3 - Page B - 53*	*USB Board - Page B - 74*
Mini DP Port (Back) - Page B - 12	*PCH 3/5 - Page B - 33*	*VDD3, VDD5 - Page B - 54*	*USB Board - Page B - 75*
Mini DP Port (Front) - Page B - 13	*PCH 4/5 - Page B - 34*	*DDR 1.2V, 0.6VS, 2.5V - Page B - 55*	*Card Reader - Page B - 76*
HDMI Connector - Page B - 14	*PCH 5/5 - Page B - 35*	*1.8VA, 1.05VA - Page B - 56*	*USB Port - Page B - 77*
VGA PCI Express - Page B - 15	*KBC IT8587 - Page B - 36*	*Power VCCIO - Page B - 57*	*USB Port - Page B - 78*
GPU Frame Buffer Partition - Page B - 16	*RGB and White KB LED - Page B - 37*	*VCore, VCCGT, VCCSA 1/3 - Page B - 58*	
Frame Buffer Partition A - Page B - 17	*M.2 SSD - Page B - 38*	*VCore, VCCGT, VCCSA 2/3 - Page B - 59*	
Frame Buffer Partition B - Page B - 18	*M.2 WLAN+BT - Page B - 39*	*VCore, VCCGT, VCCSA 3/3 - Page B - 60*	
Frame Buffer Partition A_B - Page B - 19	*Audio Codec ALC892 - Page B - 40*	*AC_In, Charger - Page B - 61*	
GPU Frame Buffer C/D - Page B - 20	*Audio Subwoofer - Page B - 41*	*1V8_AON/RUN, PEX_VDD - Page B - 62*	
Frame Buffer Partition C - Page B - 21	*Audio Amplifier - Page B - 42*	*NVVDDS - Page B - 63*	
Frame Buffer Partition D - Page B - 22	*AR_TBT - Page B - 43*	*NVVDD Phase 1 & 2 - Page B - 64*	

Table B - 1
SCHEMATIC DIAGRAMS

Version Note

The schematic diagrams in this chapter are based upon version 6-7P-PA7EB-003. If your mainboard (or other boards) are a later version, please check with the Service Center for updated diagrams (if required).

System Block Diagram

Sheet 1 of 77
System Block Diagram

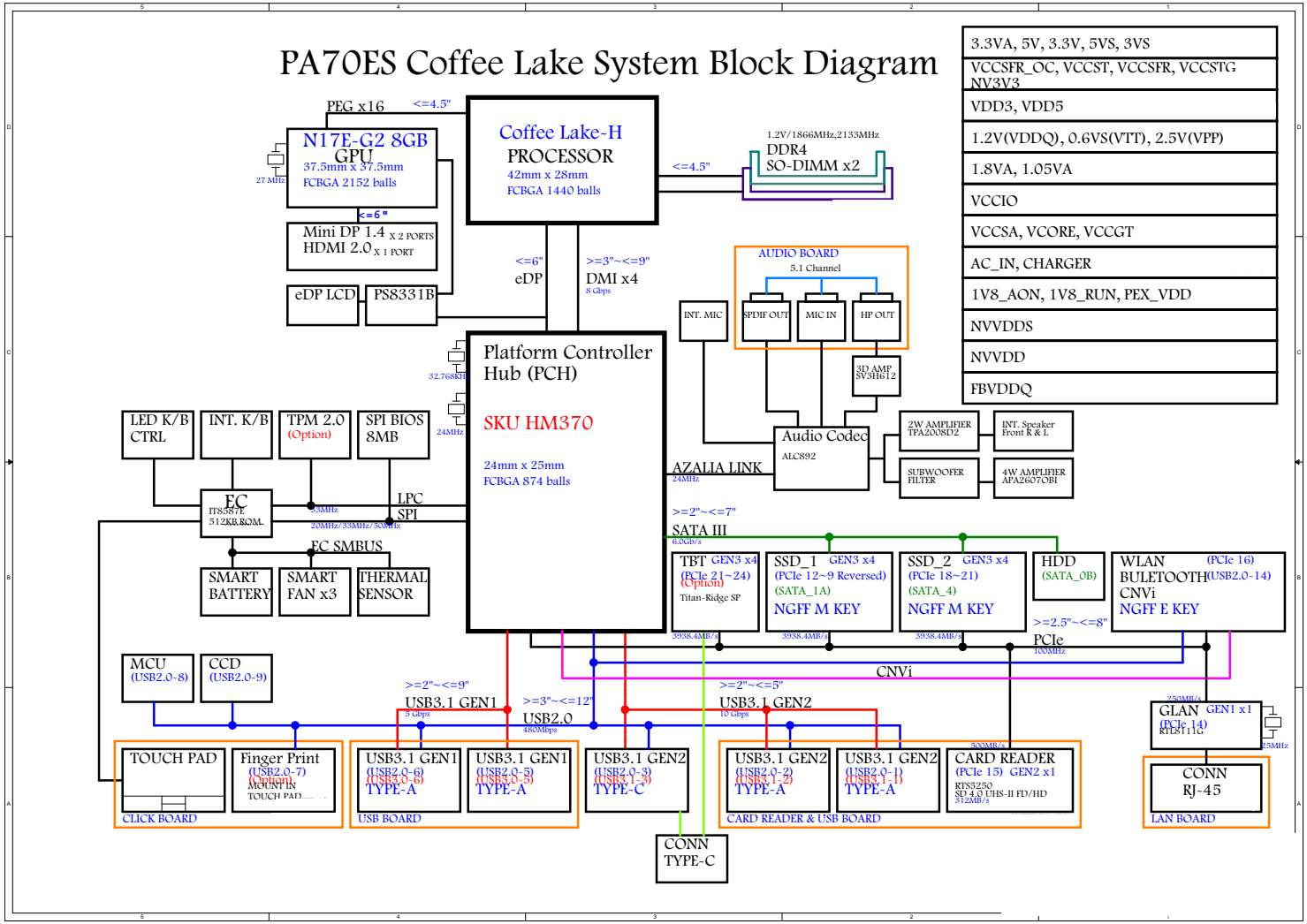

Processor 1/5

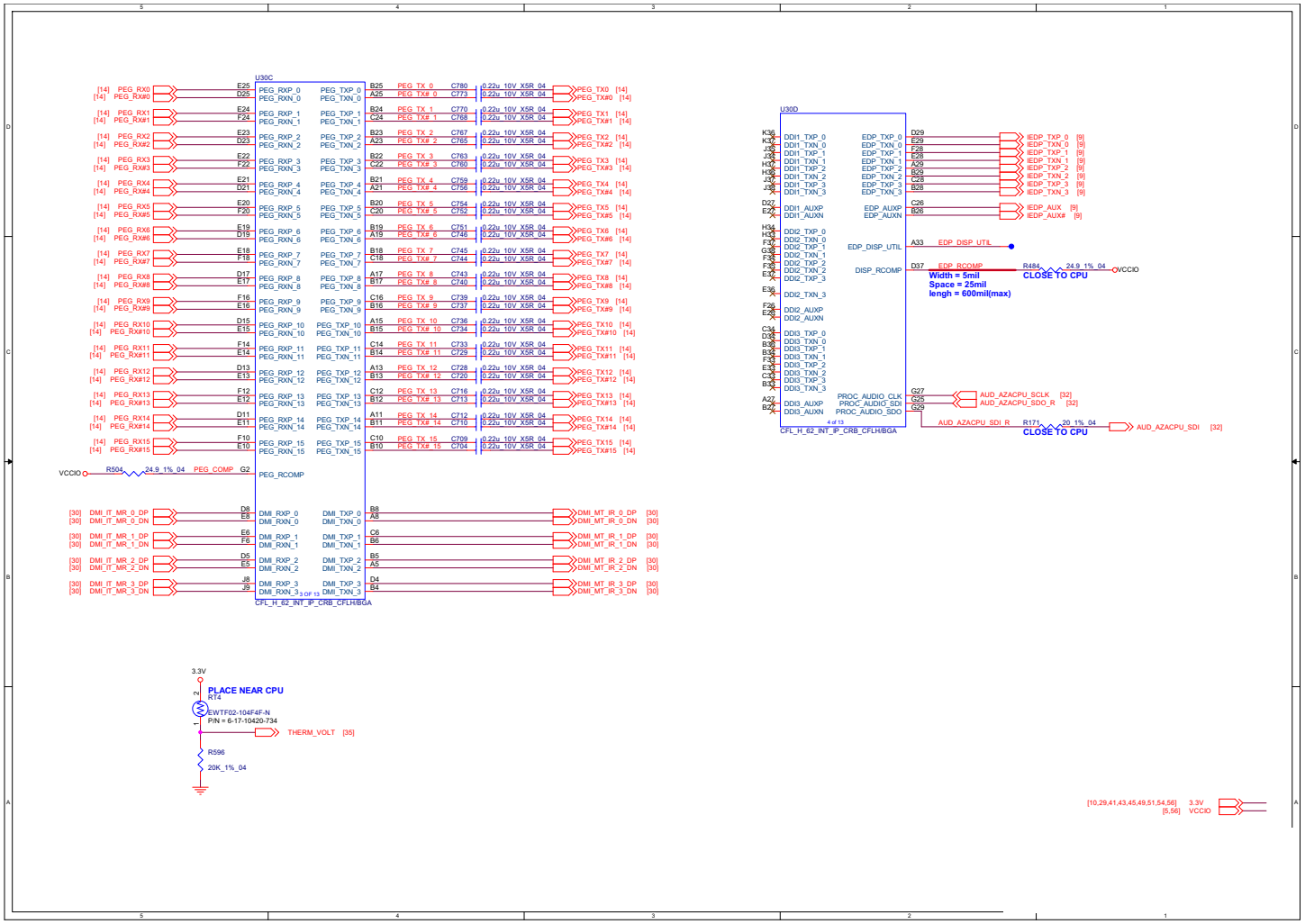

Sheet 2 of 77
Processor 1/5

Processor 2/5

Sheet 3 of 77
Processor 2/5

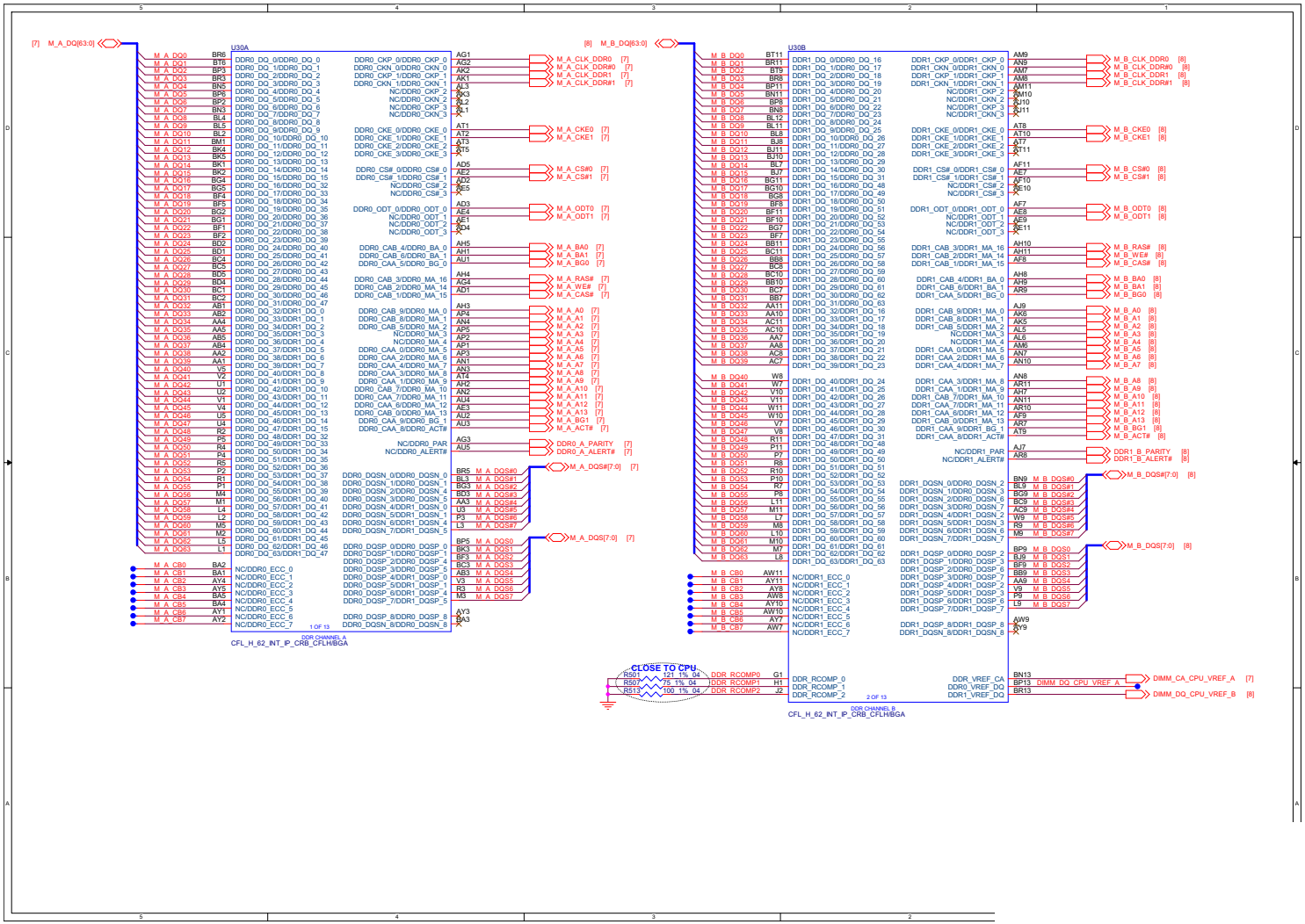

Processor 3/5

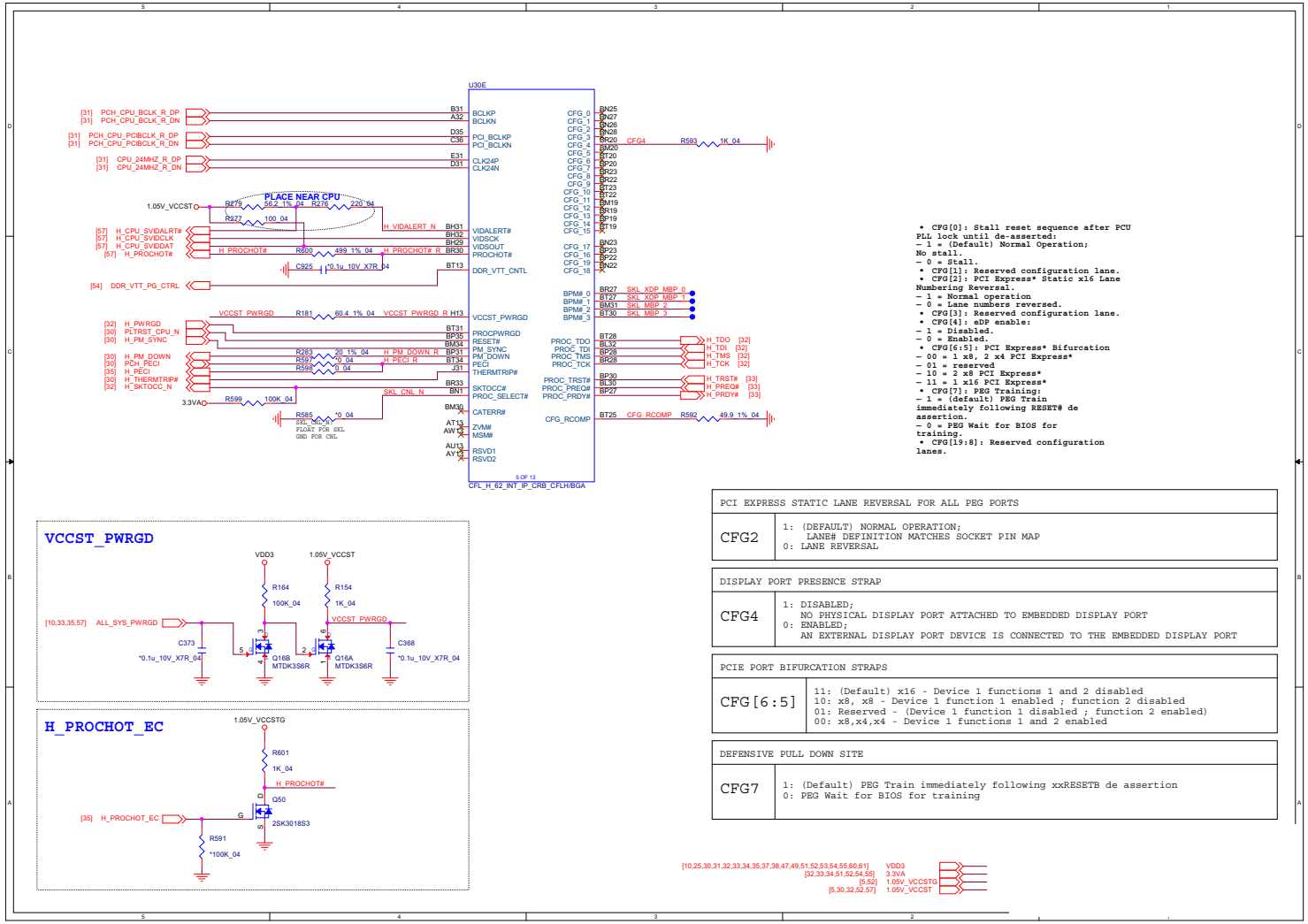

• CFG[0]: Stall reset sequence after PCU PLL lock until de-asserted:
– 1 = (Default) Normal Operation; No stall.
– 0 = Stall.
• CFG[1]: Reserved configuration lane.
• CFG[2]: PCI Express* Static x16 Lane Numbering Reversal.
– 1 = Normal operation
– 0 = Lane numbers reversed.
• CFG[3]: Reserved configuration lane.
• CFG[4]: eDP enable:
– 1 = Disabled.
– 0 = Enabled.
• CFG[6:5]: PCI Express* Bifurcation
– 00 = 1 x8, 2 x4 PCI Express*
– 01 = reserved
– 10 = 2 x8 PCI Express*
– 11 = 1 x16 PCI Express*
• CFG[7]: PEG Training:
– 1 = (default) PEG Train immediately following RESET# de assertion.
– 0 = PEG Wait for BIOS for training.
• CFG[19:8]: Reserved configuration lanes.

PCI EXPRESS STATIC LANE REVERSAL FOR ALL PEG PORTS	
CFG2	1: (DEFAULT) NORMAL OPERATION; LANE# DEFINITION MATCHES SOCKET PIN MAP 0: LANE REVERSAL

DISPLAY PORT PRESENCE STRAP	
CFG4	1: DISABLED; NO PHYSICAL DISPLAY PORT ATTACHED TO EMBEDDED DISPLAY PORT 0: ENABLED; AN EXTERNAL DISPLAY PORT DEVICE IS CONNECTED TO THE EMBEDDED DISPLAY PORT

PCIE PORT BIFURCATION STRAPS	
CFG[6:5]	11: (Default) x16 - Device 1 functions 1 and 2 disabled 10: x8, x8 - Device 1 function 1 enabled ; function 2 disabled 01: Reserved - (Device 1 function 1 disabled ; function 2 enabled) 00: x8,x4,x4 - Device 1 functions 1 and 2 enabled

DEFENSIVE PULL DOWN SITE	
CFG7	1: (Default) PEG Train immediately following xxRESETB de assertion 0: PEG Wait for BIOS for training

Sheet 4 of 77
Processor 3/5

Processor 4/5

Sheet 5 of 77
Processor 4/5

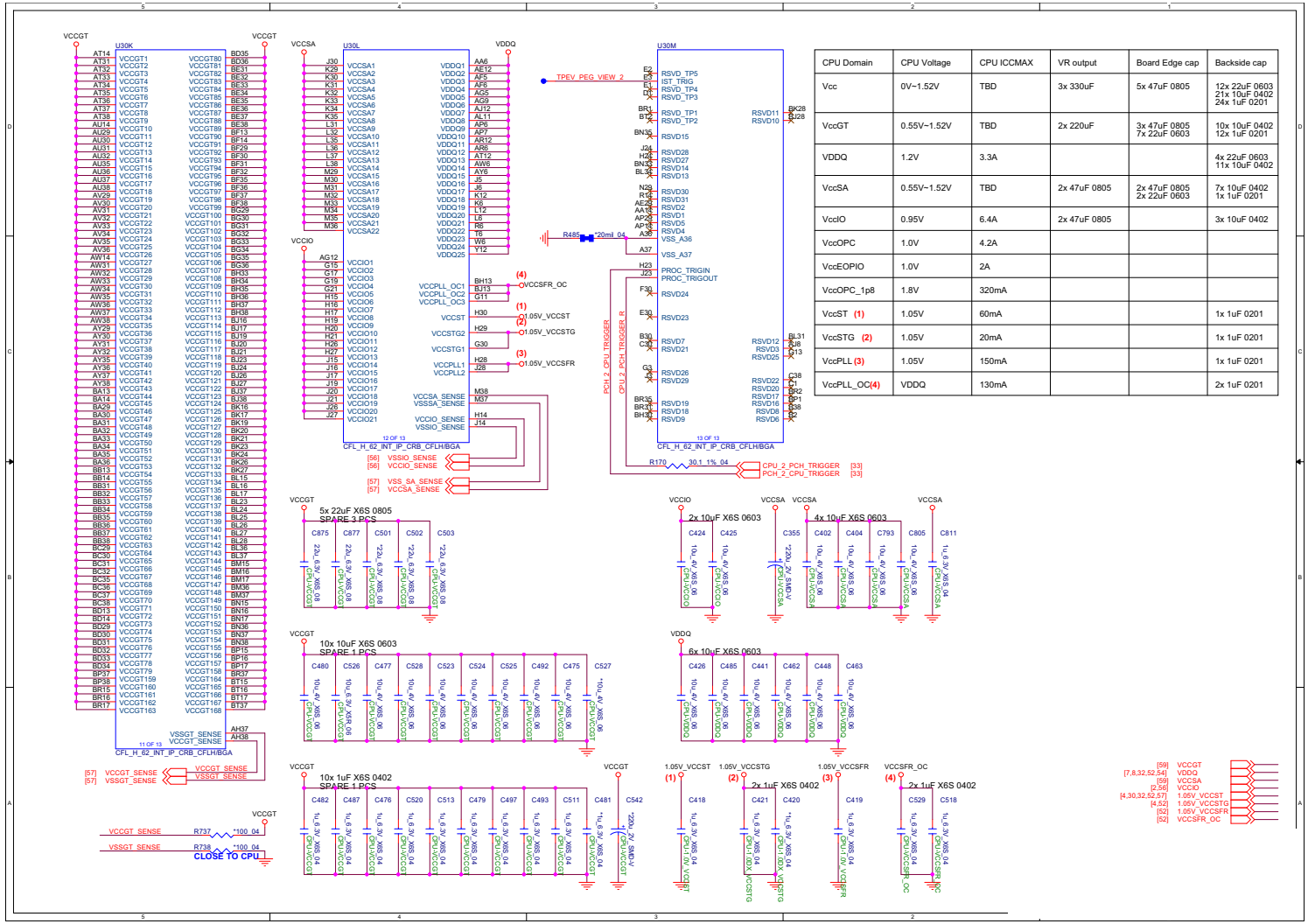

CPU Domain	CPU Voltage	CPU ICCMAX	VR output	Board Edge cap	Backside cap
Vcc	0V~1.52V	TBD	3x 330uF	5x 47uF 0805	12x 22uF 0603 21x 10uF 0402 24x 1uF 0201
VccGT	0.55V~1.52V	TBD	2x 220uF	3x 47uF 0805 7x 22uF 0603	10x 10uF 0402 12x 1uF 0201
VDDQ	1.2V	3.3A			4x 22uF 0603 11x 10uF 0402
VccSA	0.55V~1.52V	TBD	2x 47uF 0805	2x 47uF 0805 2x 22uF 0603	7x 10uF 0402 1x 1uF 0201
VccIO	0.95V	6.4A	2x 47uF 0805		3x 10uF 0402
VccOPC	1.0V	4.2A			
VccEOPIO	1.0V	2A			
VccOPC_1p8	1.8V	320mA			
VccST (1)	1.05V	60mA			1x 1uF 0201
VccSTG (2)	1.05V	20mA			1x 1uF 0201
VccPLL (3)	1.05V	150mA			1x 1uF 0201
VccPLL_OC(4)	VDDQ	130mA			2x 1uF 0201

Processor 5/5

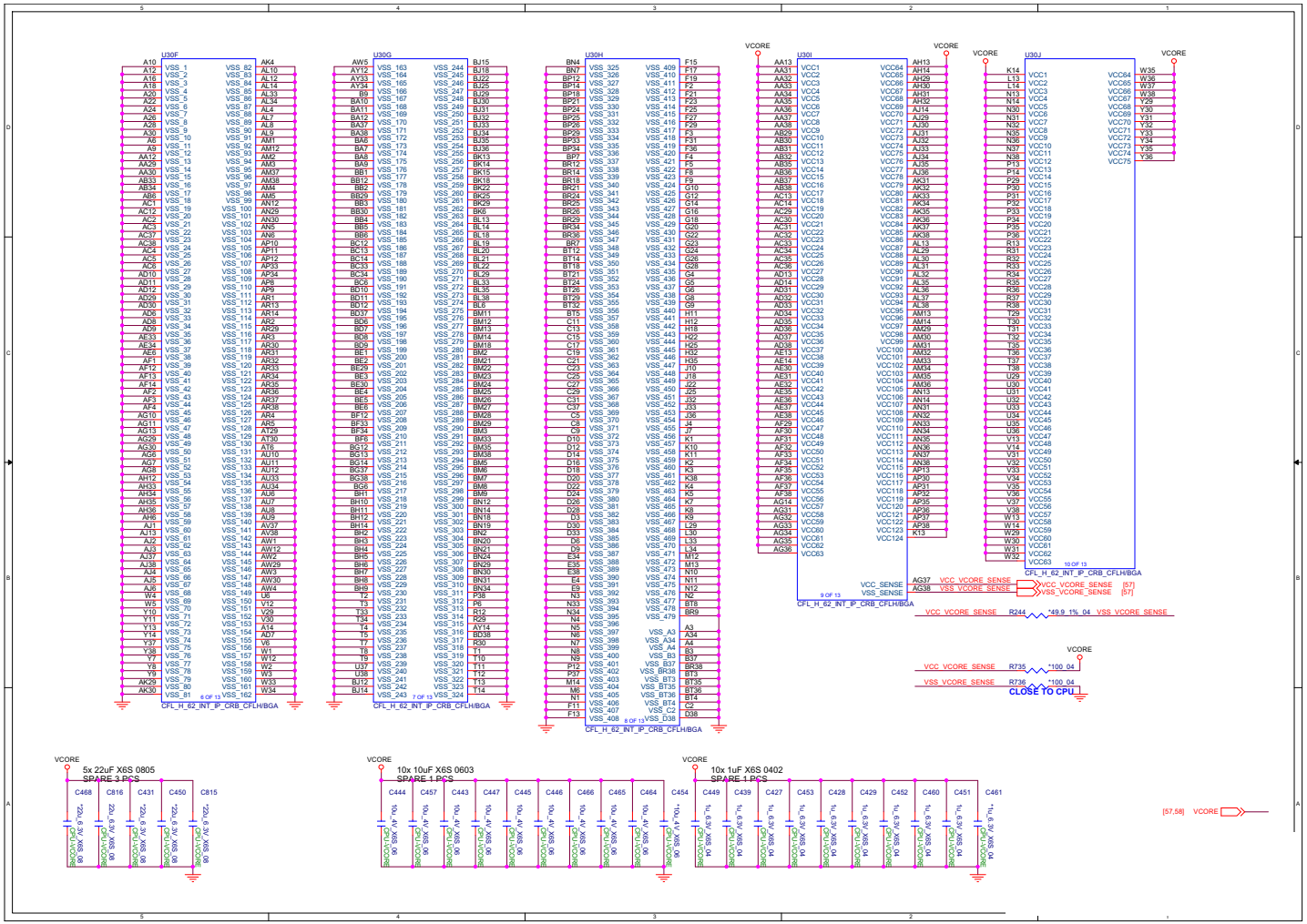

Sheet 6 of 77
Processor 5/5

DDR4 CHA SO-DIMM_0

Sheet 7 of 77
DDR4 CHA SO-DIMM_0

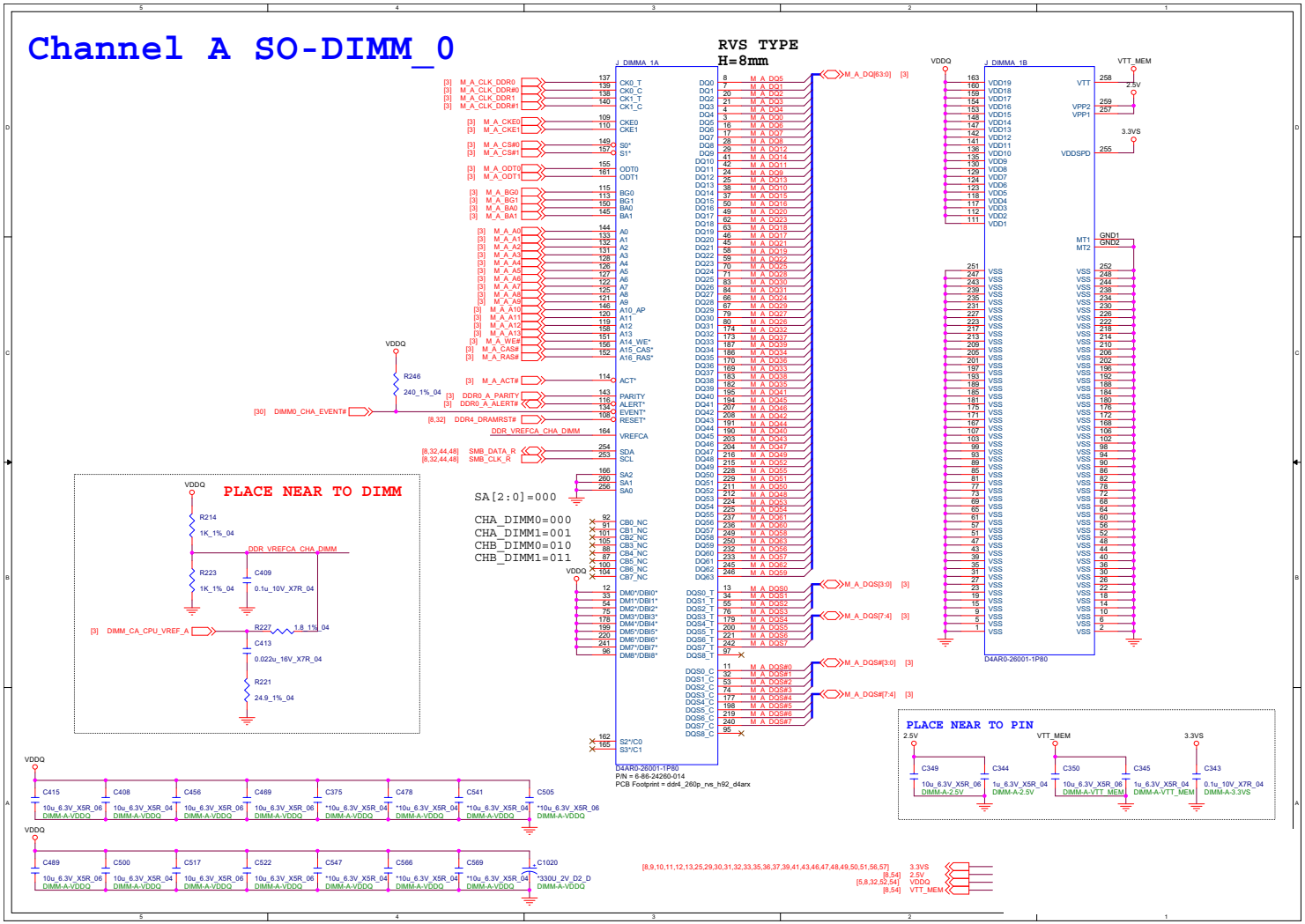

DDR4 CHB SO-DIMM_0

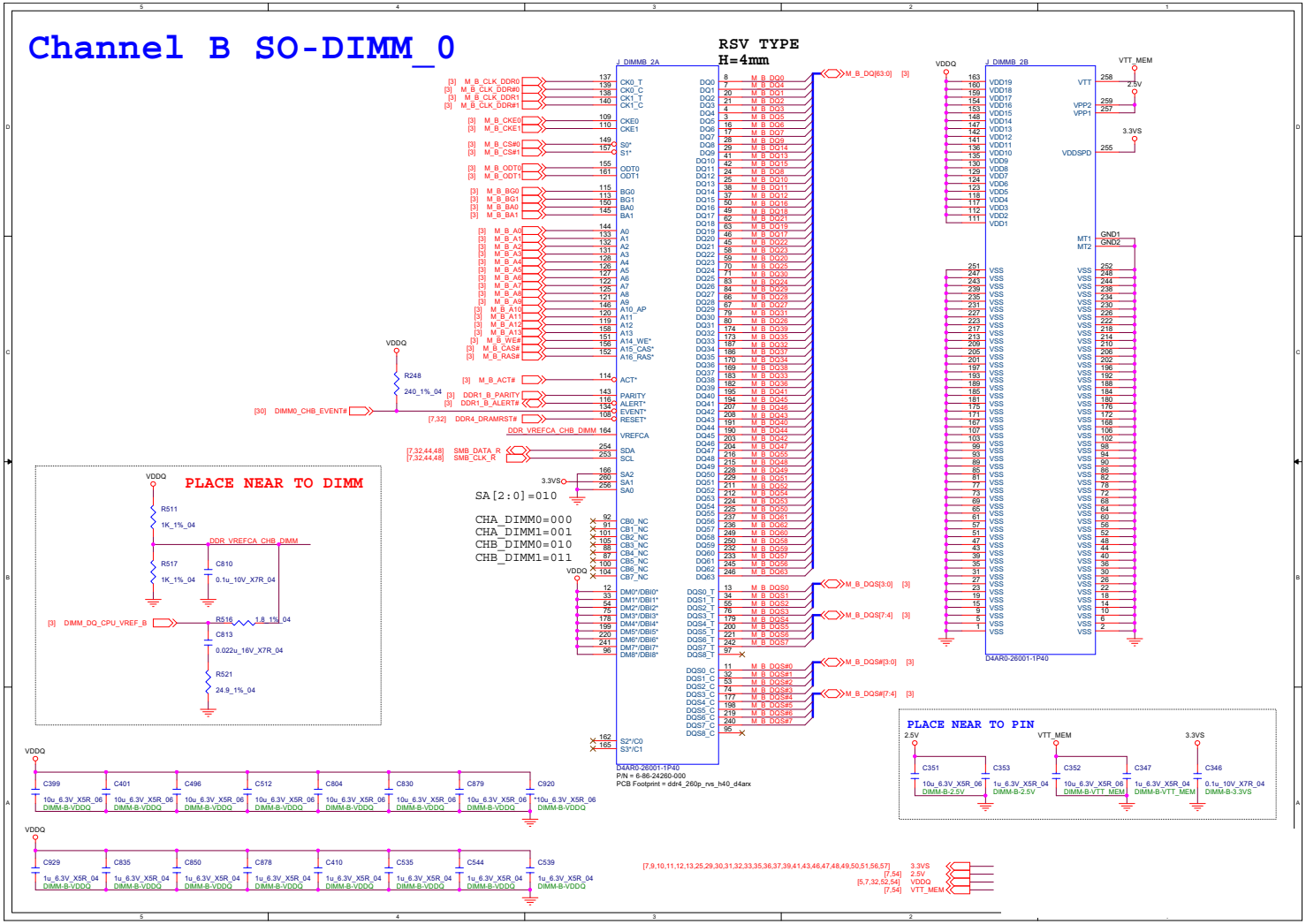

Sheet 8 of 77
DDR4 CHB SO-DIMM_0

PS8331B

Sheet 9 of 77
PS8331B

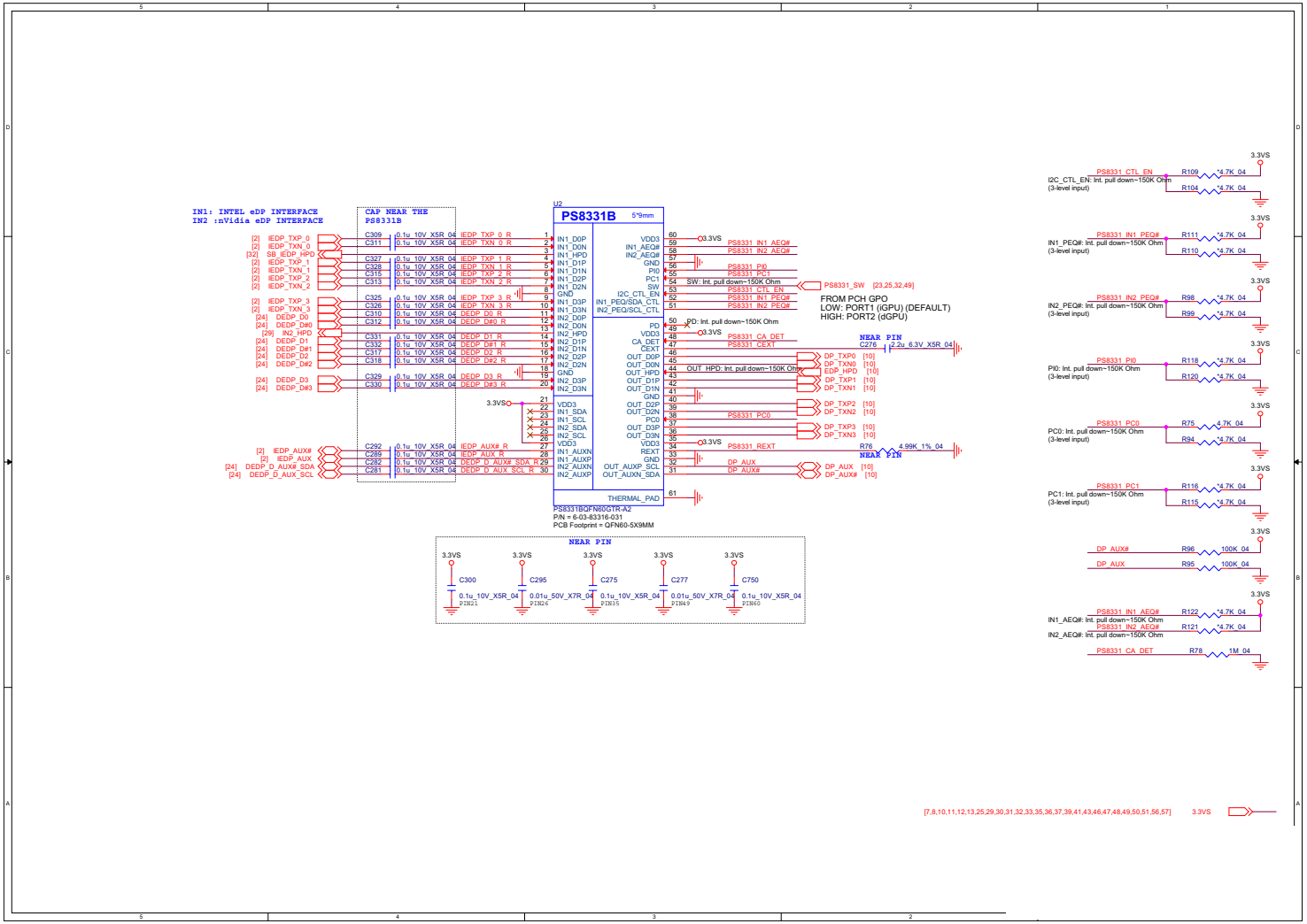

Panel, PWR_NV3V3

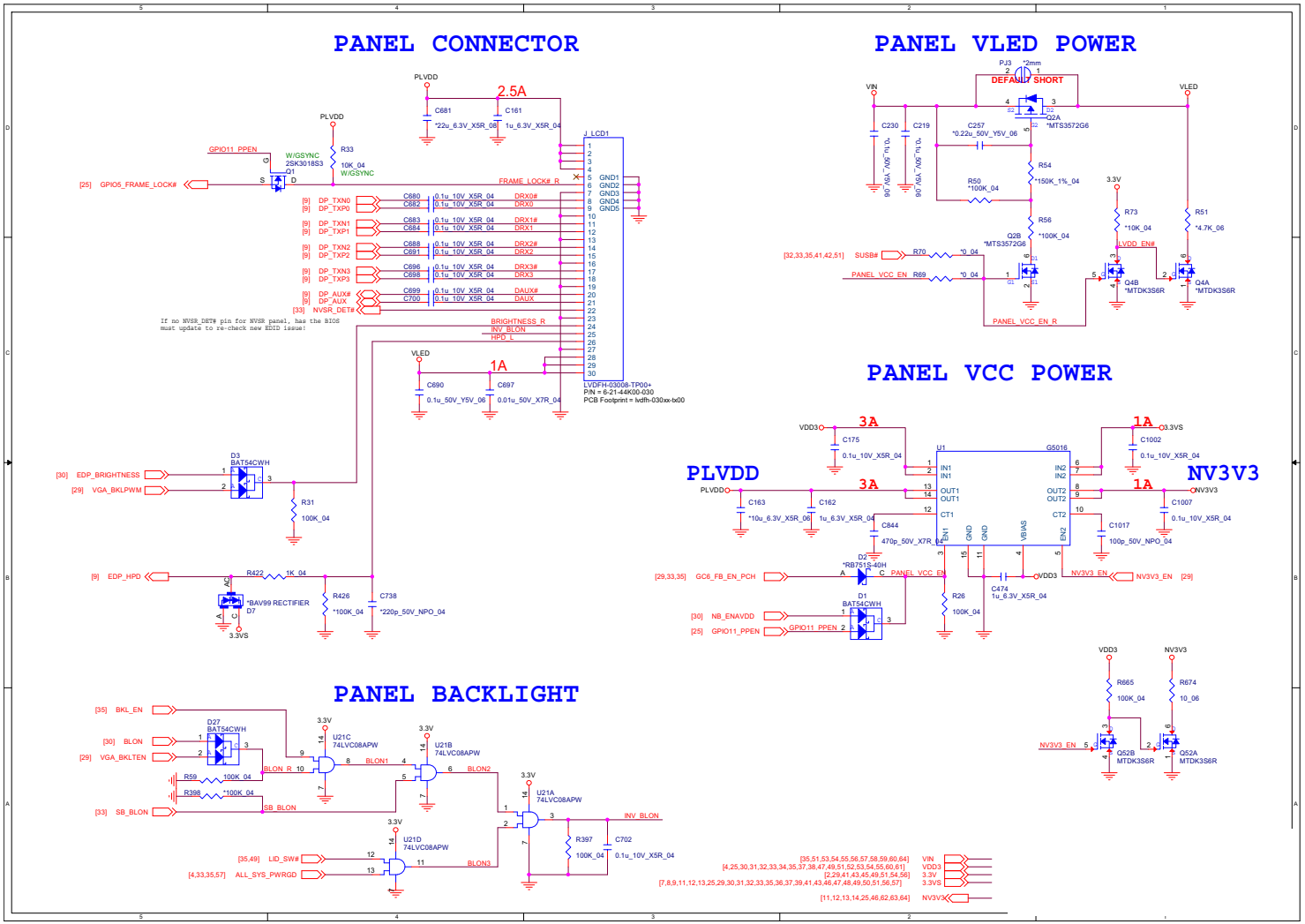

Sheet 10 of 77
Panel, PWR_NV3V3

Mini DP Port (Back)

Sheet 11 of 77
Mini DP Port (Back)

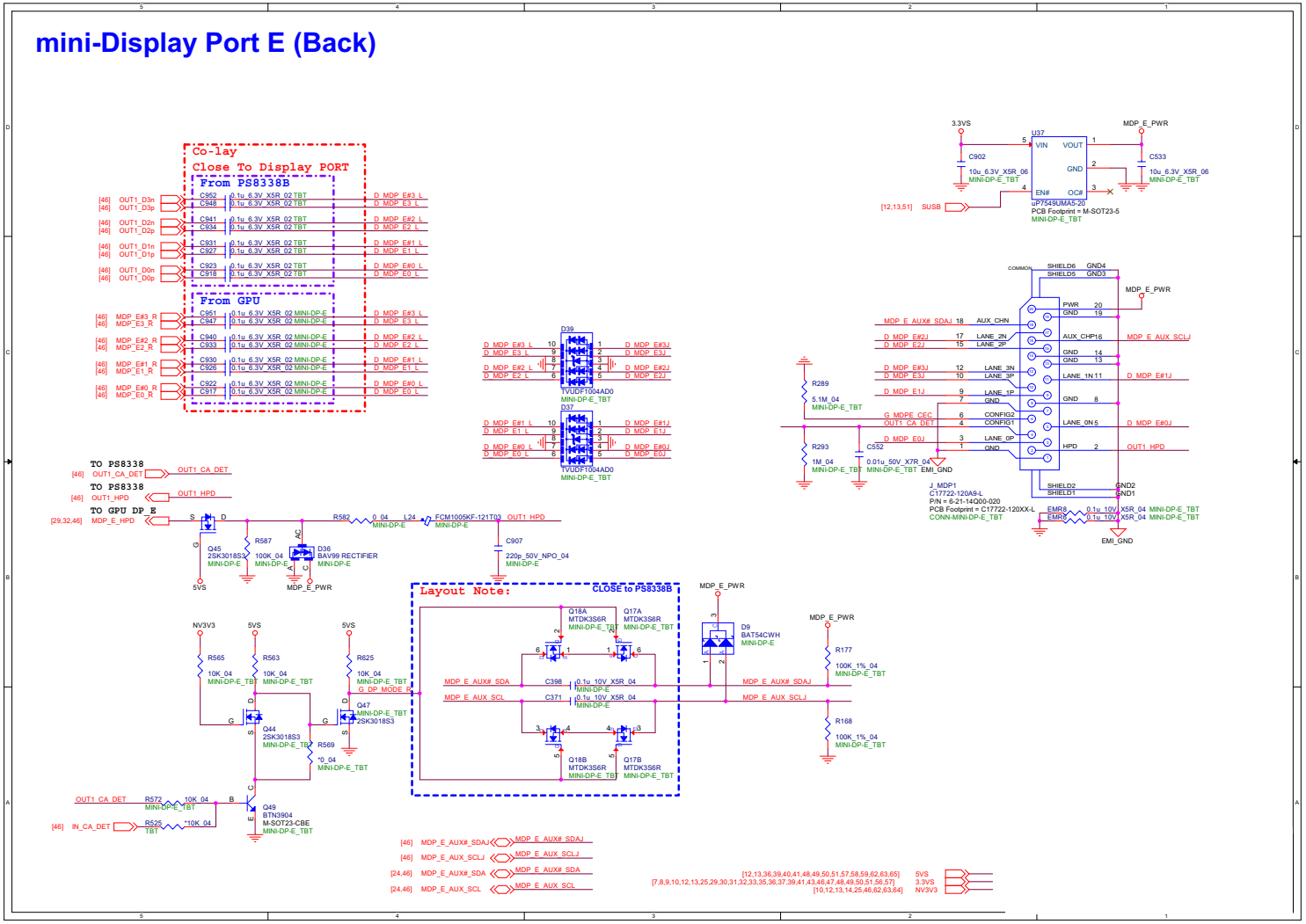

Mini DP Port (Front)

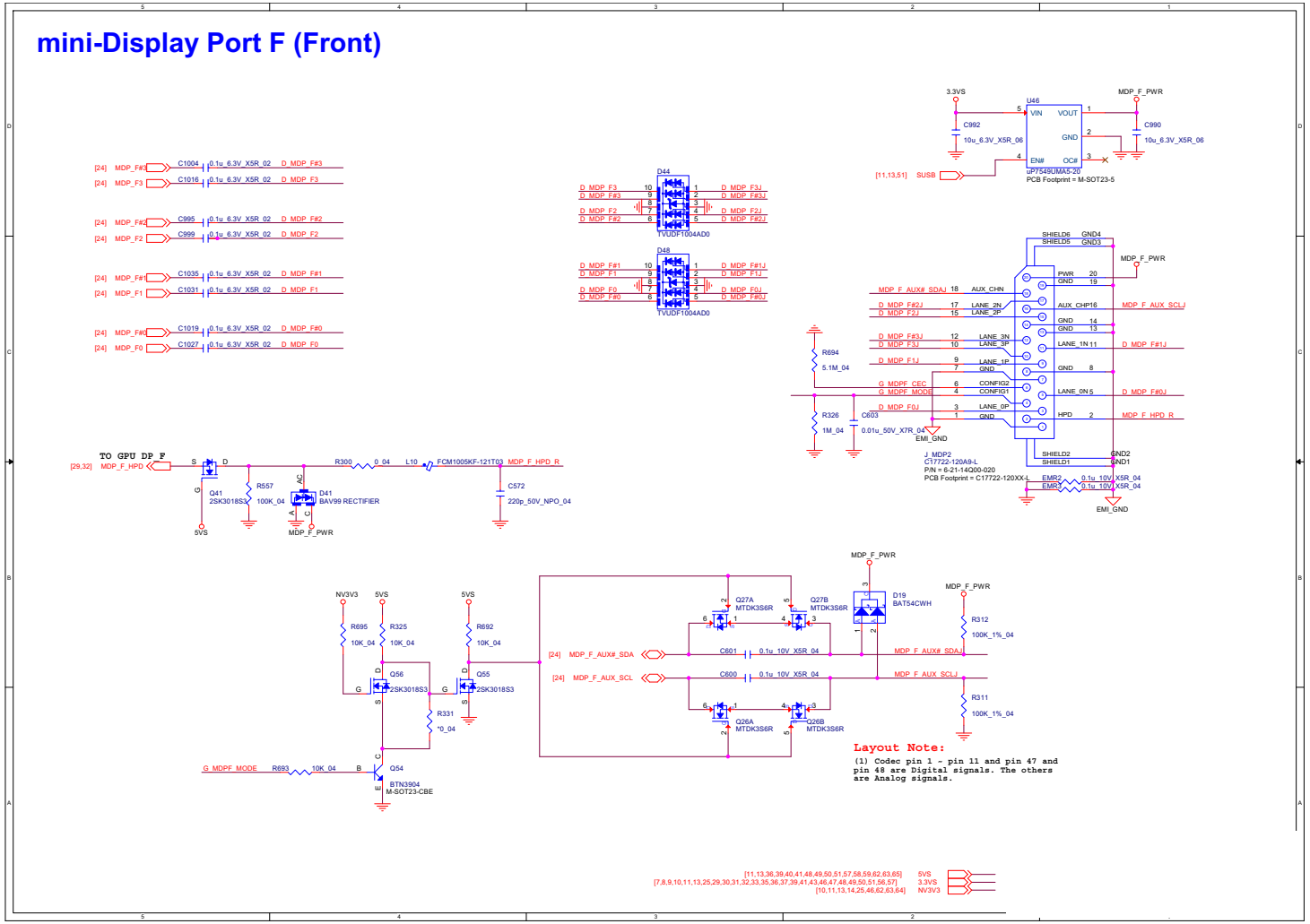

Sheet 12 of 77
Mini DP Port (Front)

B.Schematic Diagrams

HDMI Connector

Sheet 13 of 77
HDMI Connector

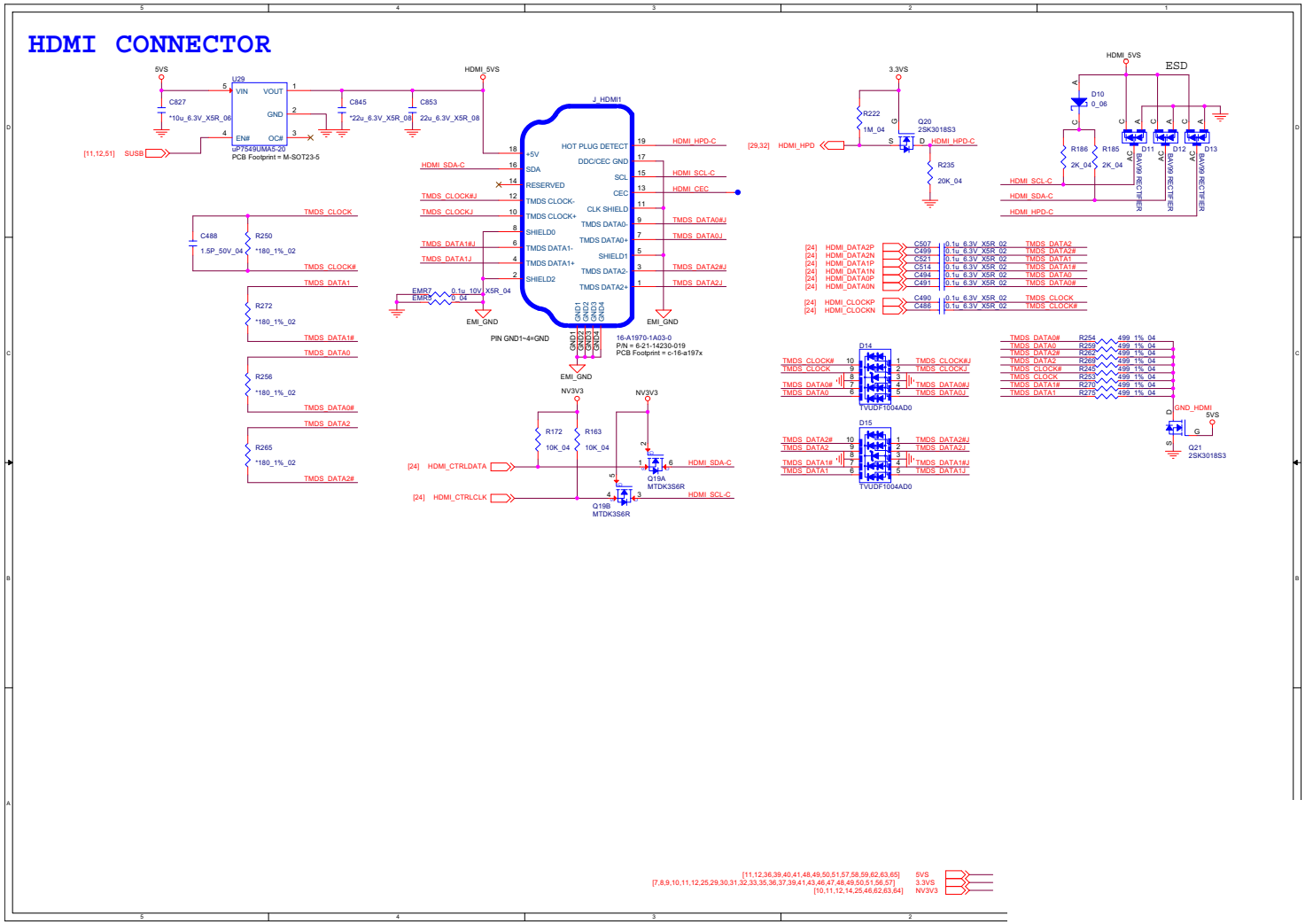

VGA PCI Express

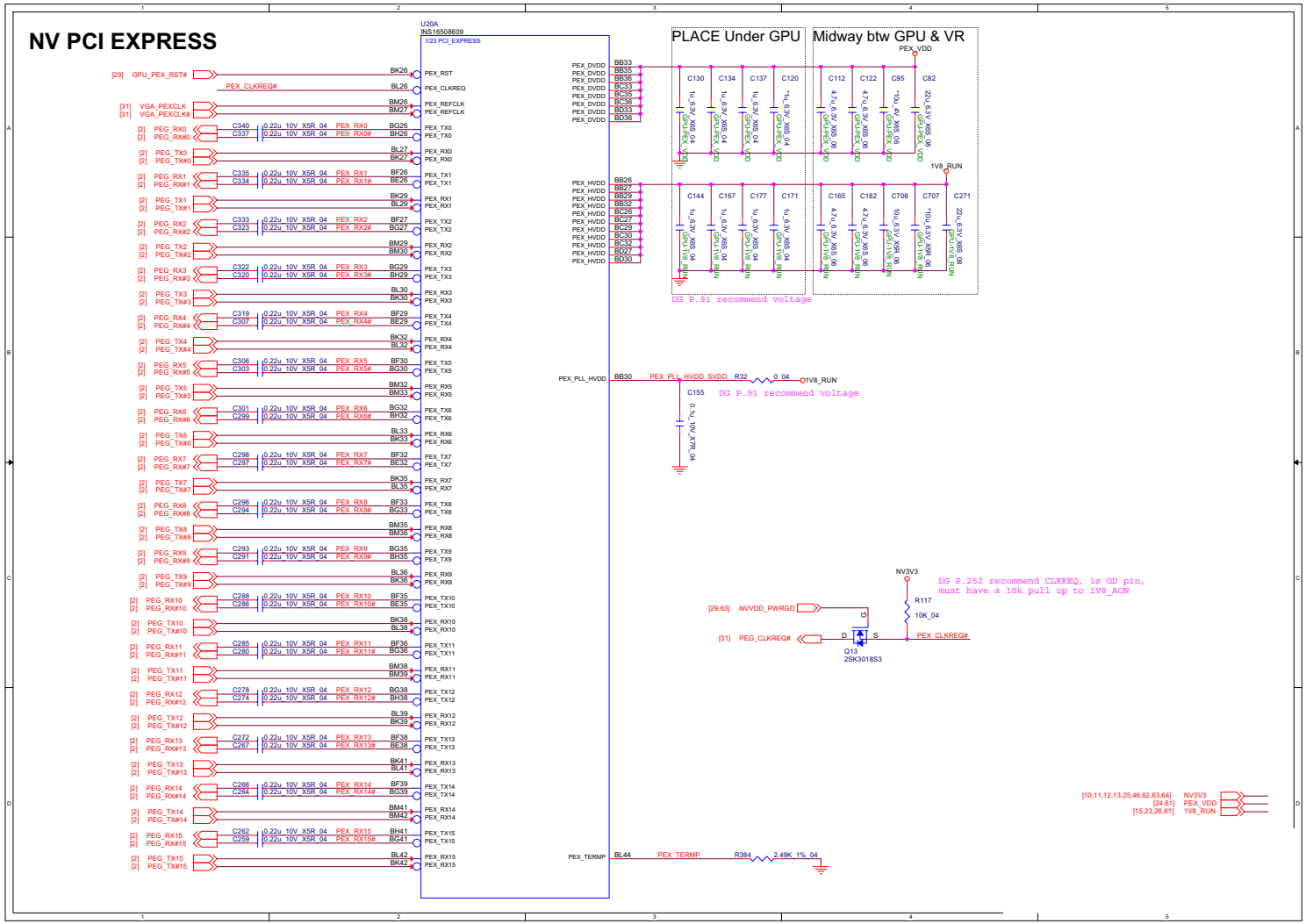

Sheet 14 of 77
VGA PCI Express

GPU Frame Buffer Partition

Sheet 15 of 77
GPU Frame Buffer Partition

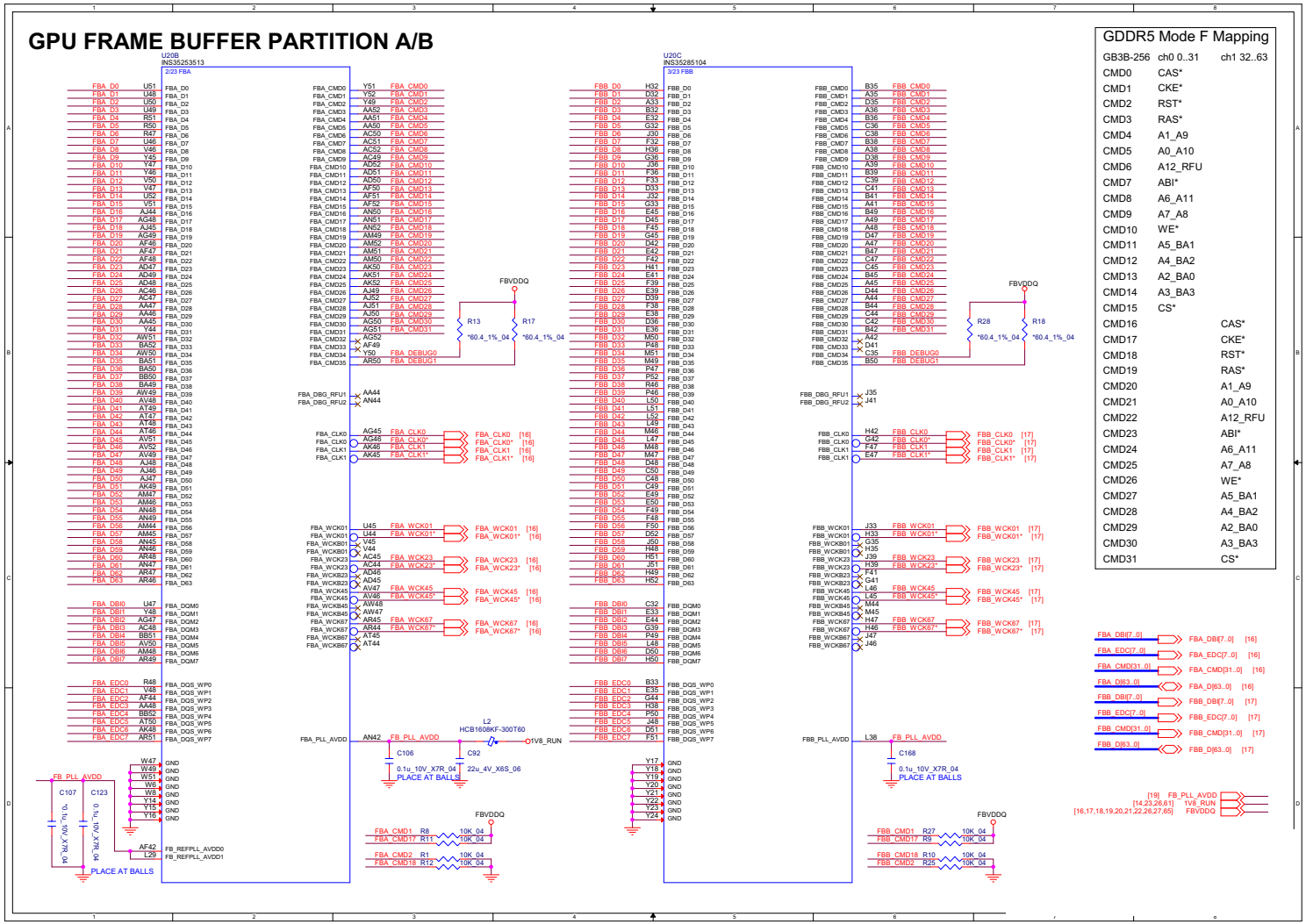

Frame Buffer Partition A

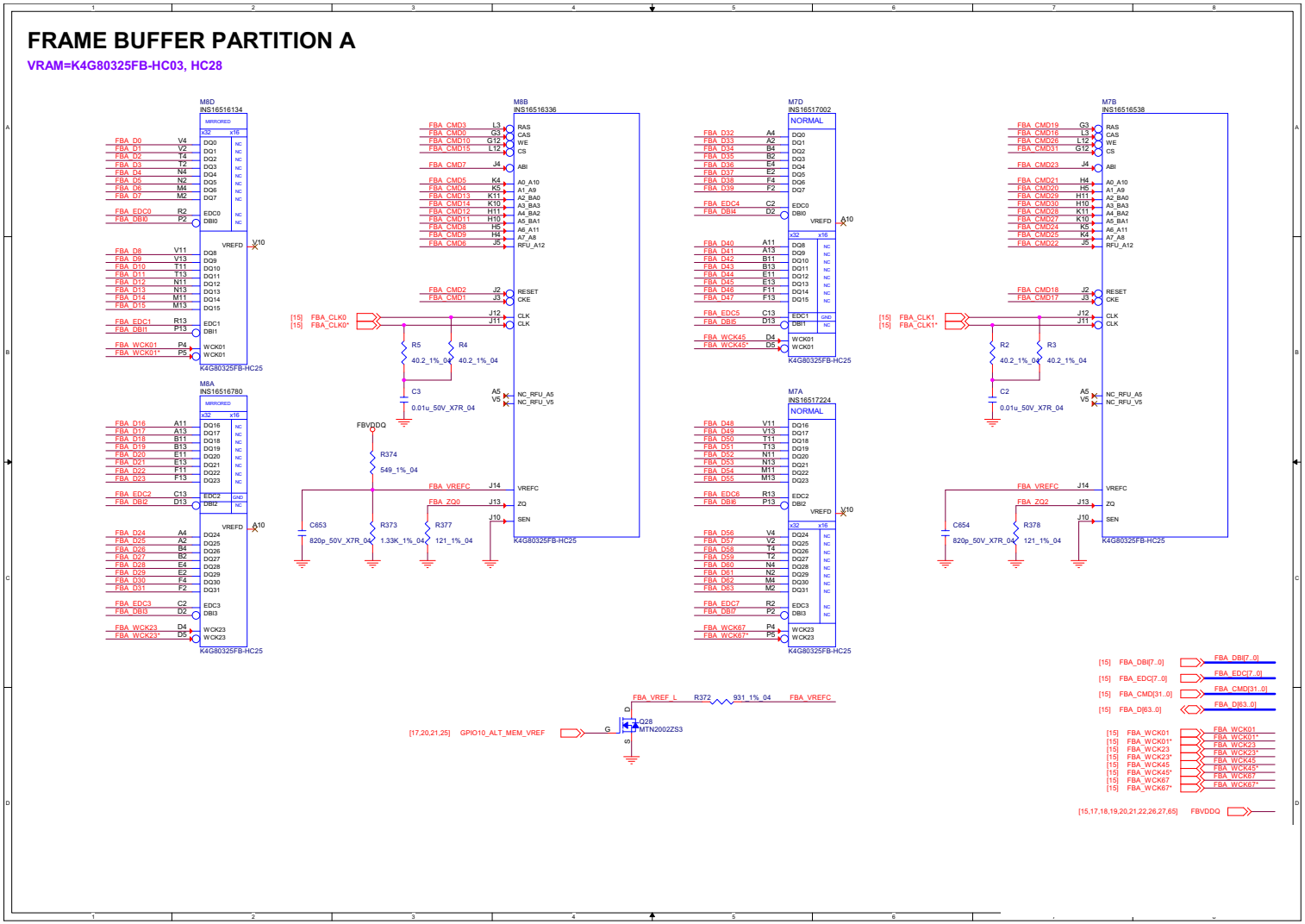

Sheet 16 of 77
Frame Buffer
Partition A

B.Schematic Diagrams

Frame Buffer Partition B

Sheet 17 of 77
Frame Buffer Partition B

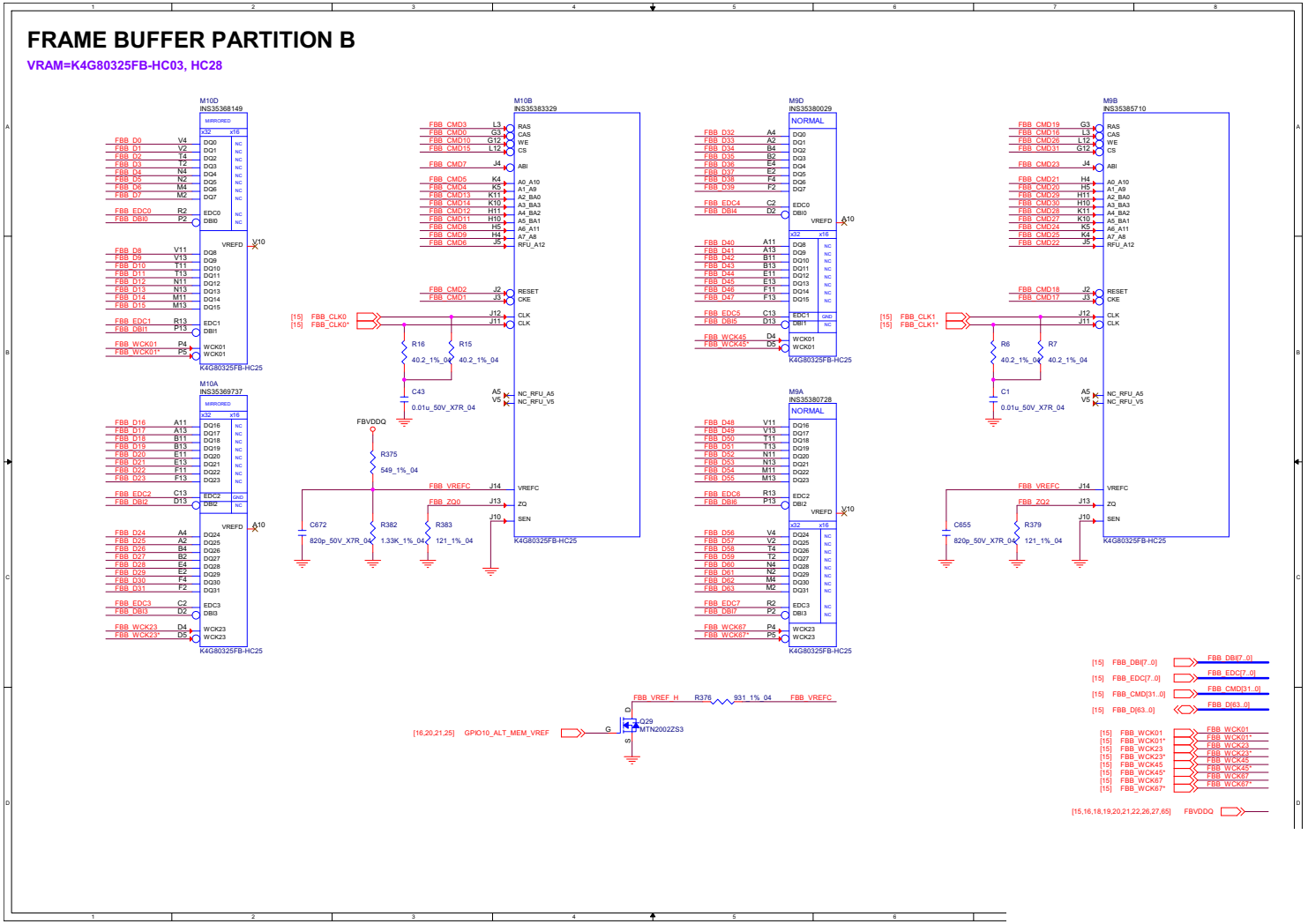

Frame Buffer Partition A_B

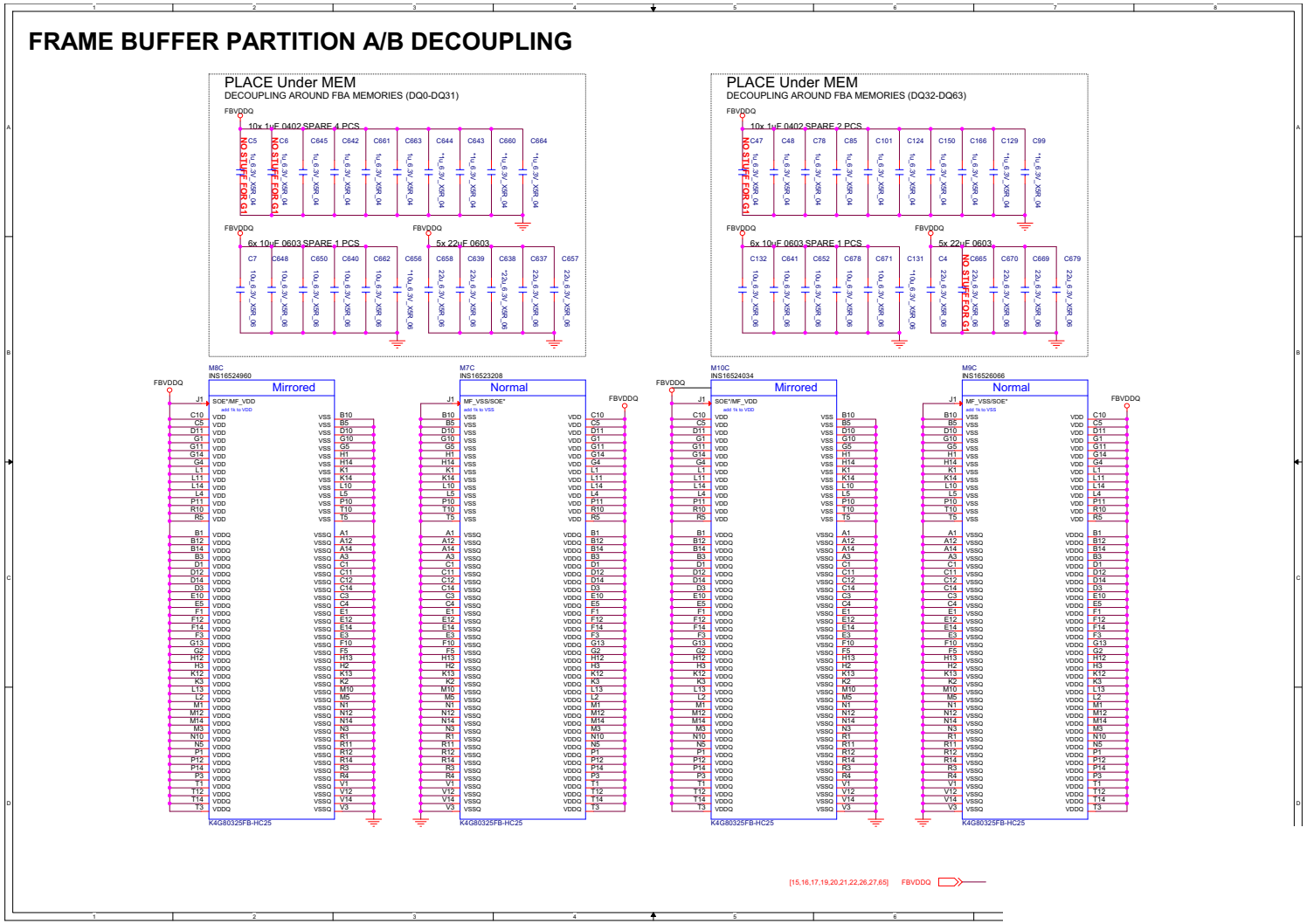

Sheet 18 of 77
Frame Buffer
Partition A_B

GPU Frame Buffer C/D

Sheet 19 of 77
GPU Frame Buffer C/D

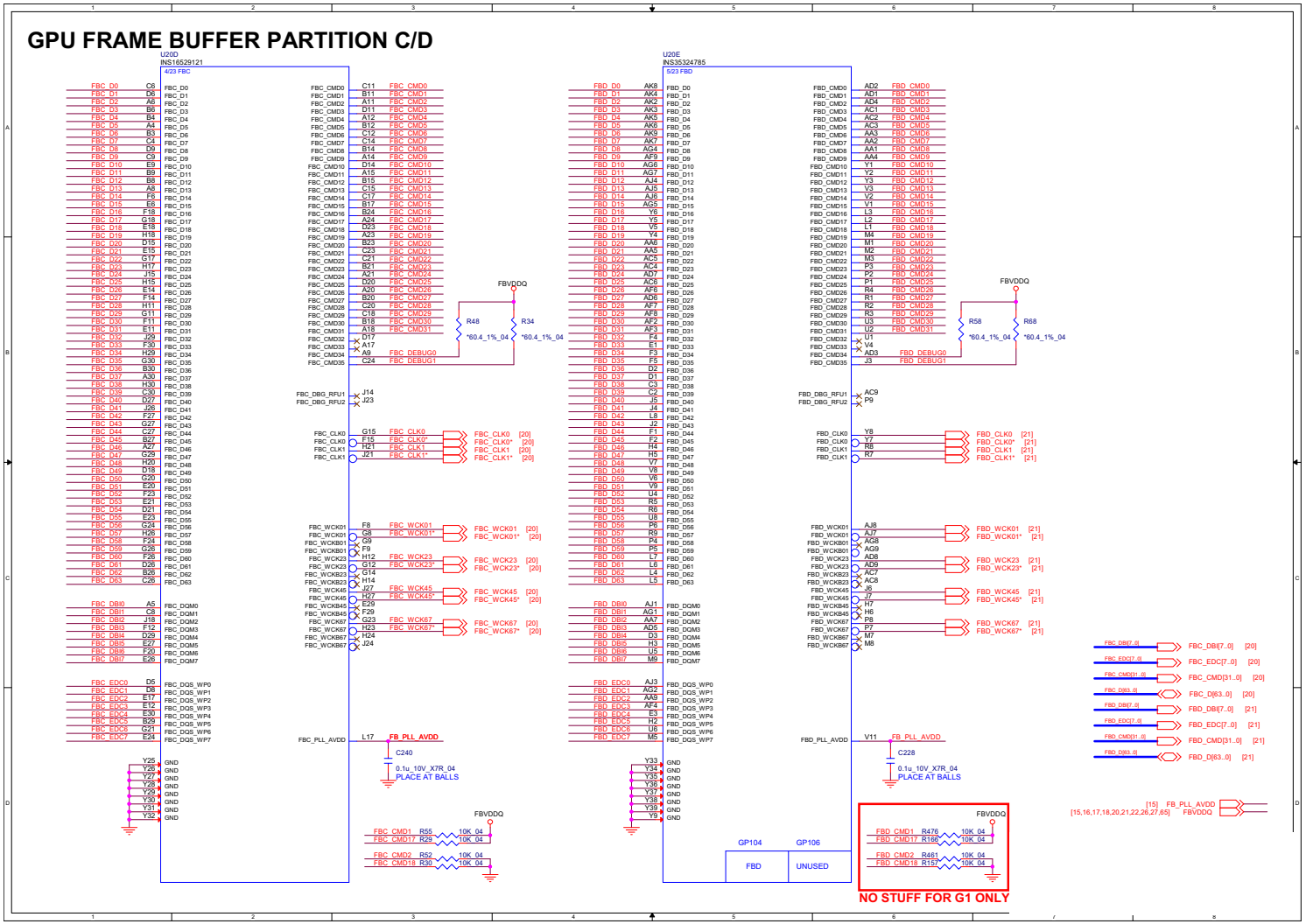

Frame Buffer Partition C

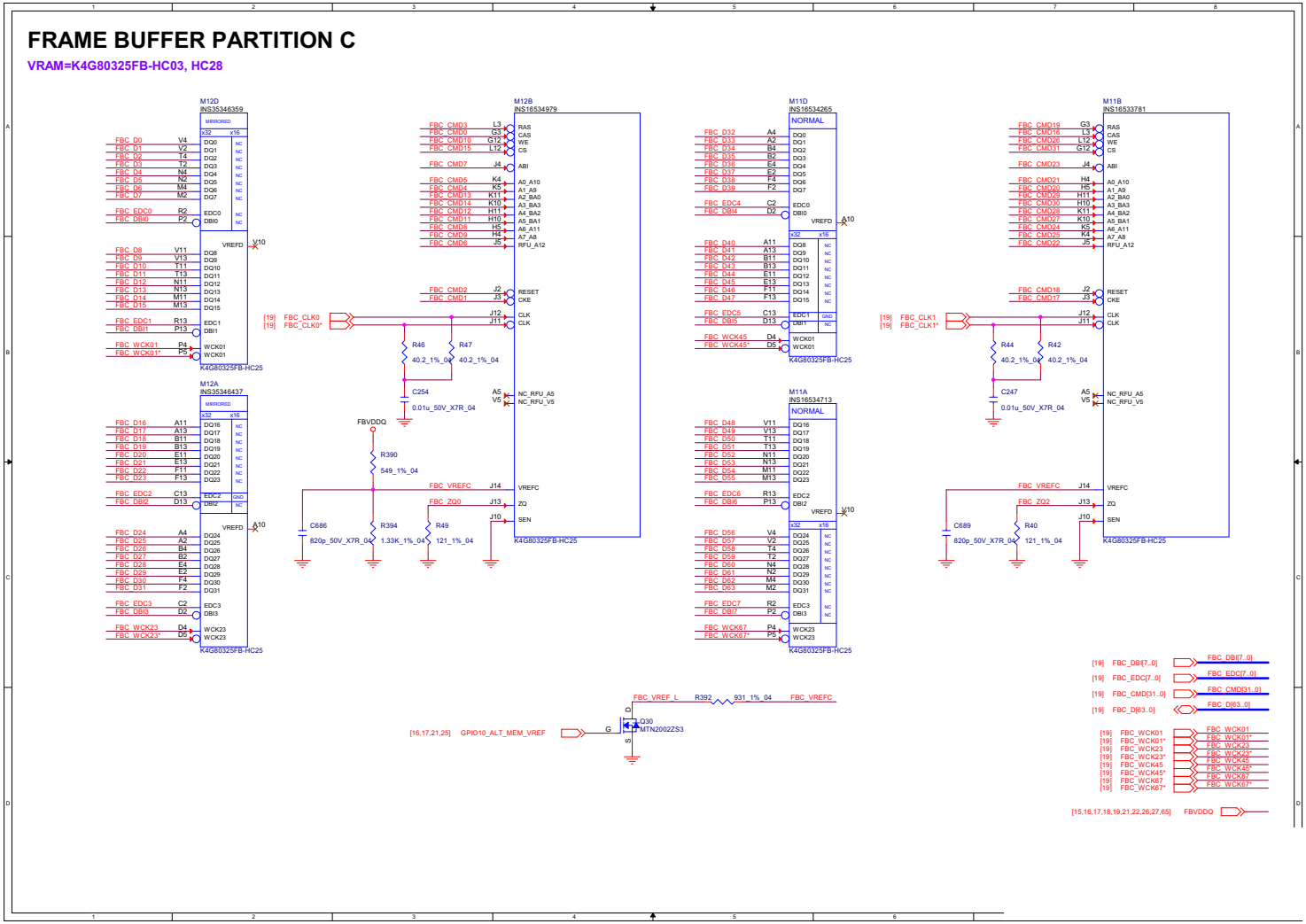

Sheet 20 of 77
Frame Buffer
Partition C

B.Schematic Diagrams

Frame Buffer Partition D

Sheet 21 of 77
Frame Buffer Partition D

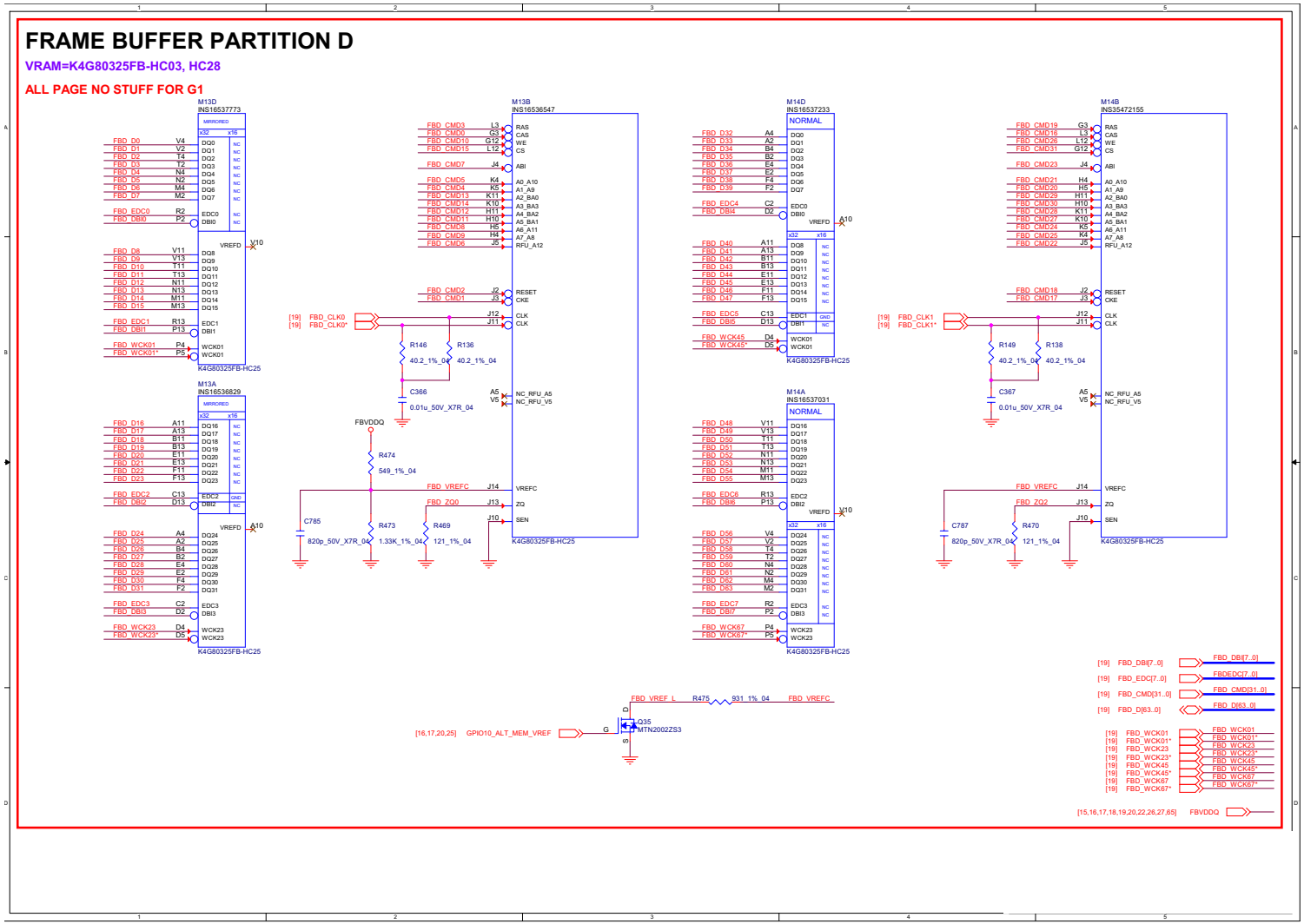

Frame Buffer Partition C_D

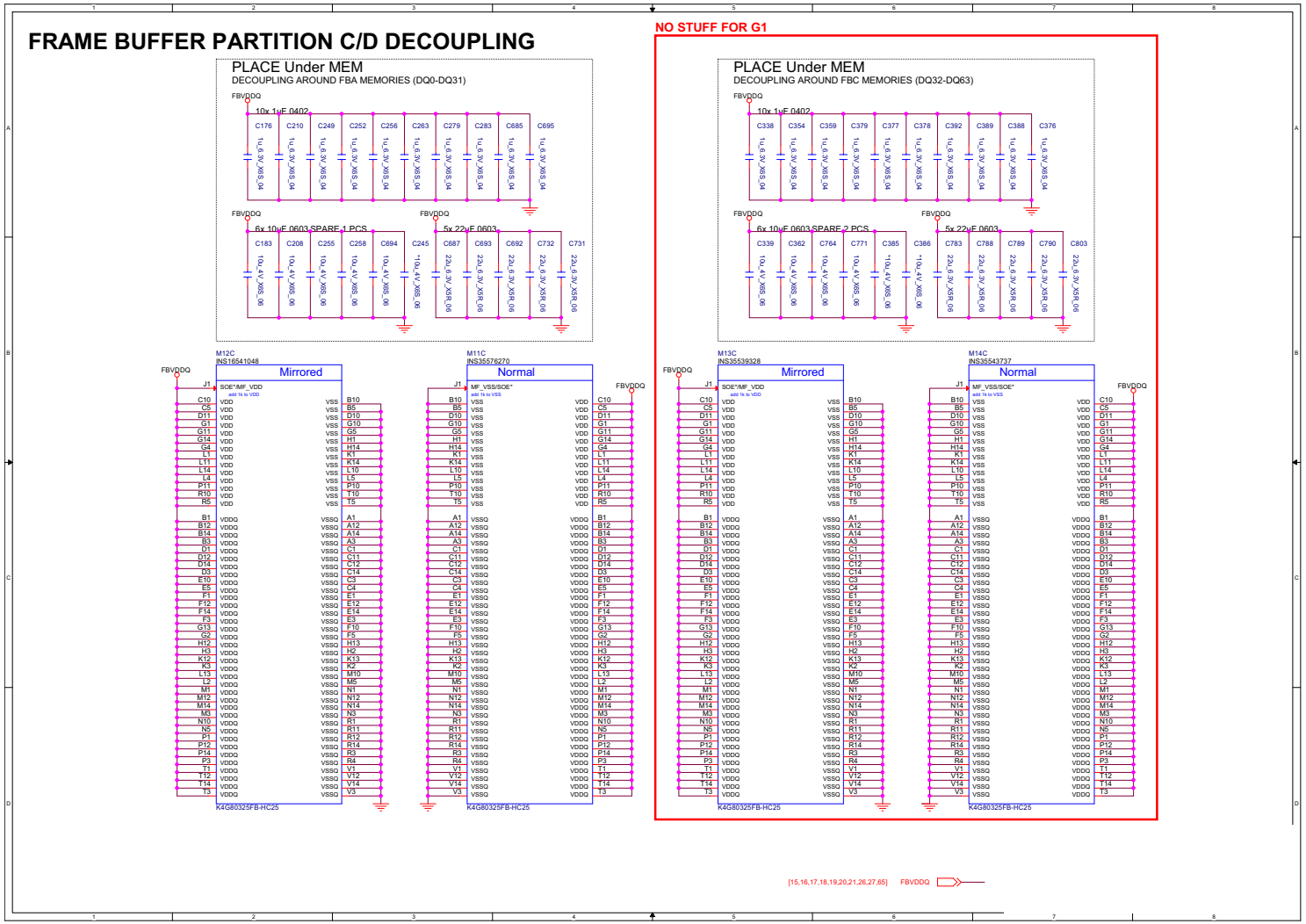

Sheet 22 of 77
Frame Buffer
Partition C_D

Straps and XTAL

Sheet 23 of 77
Straps and XTAL

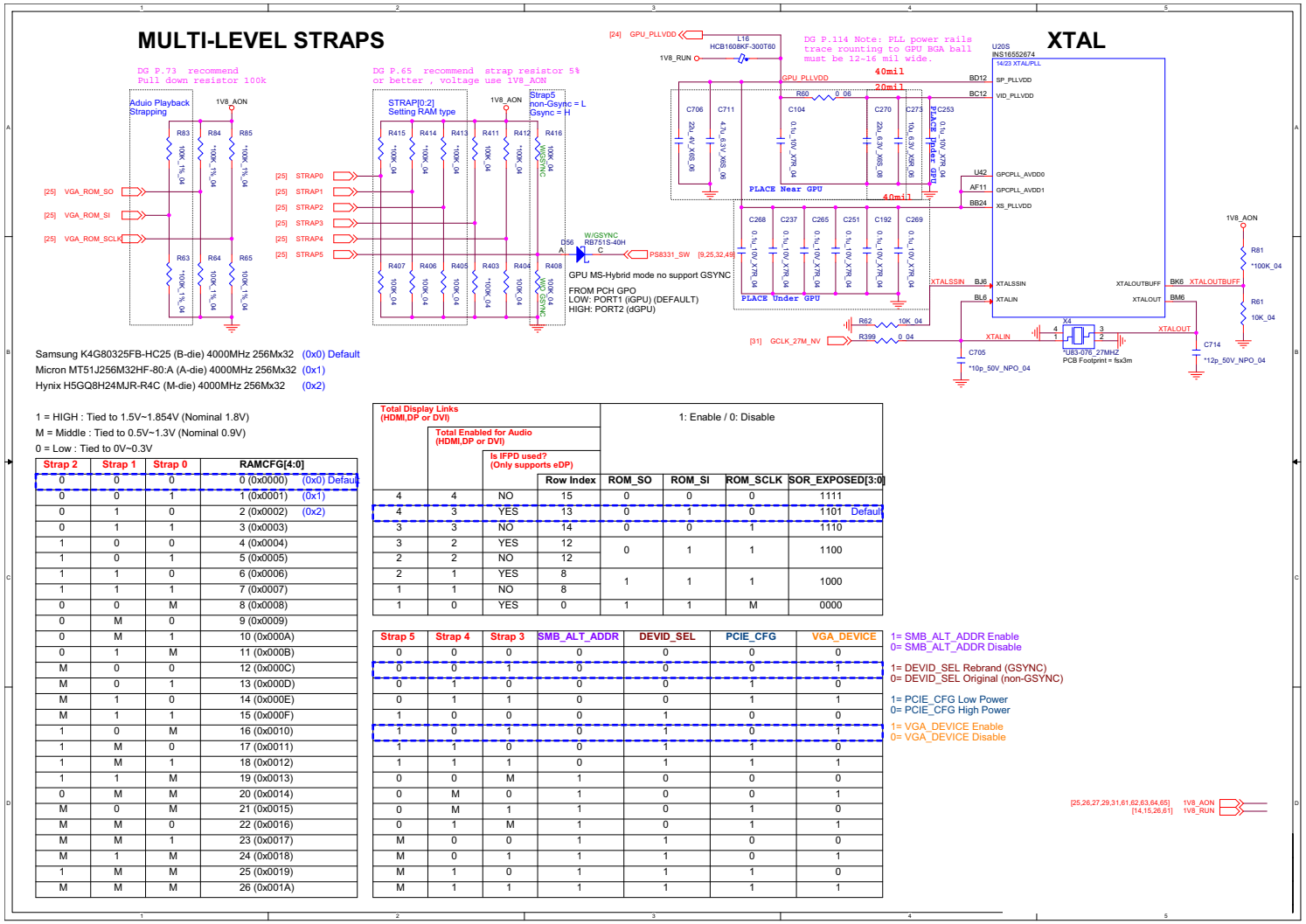

Samsung K4G80325FB-HC25 (B-die) 4000MHz 256Mx32 (0x0) Default
Micron MT51J256M32HF-80:A (A-die) 4000MHz 256Mx32 (0x1)
Hynix H5GQ8H24MJR-R4C (M-die) 4000MHz 256Mx32 (0x2)

1 = HIGH : Tied to 1.5V~1.854V (Nominal 1.8V)
M = Middle : Tied to 0.5V~1.3V (Nominal 0.9V)
0 = Low : Tied to 0V~0.3V

Strap 2	Strap 1	Strap 0	RAMCFG[4:0]
0	0	0	0 (0x0000) (0x0) Default
0	0	1	1 (0x0001) (0x1)
0	1	0	2 (0x0002) (0x2)
0	1	1	3 (0x0003)
1	0	0	4 (0x0004)
1	0	1	5 (0x0005)
1	1	0	6 (0x0006)
1	1	1	7 (0x0007)
0	0	M	8 (0x0008)
0	M	0	9 (0x0009)
0	M	1	10 (0x000A)
0	1	M	11 (0x000B)
M	0	0	12 (0x000C)
M	0	1	13 (0x000D)
M	1	0	14 (0x000E)
M	1	1	15 (0x000F)
1	0	M	16 (0x0010)
1	M	0	17 (0x0011)
1	M	1	18 (0x0012)
1	1	M	19 (0x0013)
0	M	M	20 (0x0014)
M	0	M	21 (0x0015)
M	M	0	22 (0x0016)
M	M	1	23 (0x0017)
M	1	M	24 (0x0018)
1	M	M	25 (0x0019)
M	M	M	26 (0x001A)

Total Display Links (HDMI,DP or DVI)	Total Enabled for Audio (HDMI,DP or DVI)	Is IFPD used? (Only supports eDP)	Row Index	ROM_SO	ROM_SI	ROM_SCLK	SOR_EXPOSED[3:0]
				1: Enable / 0: Disable			
4	4	NO	15	0	0	0	1111
4	3	YES	13	0	1	0	1101 Default
3	3	NO	14	0	0	1	1110
3	2	YES	12	0	1	1	1100
2	2	NO	12				
2	1	YES	8	1	1	1	1000
1	1	NO	8				
1	0	YES	0	1	1	M	0000

Strap 5	Strap 4	Strap 3	SMB_ALT_ADDR	DEVID_SEL	PCIE_CFG	VGA_DEVICE
0	0	0	0	0	0	0
0	0	1	0	0	0	1
0	1	0	0	0	1	0
0	1	1	0	0	1	1
1	0	0	0	1	0	0
1	0	1	0	1	0	1
1	1	0	0	1	1	0
1	1	1	0	1	1	1
0	0	M	1	0	0	0
0	M	0	1	0	0	1
0	M	1	1	0	1	0
0	1	M	1	0	1	1
M	0	0	1	1	0	0
M	0	1	1	1	0	1
M	1	0	1	1	1	0
M	1	1	1	1	1	1

1= SMB_ALT_ADDR Enable
0= SMB_ALT_ADDR Disable

1= DEVID_SEL Rebrand (GSYNC)
0= DEVID_SEL Original (non-GSYNC)

1= PCIE_CFG Low Power
0= PCIE_CFG High Power

1= VGA_DEVICE Enable
0= VGA_DEVICE Disable

IFP I/O Interface

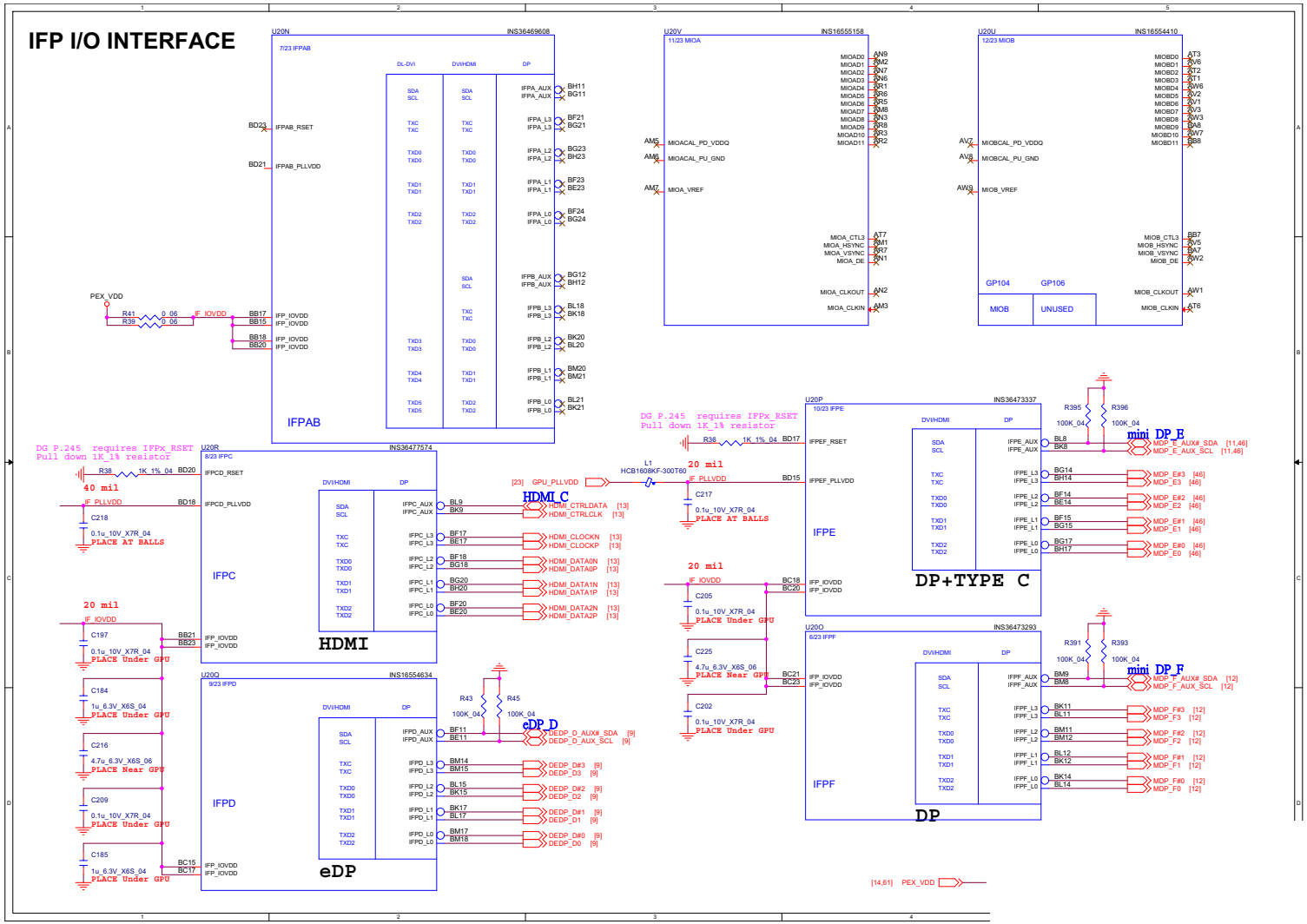

Sheet 24 of 77
IFP I/O Interface

Misc - GPIO, I2C and ROM

Sheet 25 of 77
Misc - GPIO, I2C and ROM

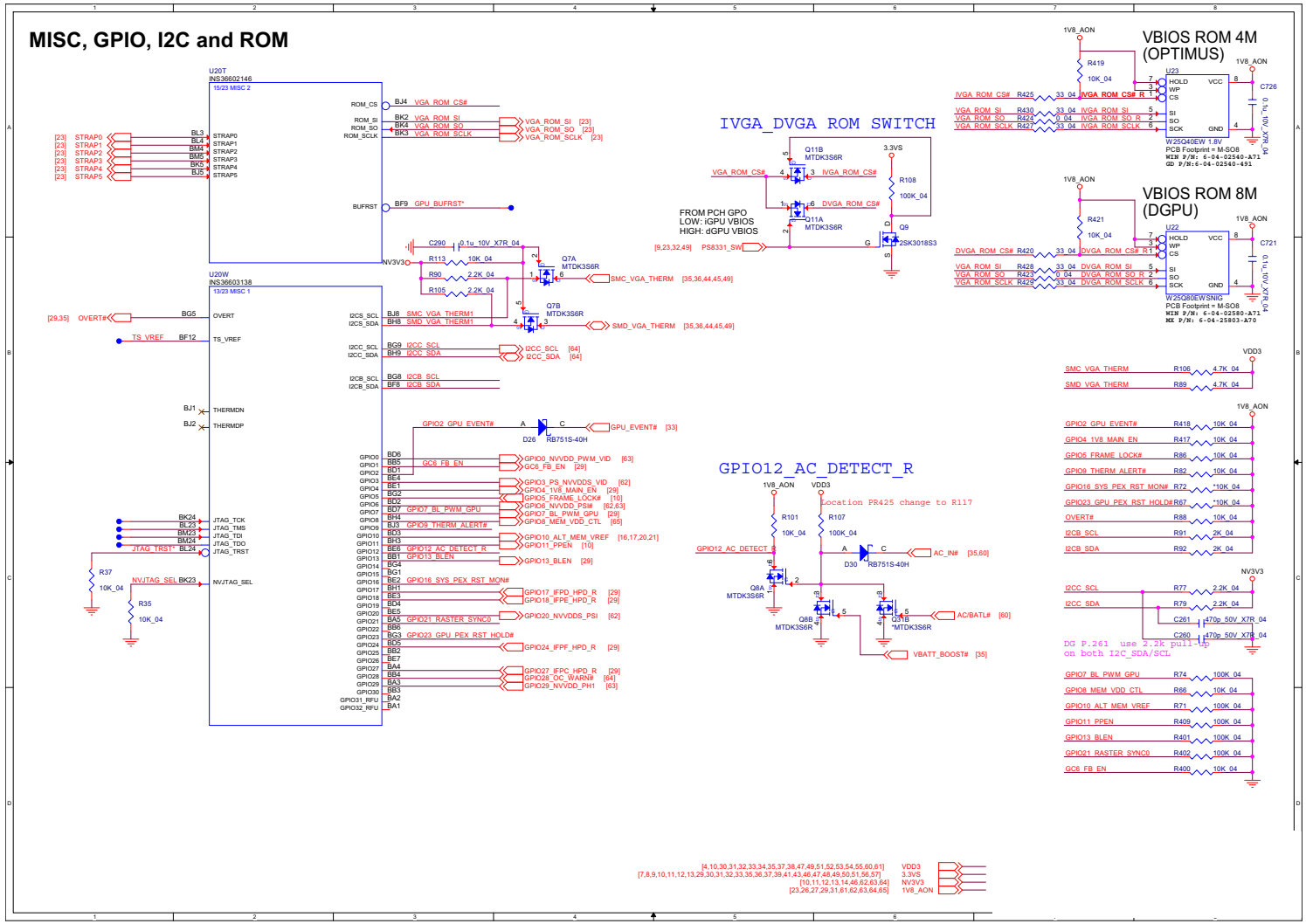

VDD

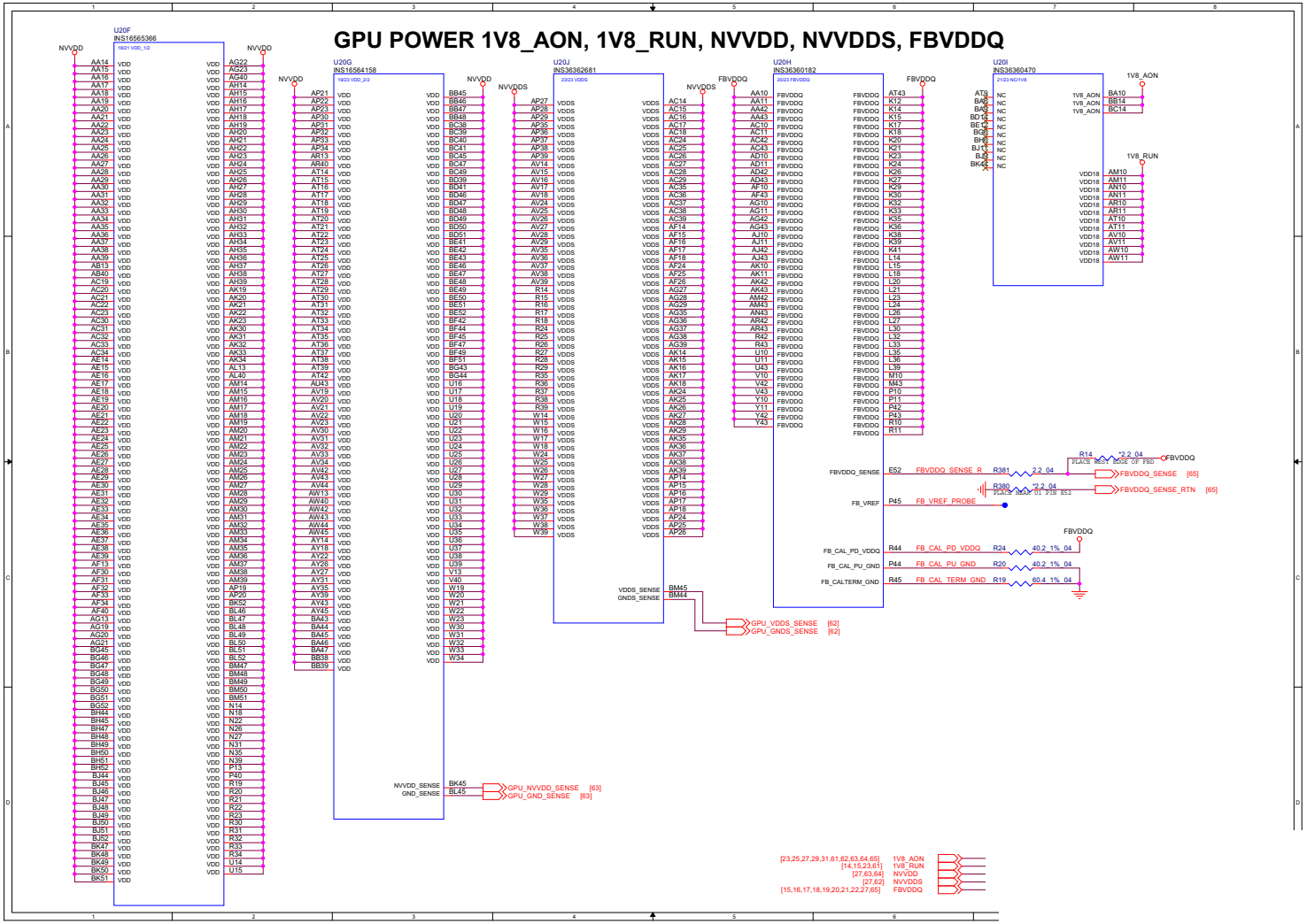

Sheet 26 of 77
VDD

Decoupling

Sheet 27 of 77
Decoupling

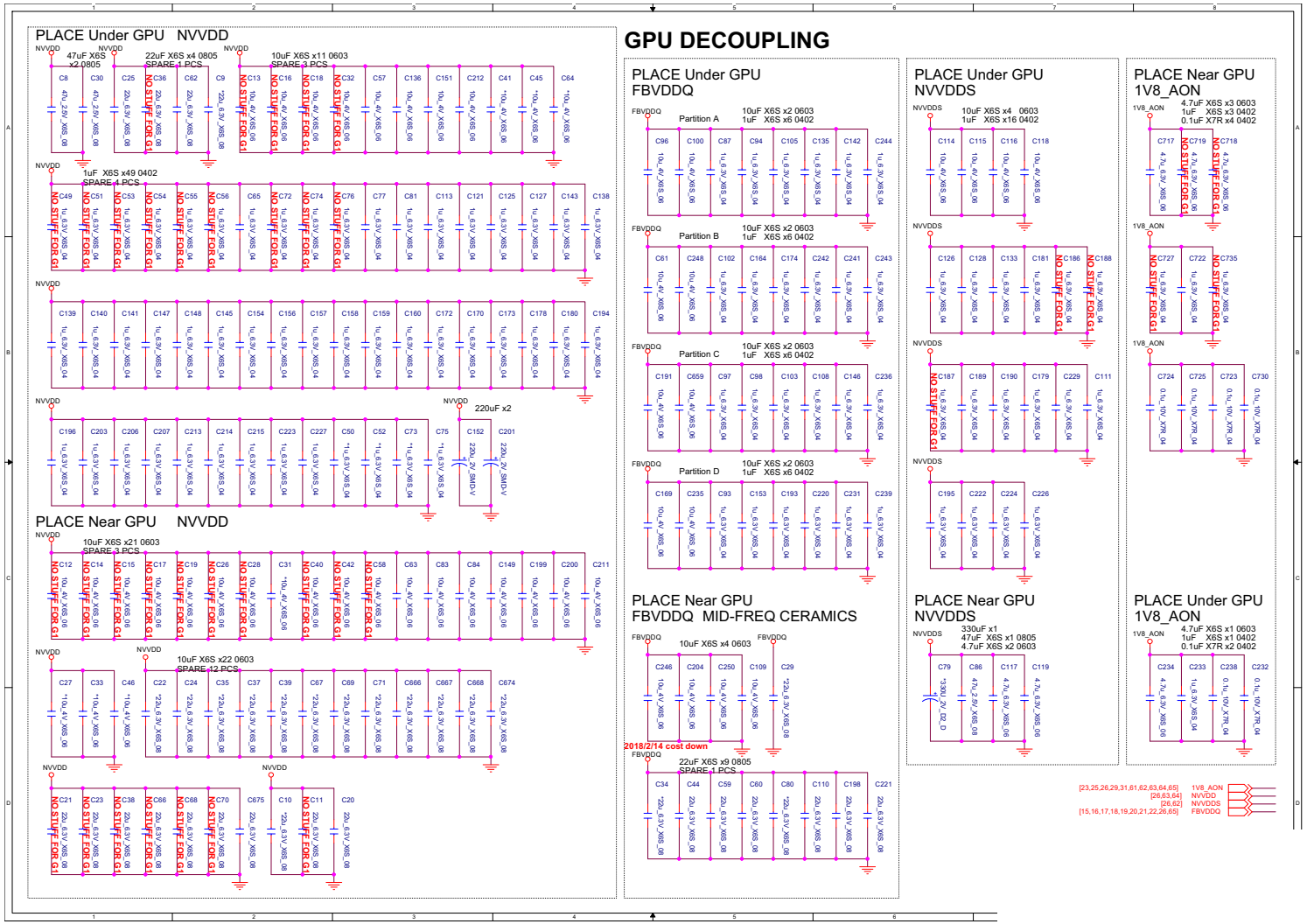

GPU GND

Sheet 28 of 77
GPU GND

GPU PWR CTRL, Level Shift

Sheet 29 of 77
GPU PWR CTRL, Level Shift

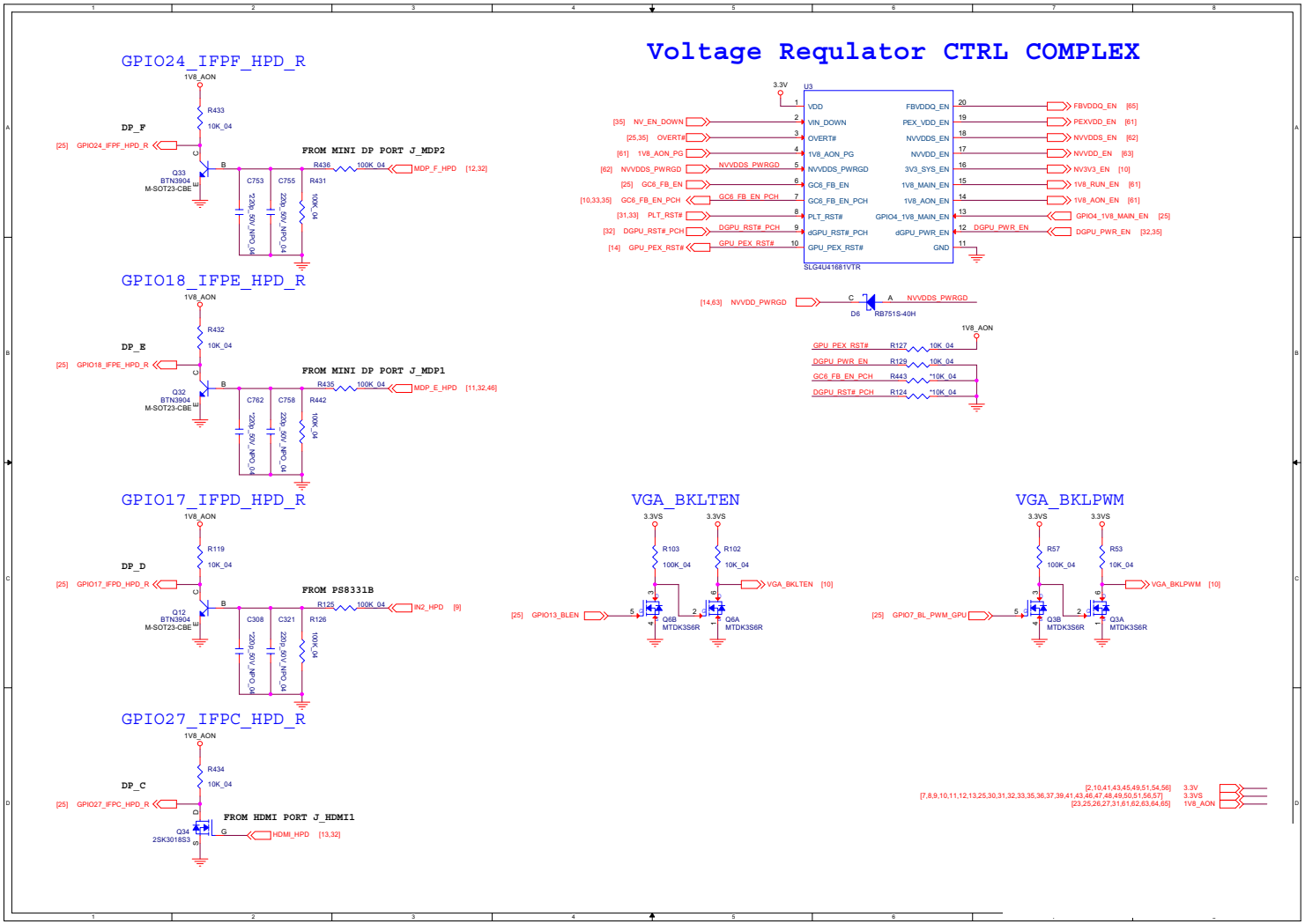

PCH 1/5

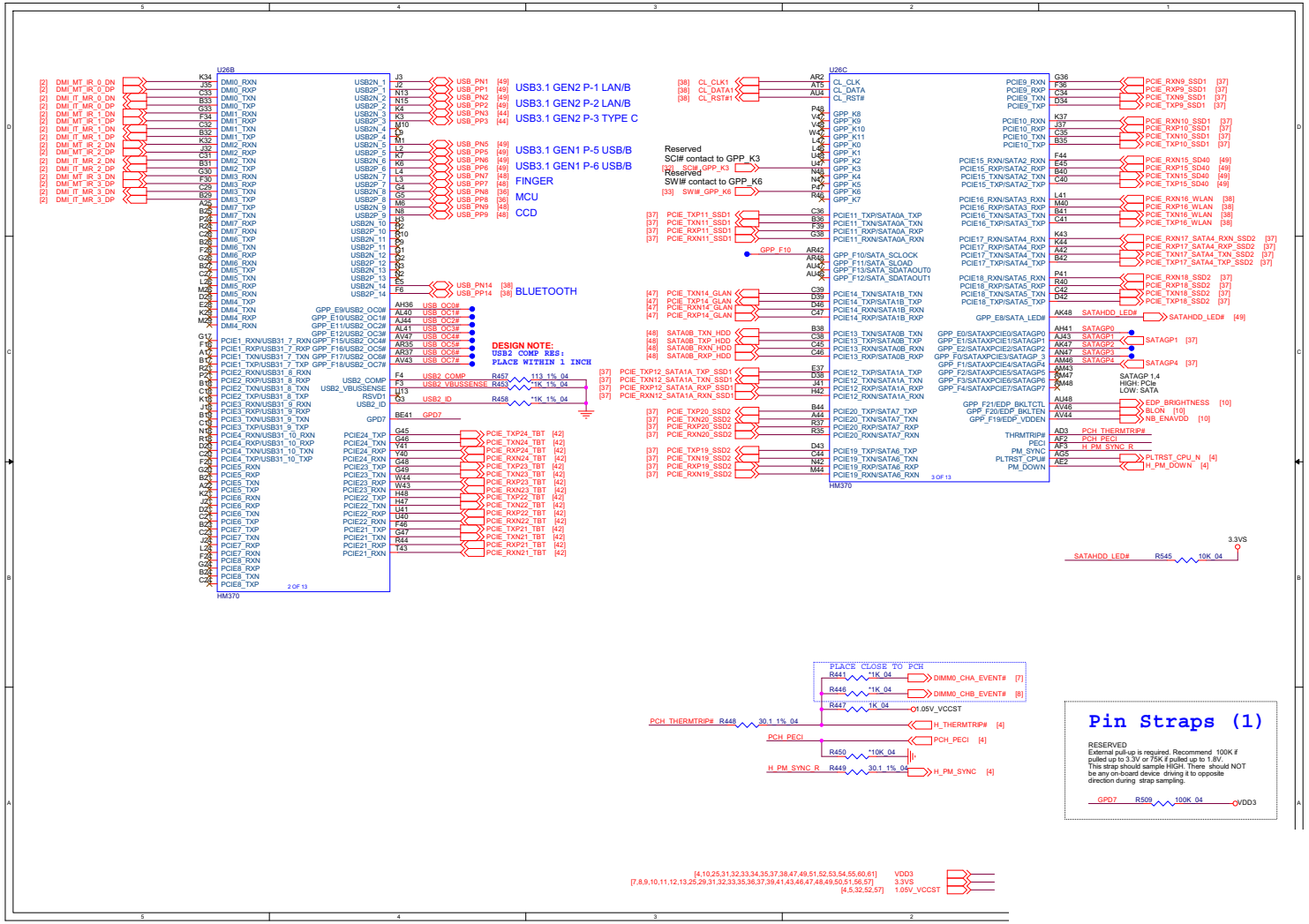

Sheet 30 of 77
PCH 1/5

PCH 2/5

Sheet 31 of 77
PCH 2/5

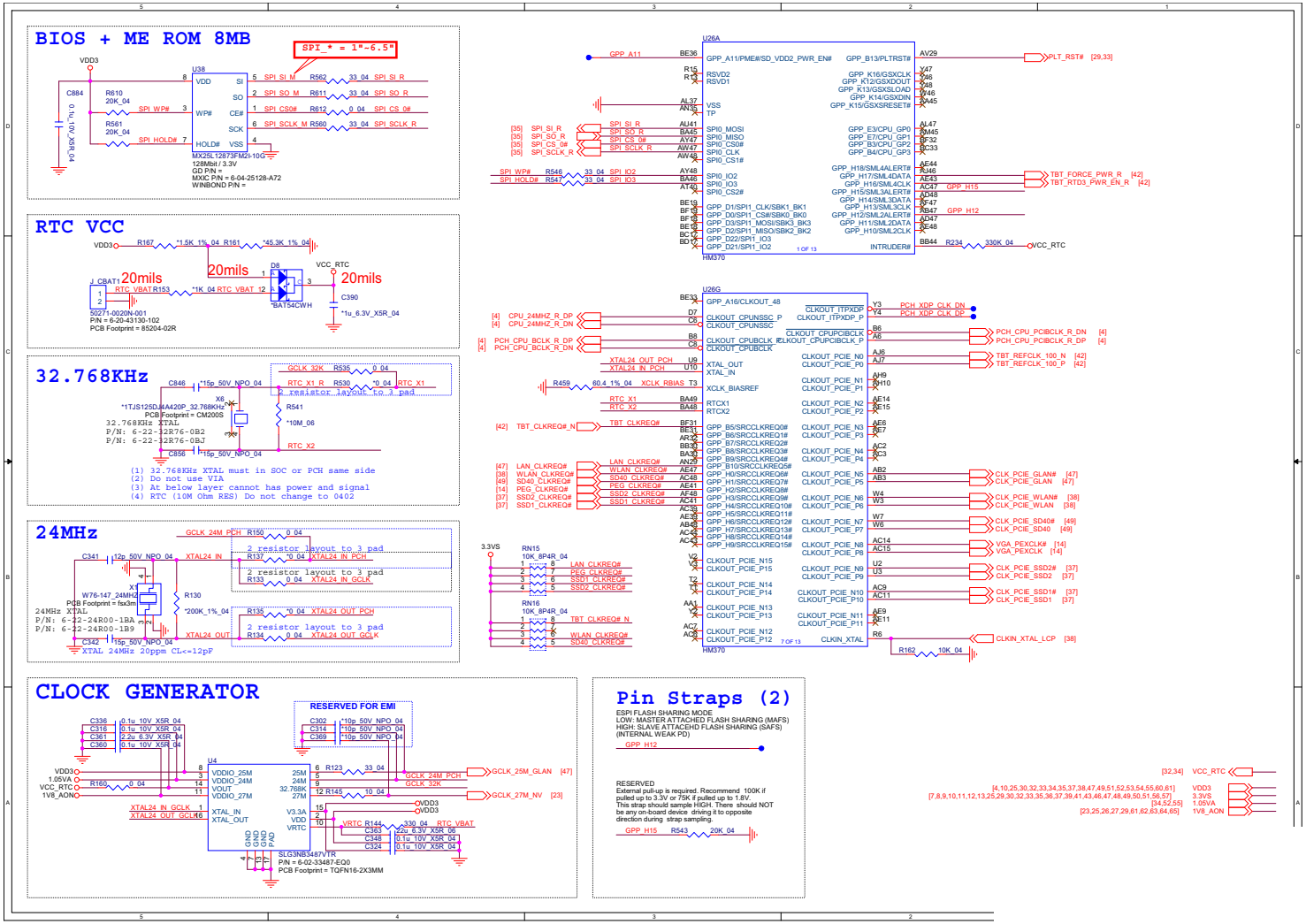

PCH 3/5

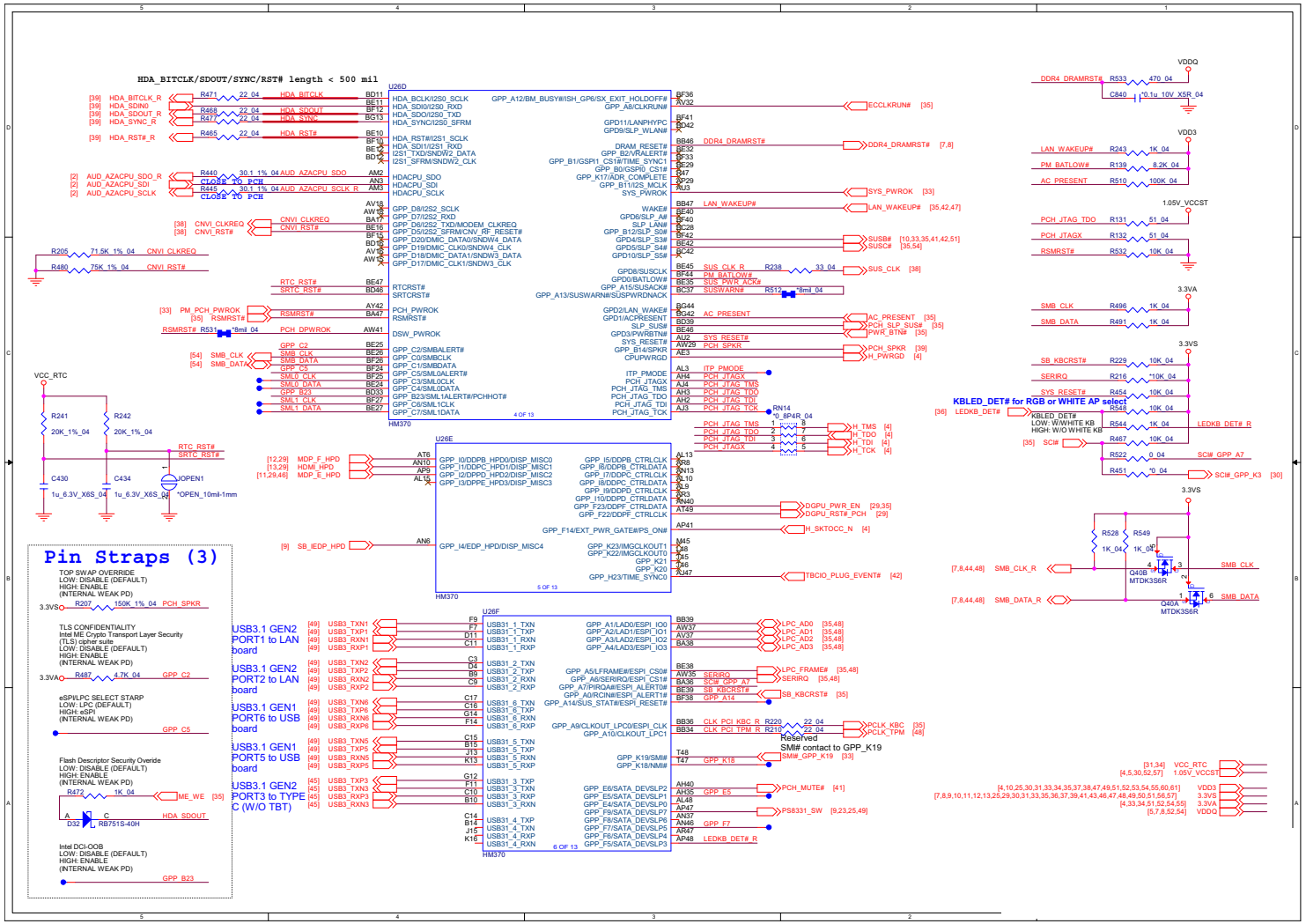

Sheet 32 of 77
PCH 3/5

PCH 4/5

Sheet 33 of 77
PCH 4/5

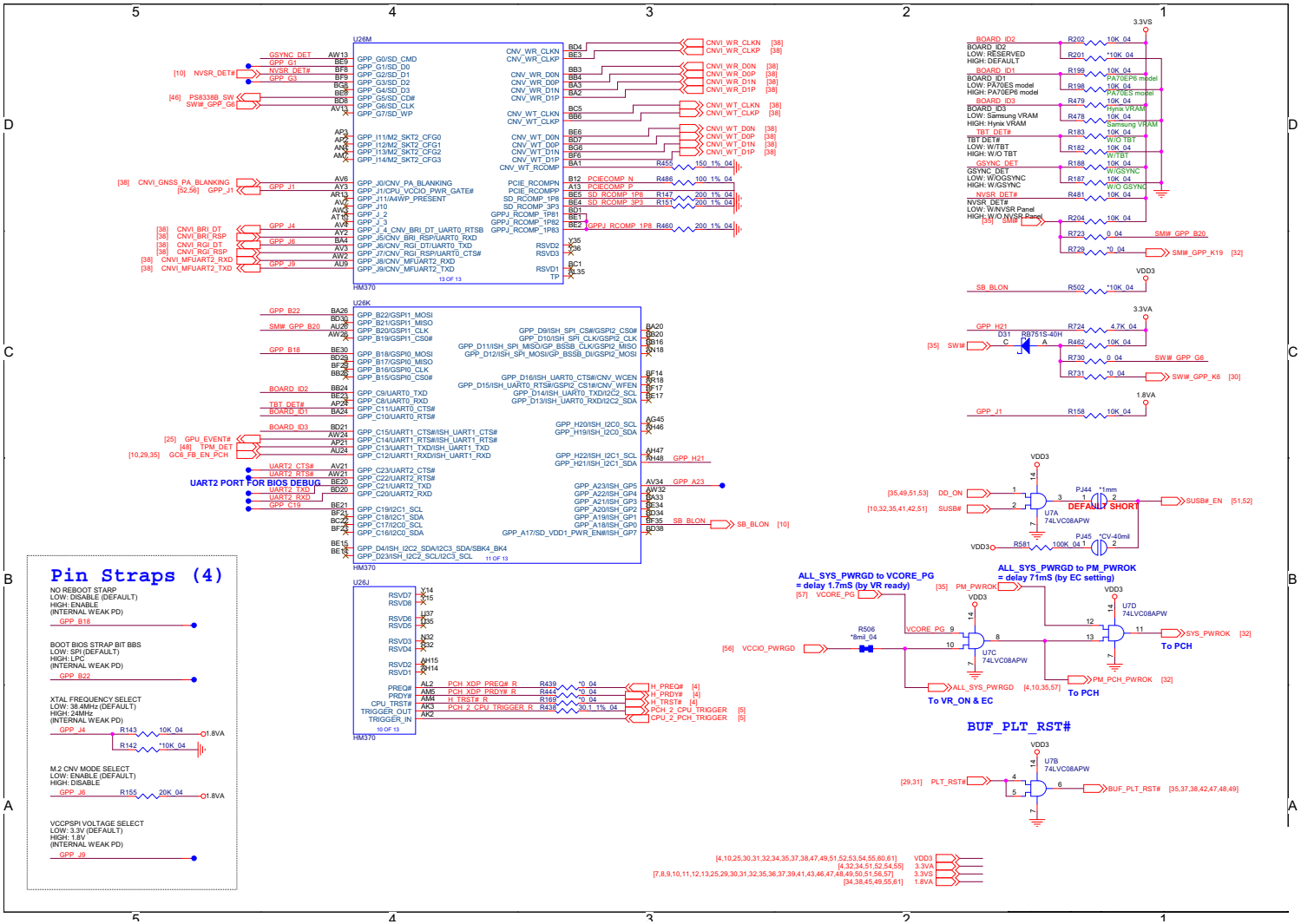

PCH 5/5

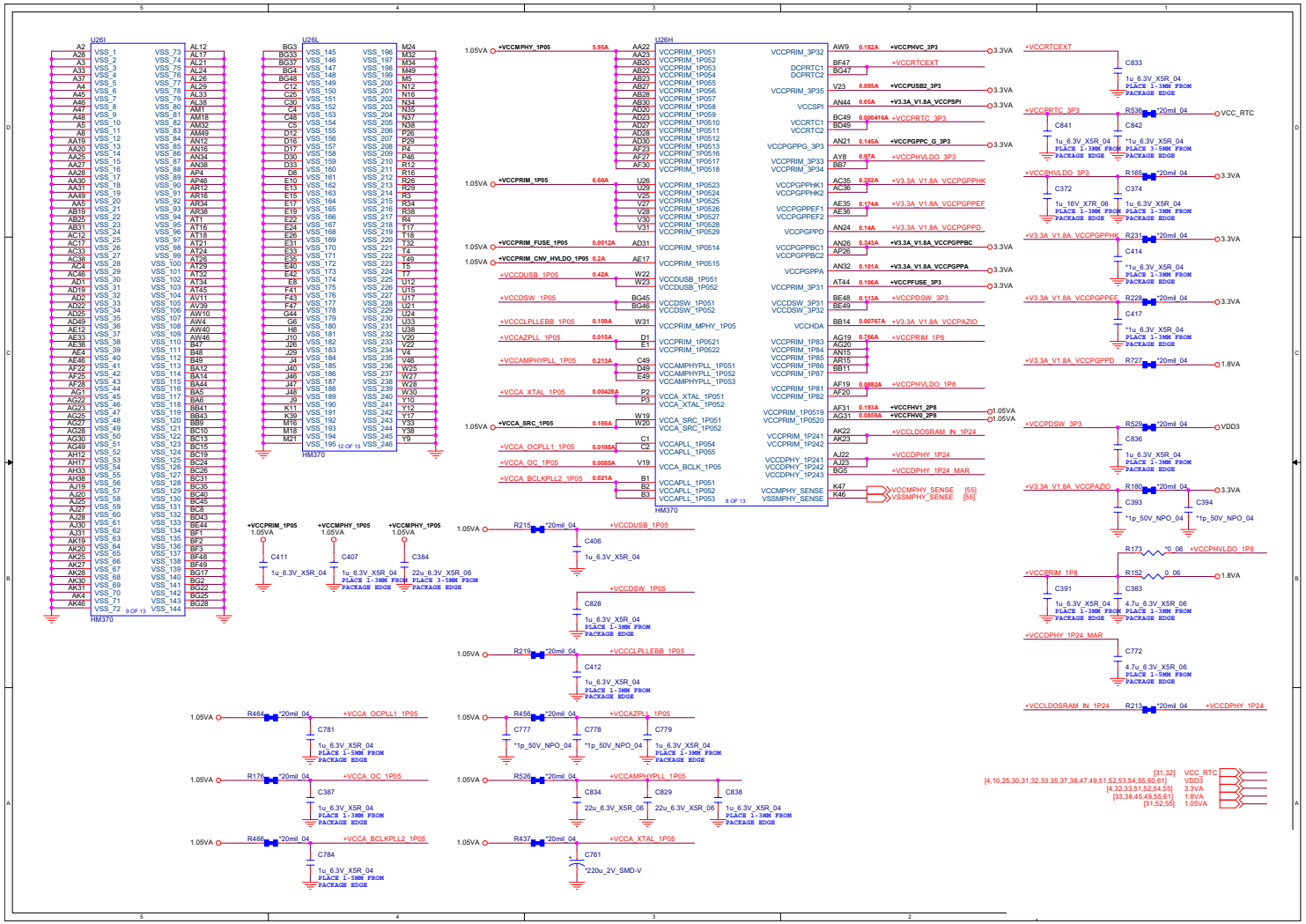

Sheet 34 of 77
PCH 5/5

KBC IT8587

Sheet 35 of 77
KBC IT8587

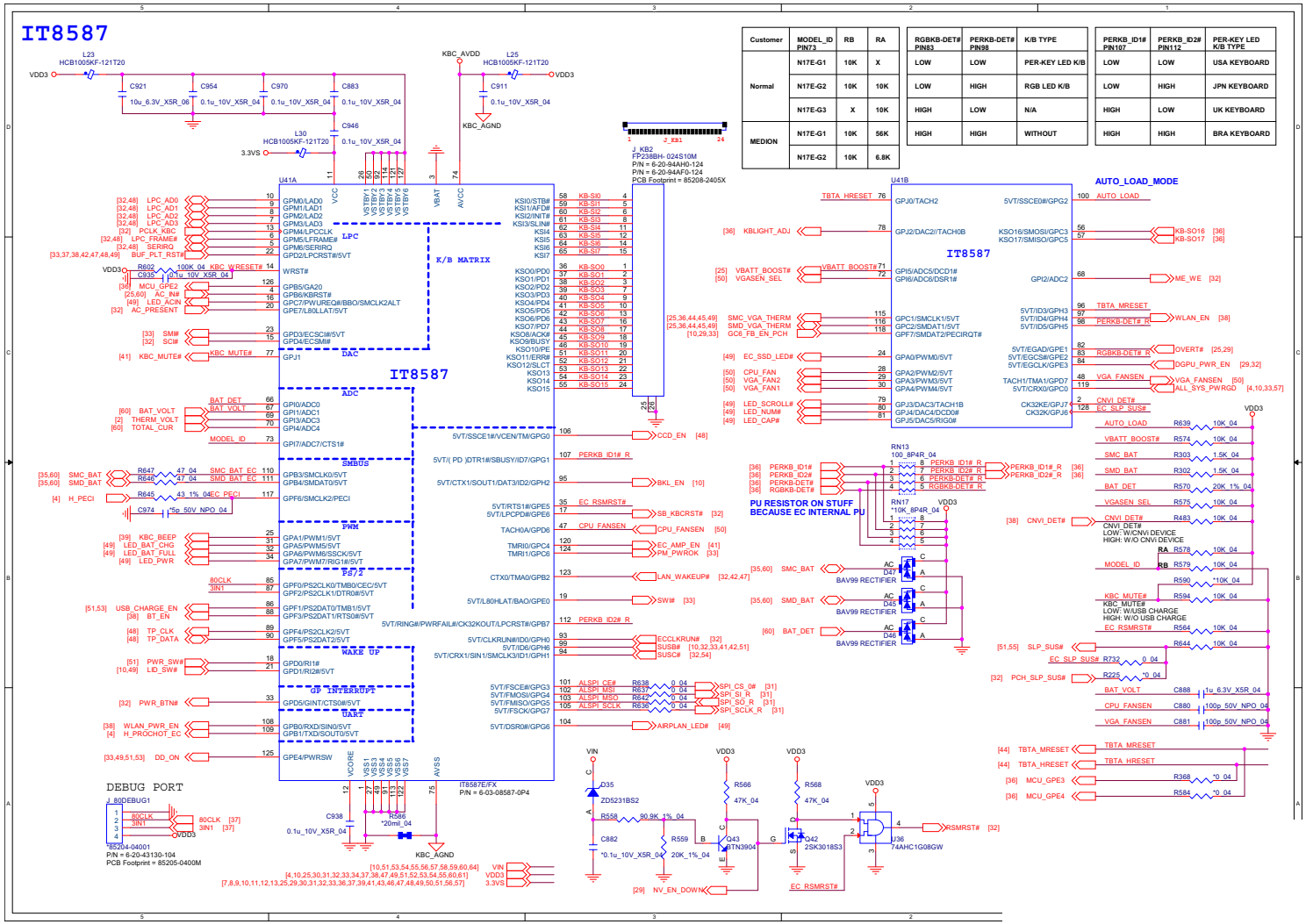

Customer	MODEL_ID PIN73	RB	RA
Normal	N17E-G1	10K	X
	N17E-G2	10K	10K
	N17E-G3	X	10K
MEDION	N17E-G1	10K	56K
	N17E-G2	10K	6.8K

RGBKB-DET# PIN83	PERKB-DET# PIN98	K/B TYPE
LOW	LOW	PER-KEY LED K/B
LOW	HIGH	RGB LED K/B
HIGH	LOW	N/A
HIGH	HIGH	WITHOUT

PERKB_ID1# PIN107	PERKB_ID2# PIN112	PER-KEY LED K/B TYPE
LOW	LOW	USA KEYBOARD
LOW	HIGH	JPN KEYBOARD
HIGH	LOW	UK KEYBOARD
HIGH	HIGH	BRA KEYBOARD

RGB and White KB LED

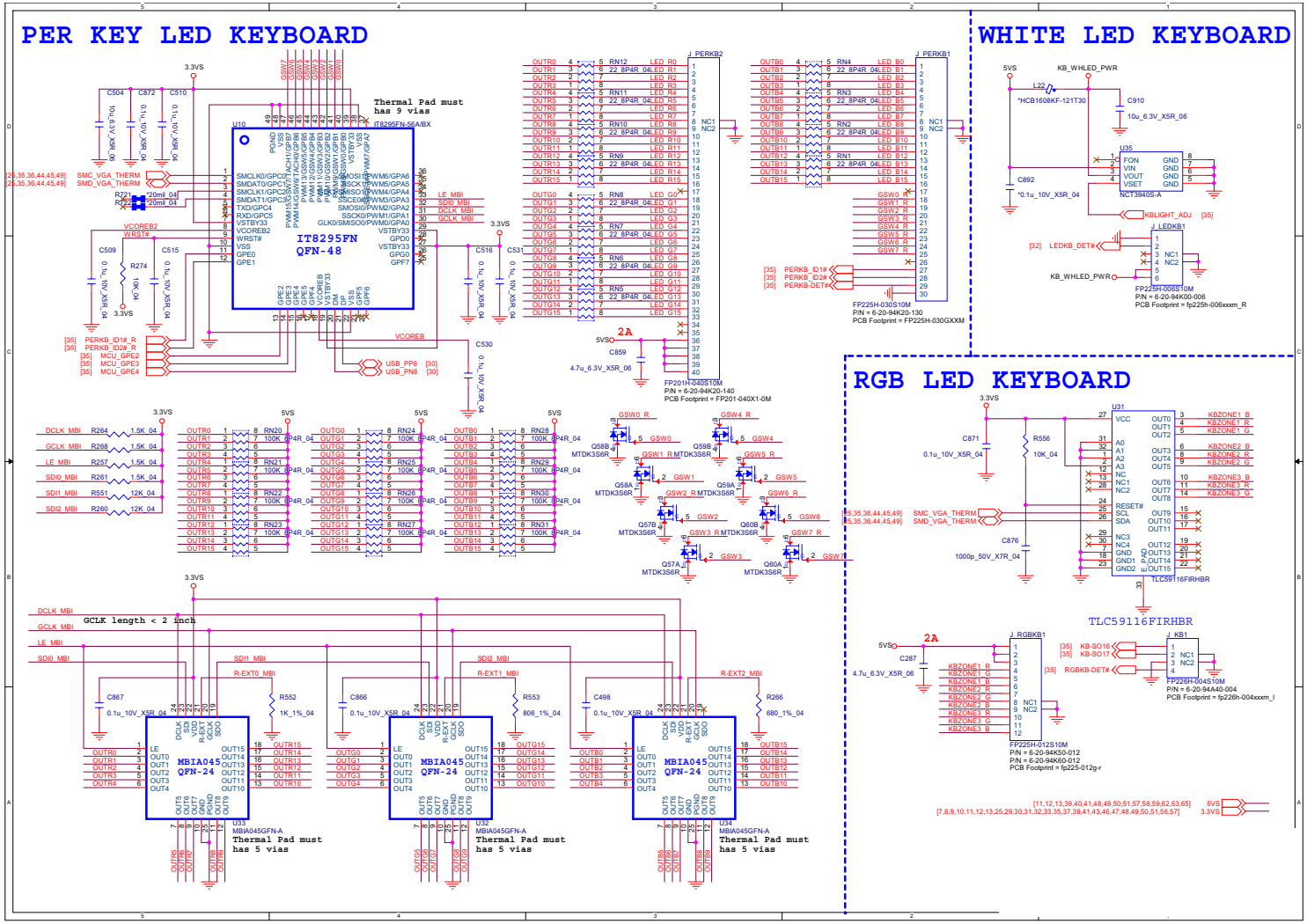

Sheet 36 of 77
RGB and White KB LED

M.2 SSD

Sheet 37 of 77
M.2 SSD

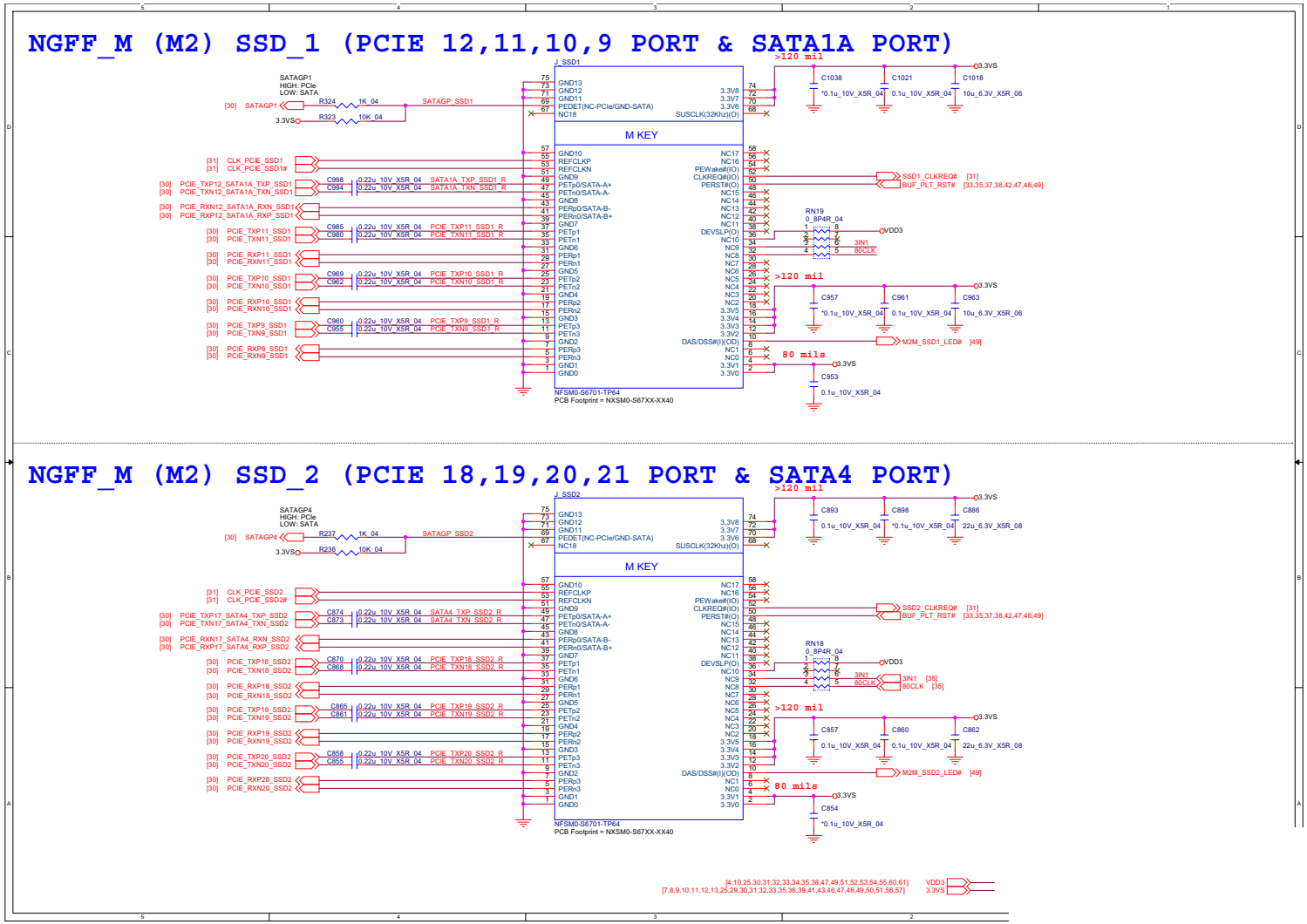

M.2 WLAN+BT

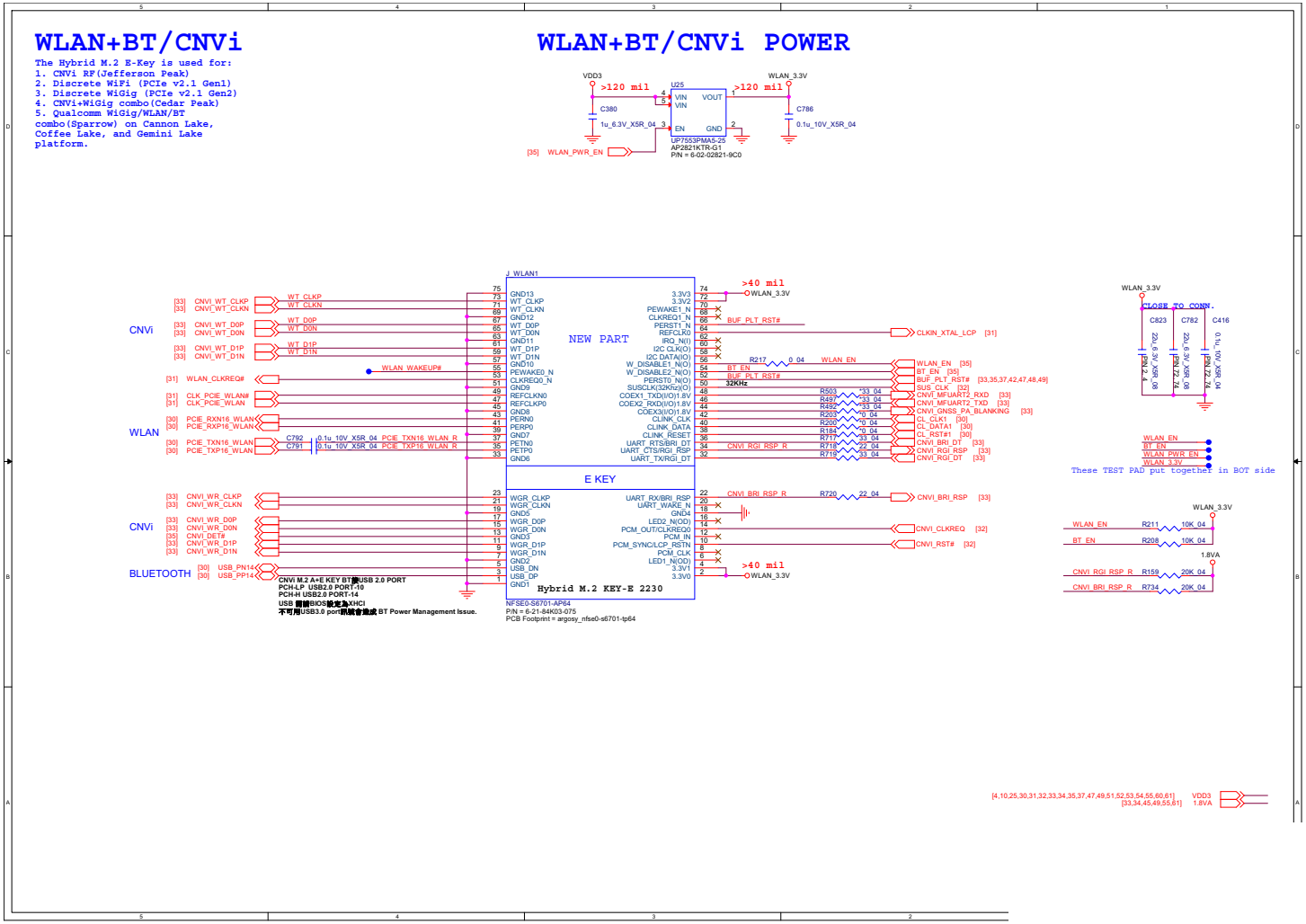

Sheet 38 of 77
M.2 WLAN+BT

Audio Codec ALC892

Sheet 39 of 77
Audio Codec
ALC892

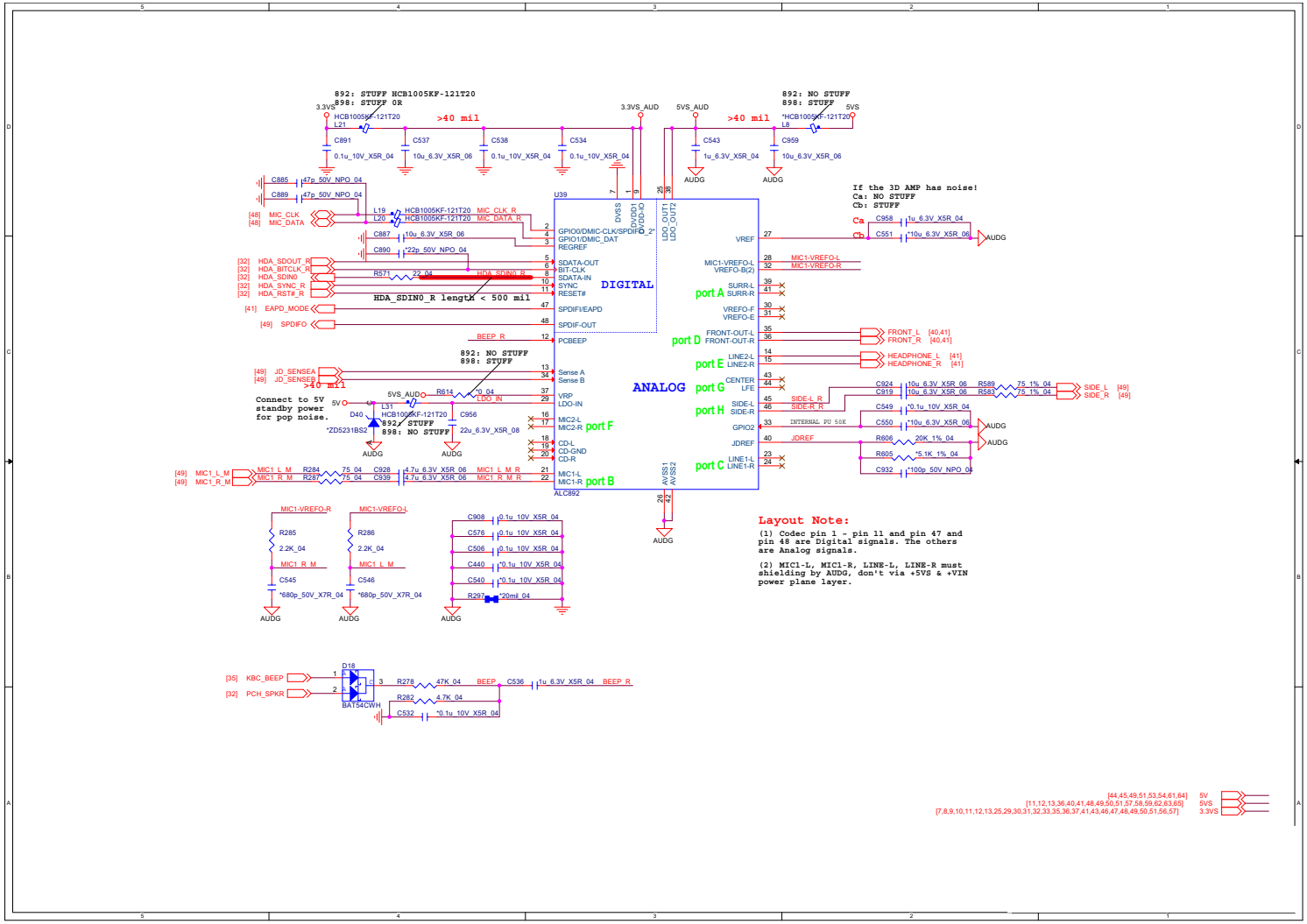

Audio Subwoofer

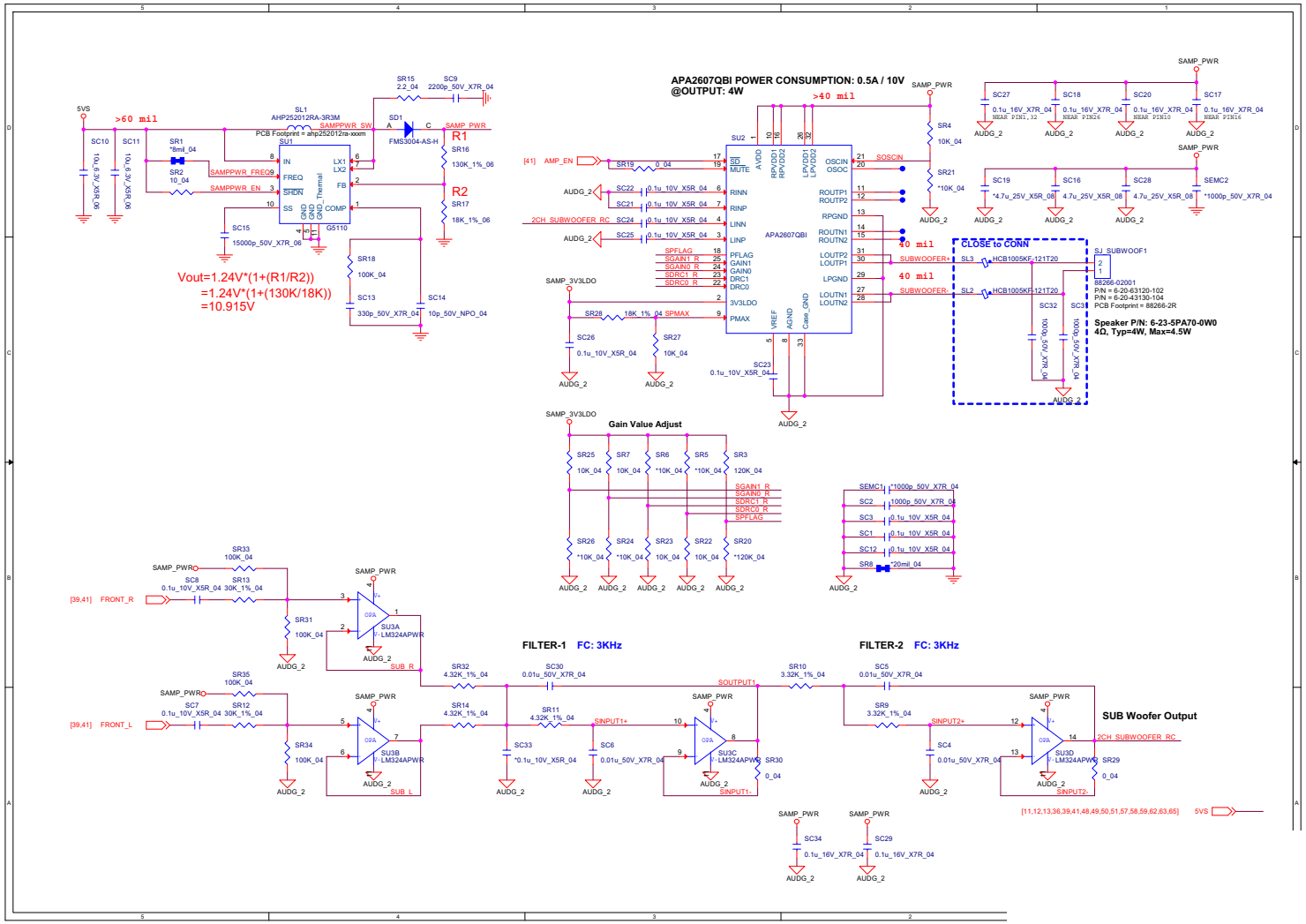

Sheet 40 of 77
Audio Subwoofer

Audio Amplifier

Sheet 41 of 77
Audio Amplifier

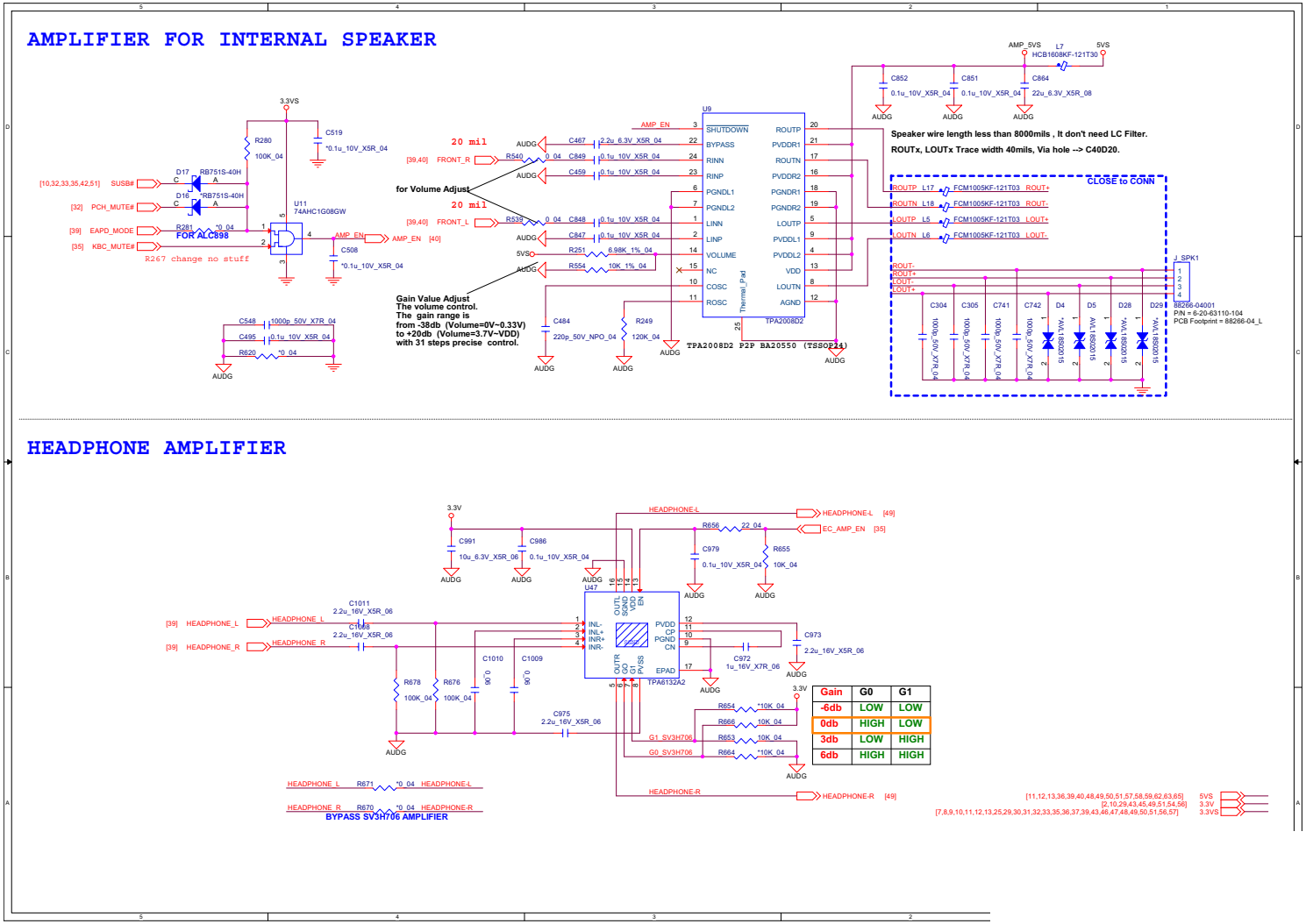

AR_TBT

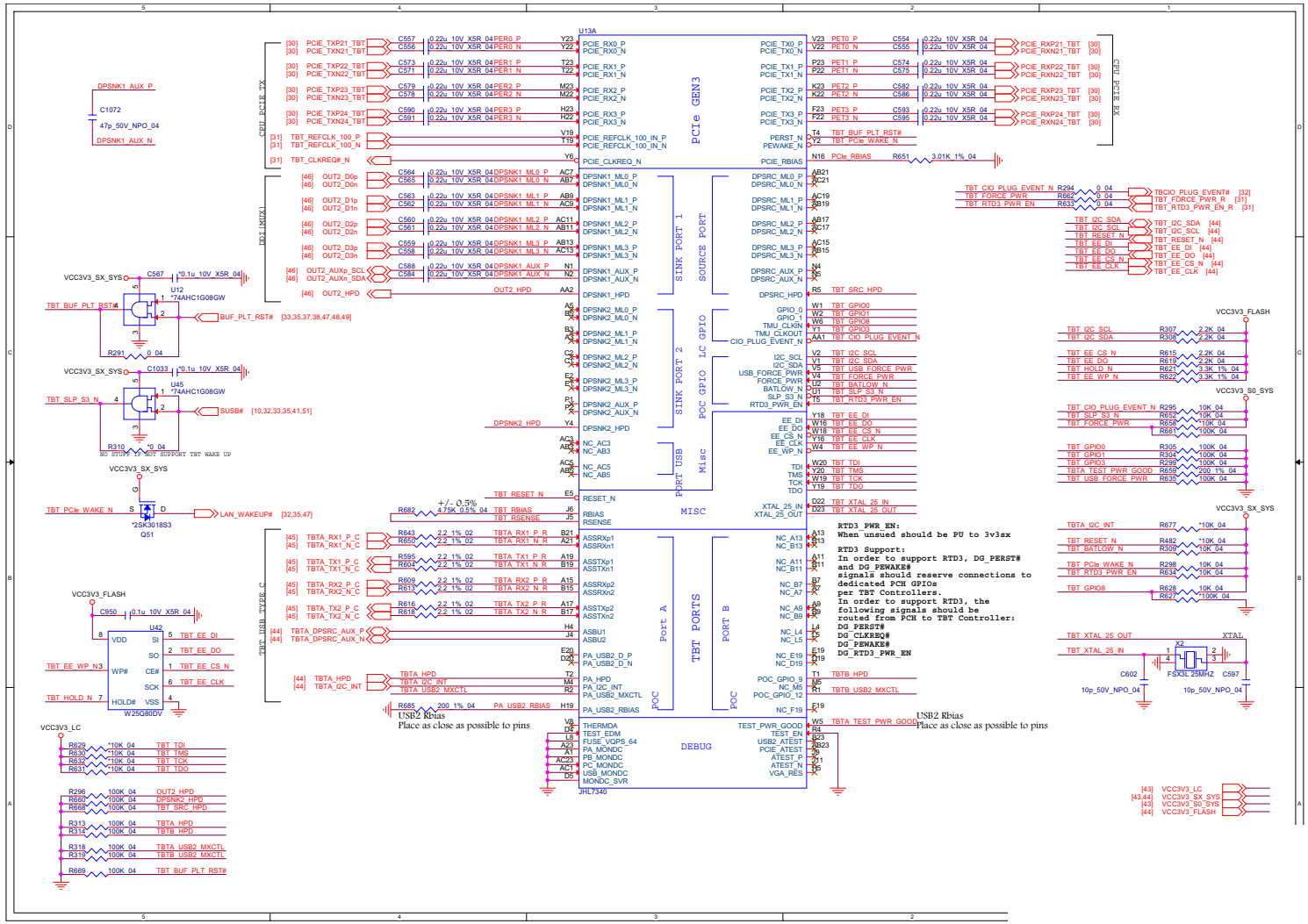

Sheet 42 of 77
AR_TBT

AR Power

Sheet 43 of 77
AR Power

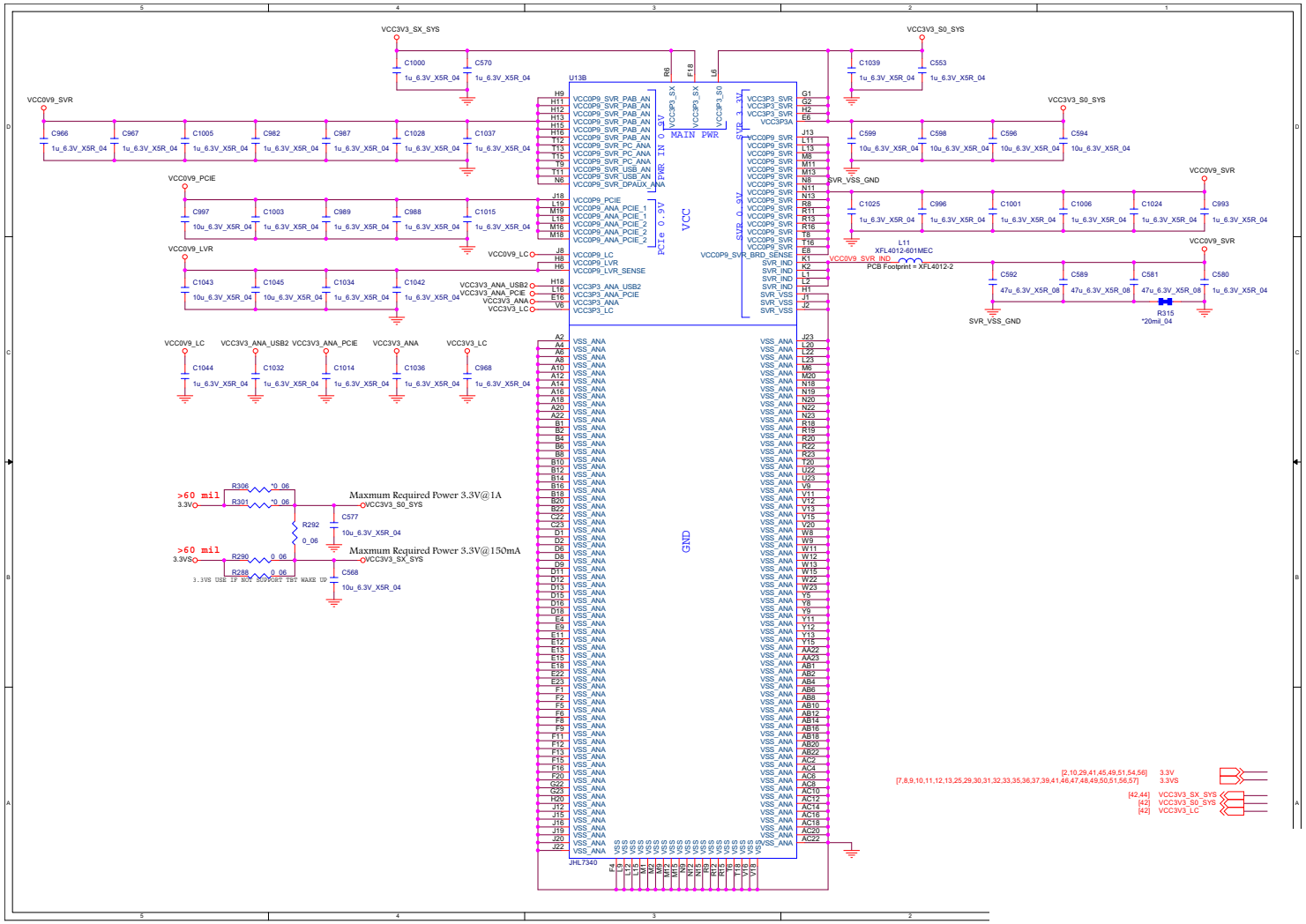

TPS65982ABZQZ

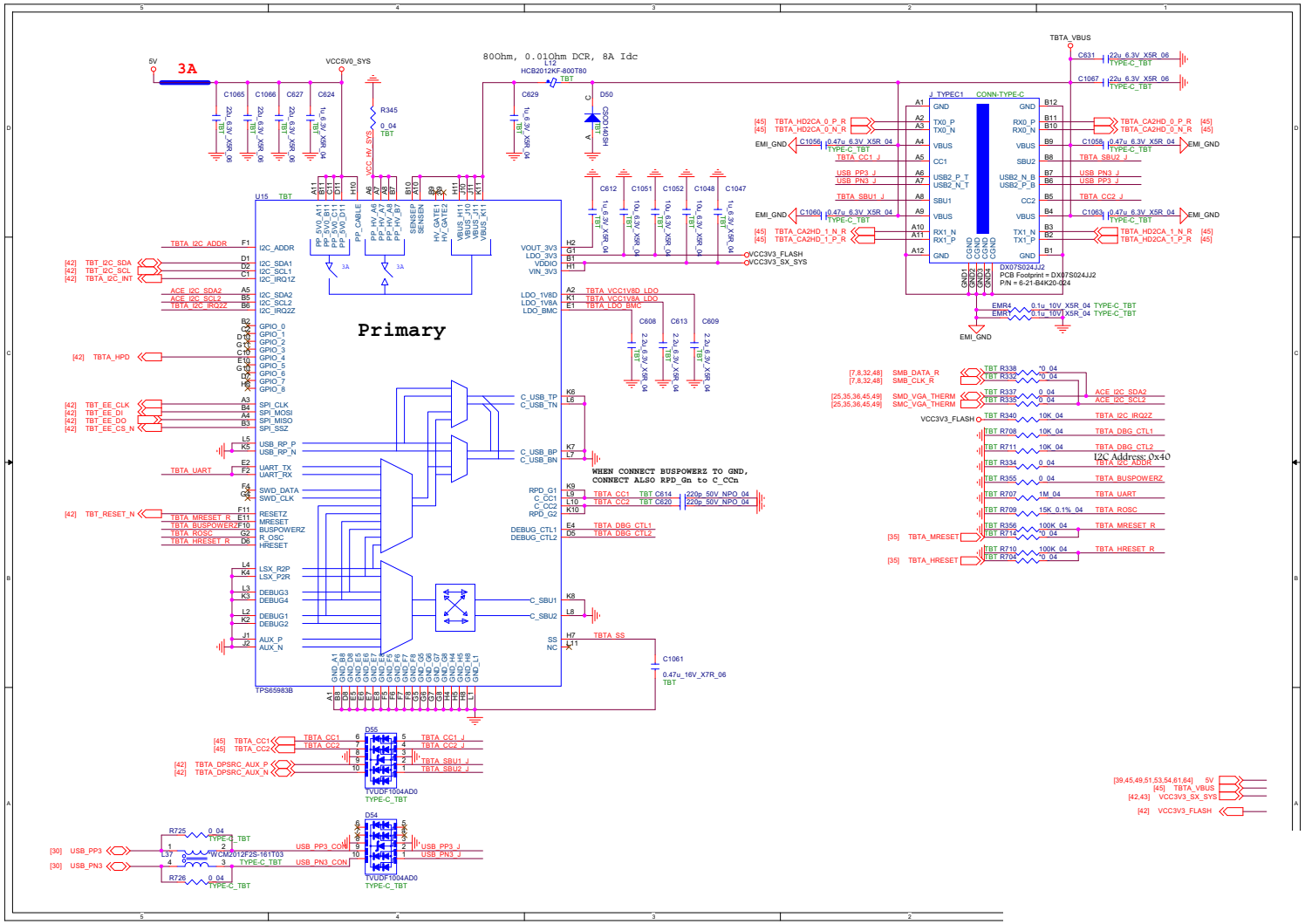

Sheet 44 of 77
TPS65982ABZQZ

ASM1543 Type-C

Sheet 45 of 77
ASM1543 Type-C

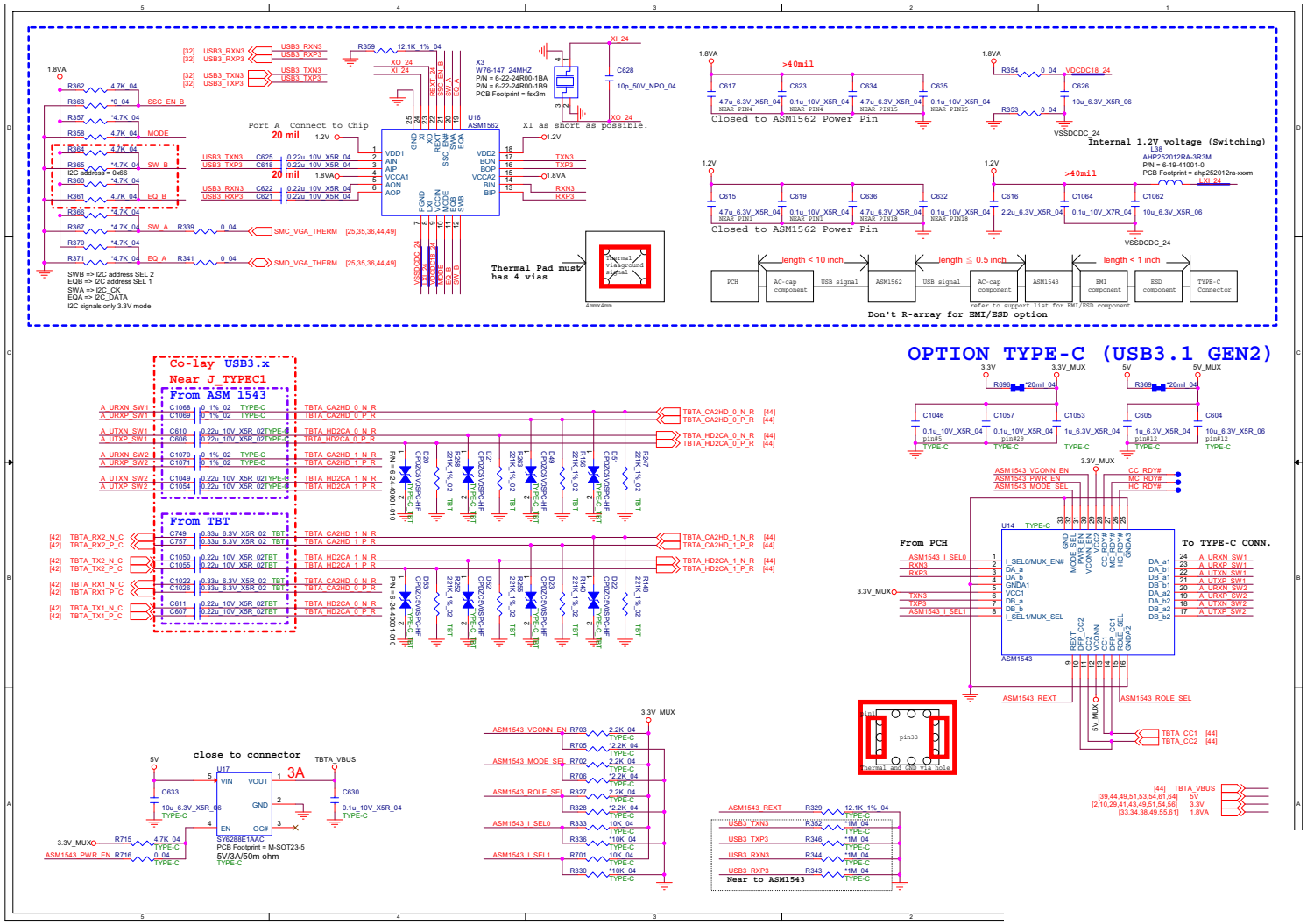

PS8338B

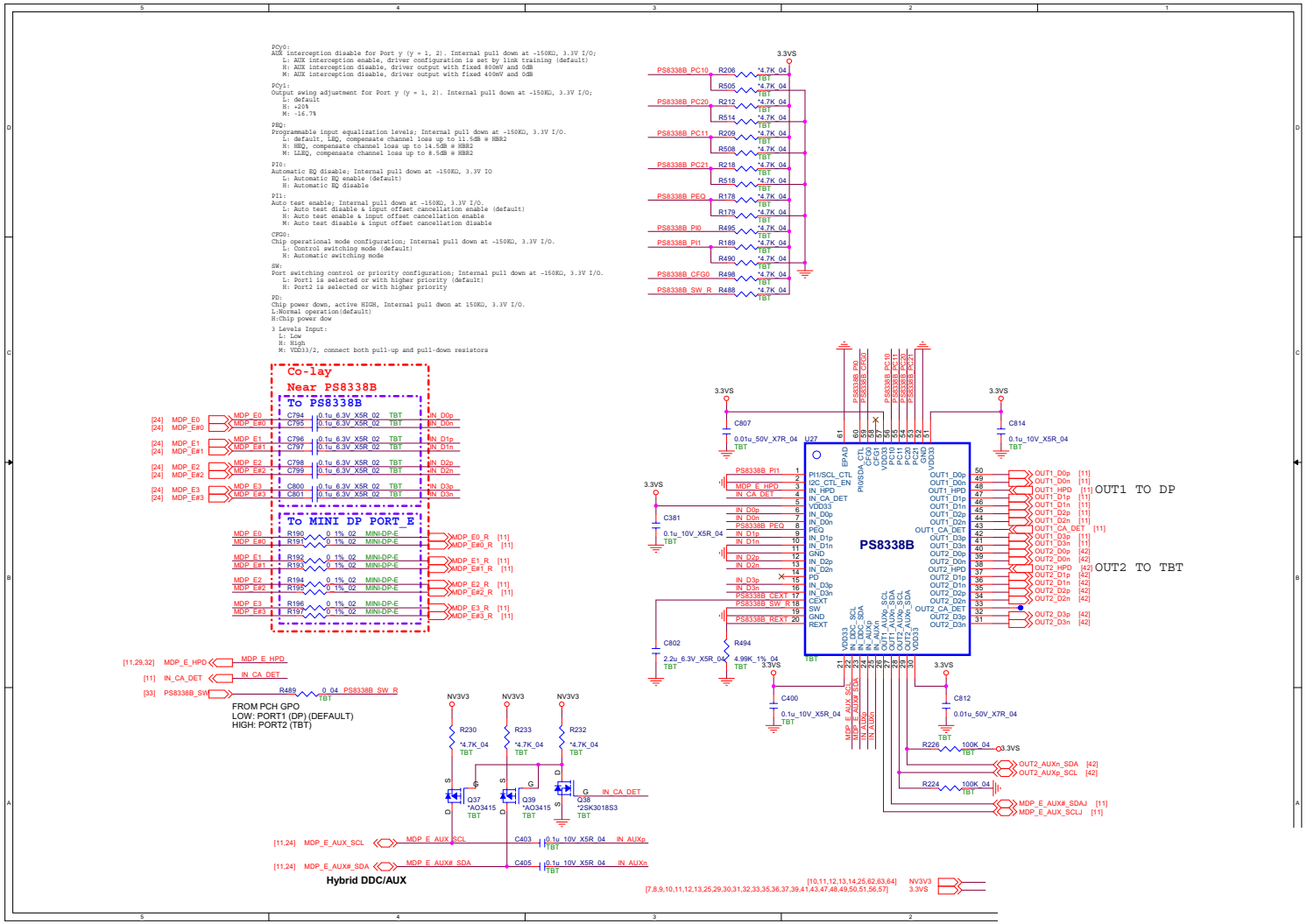

Sheet 46 of 77
PS8338B

LAN RTL8111G

Sheet 47 of 77
LAN RTL8111G

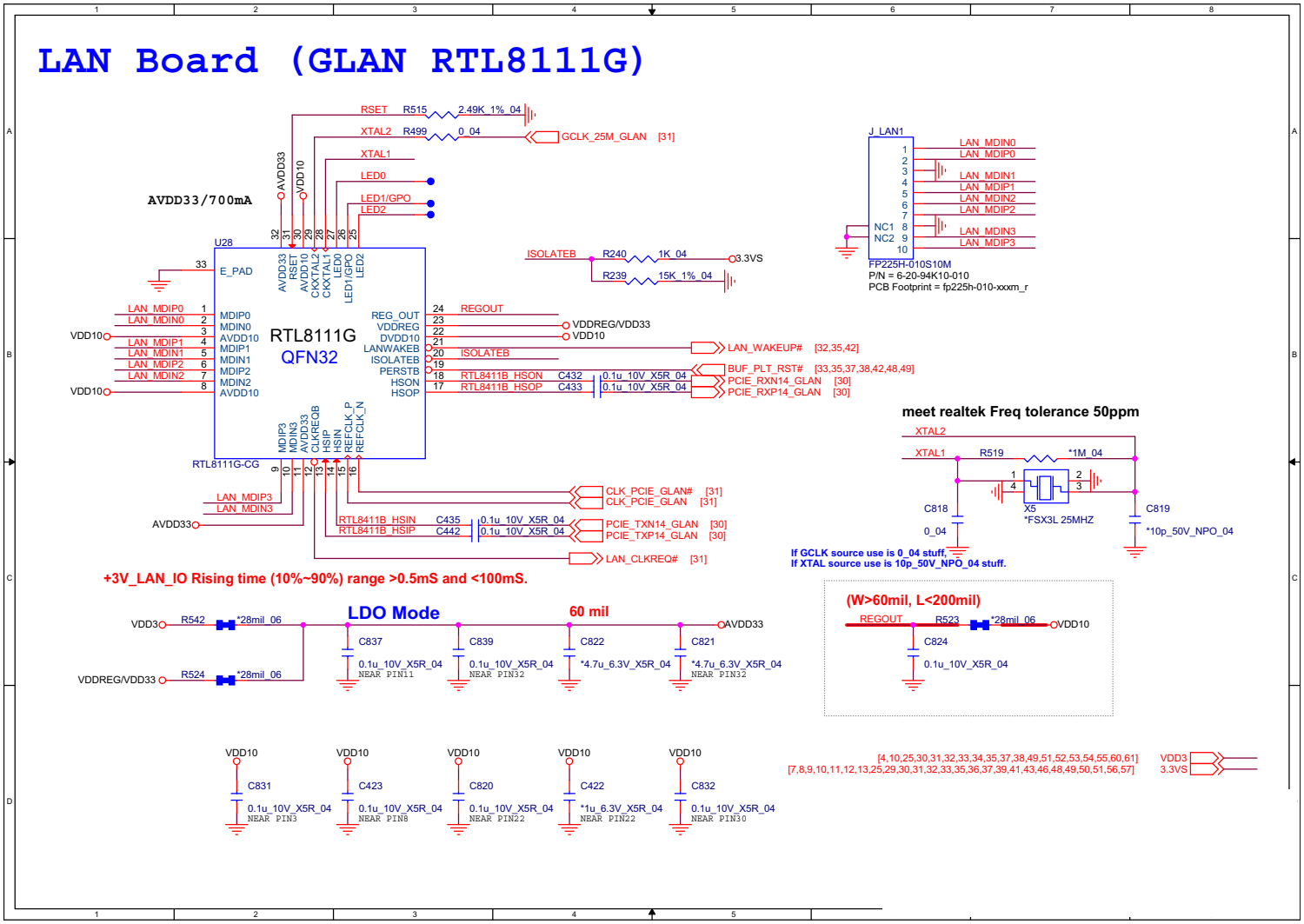

Conn_CCD, TP, FP, HDD, TPM

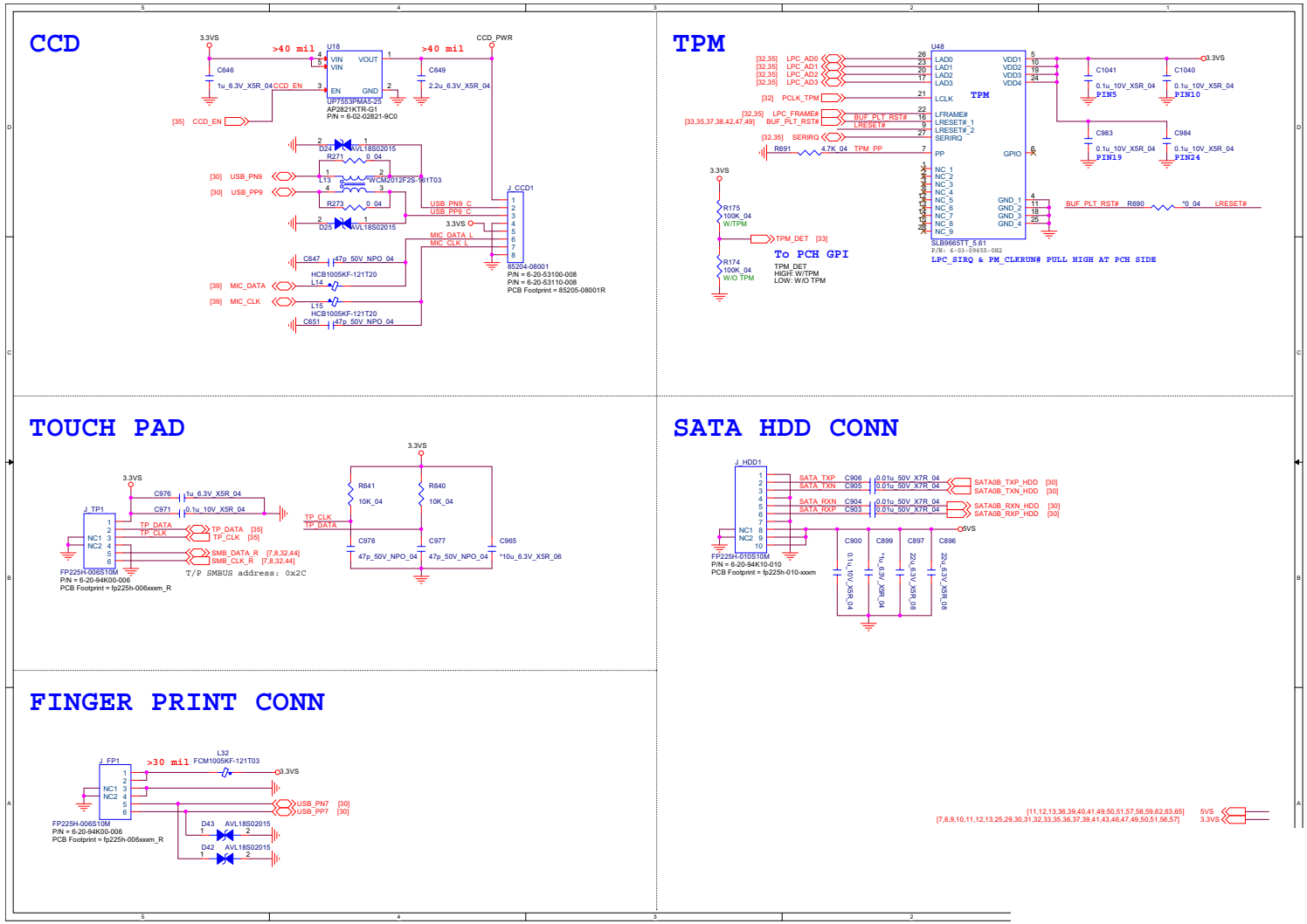

Sheet 48 of 77
Conn_CCD, TP, FP, HDD, TPM

Conn to Extend Board

Sheet 49 of 77
Conn to Extend Board

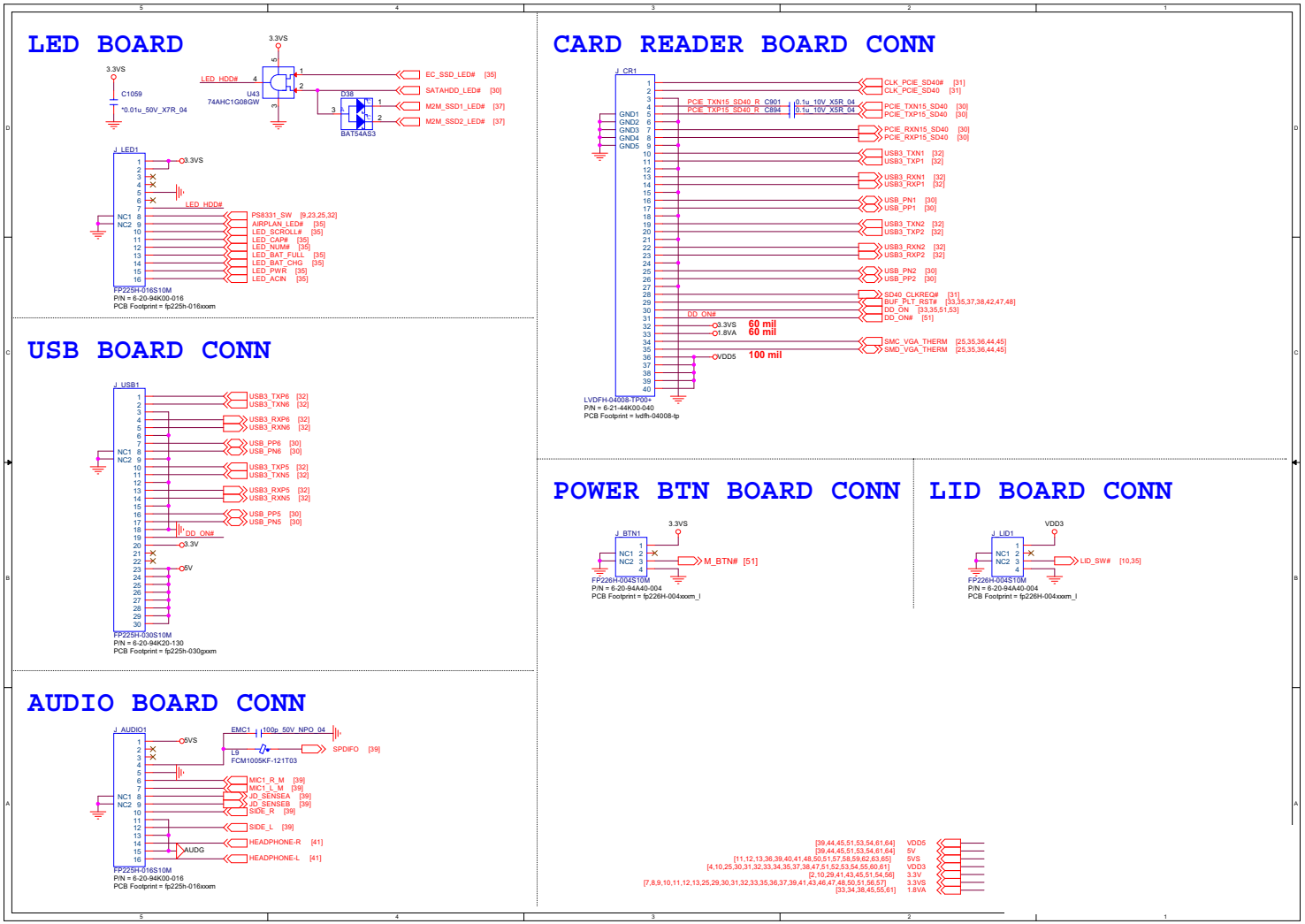

Conn, Fan

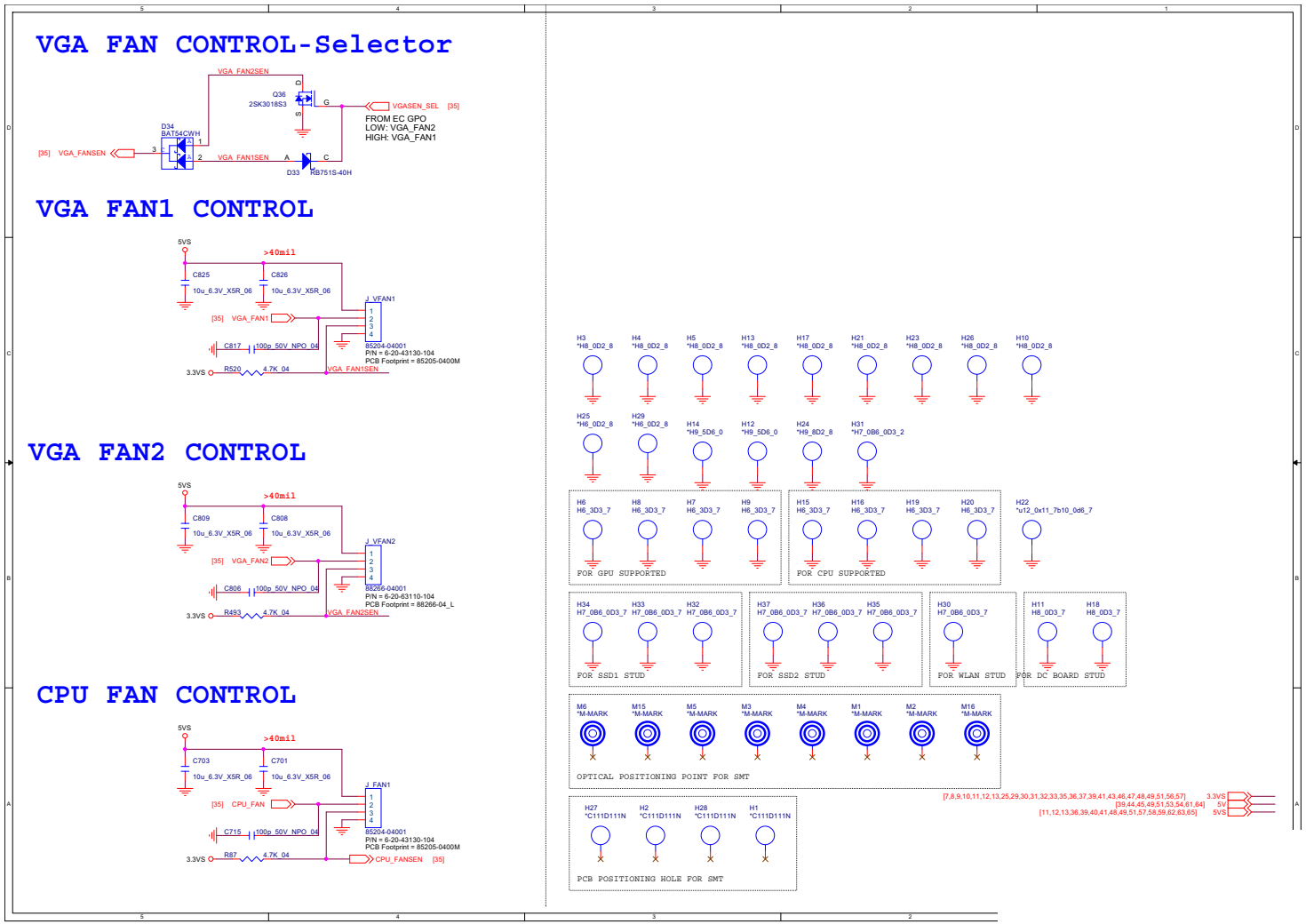

Sheet 50 of 77
Conn, Fan

5VS, 3.3V, 3.3VA, 3.3VS

Sheet 51 of 77
5VS, 3.3V, 3.3VA, 3.3VS

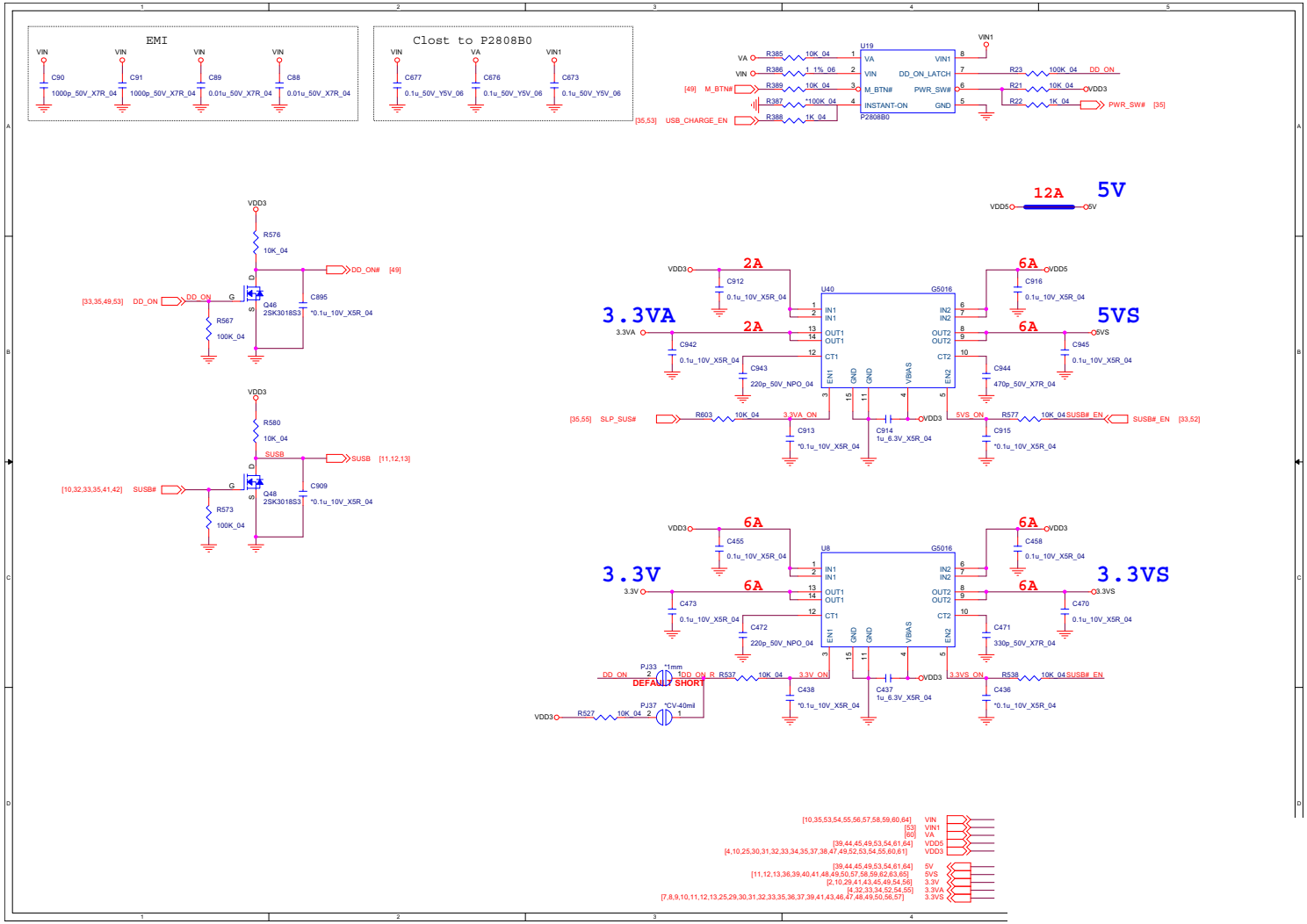

VCCST, VCCSTG, VCCSFR, NV3V3

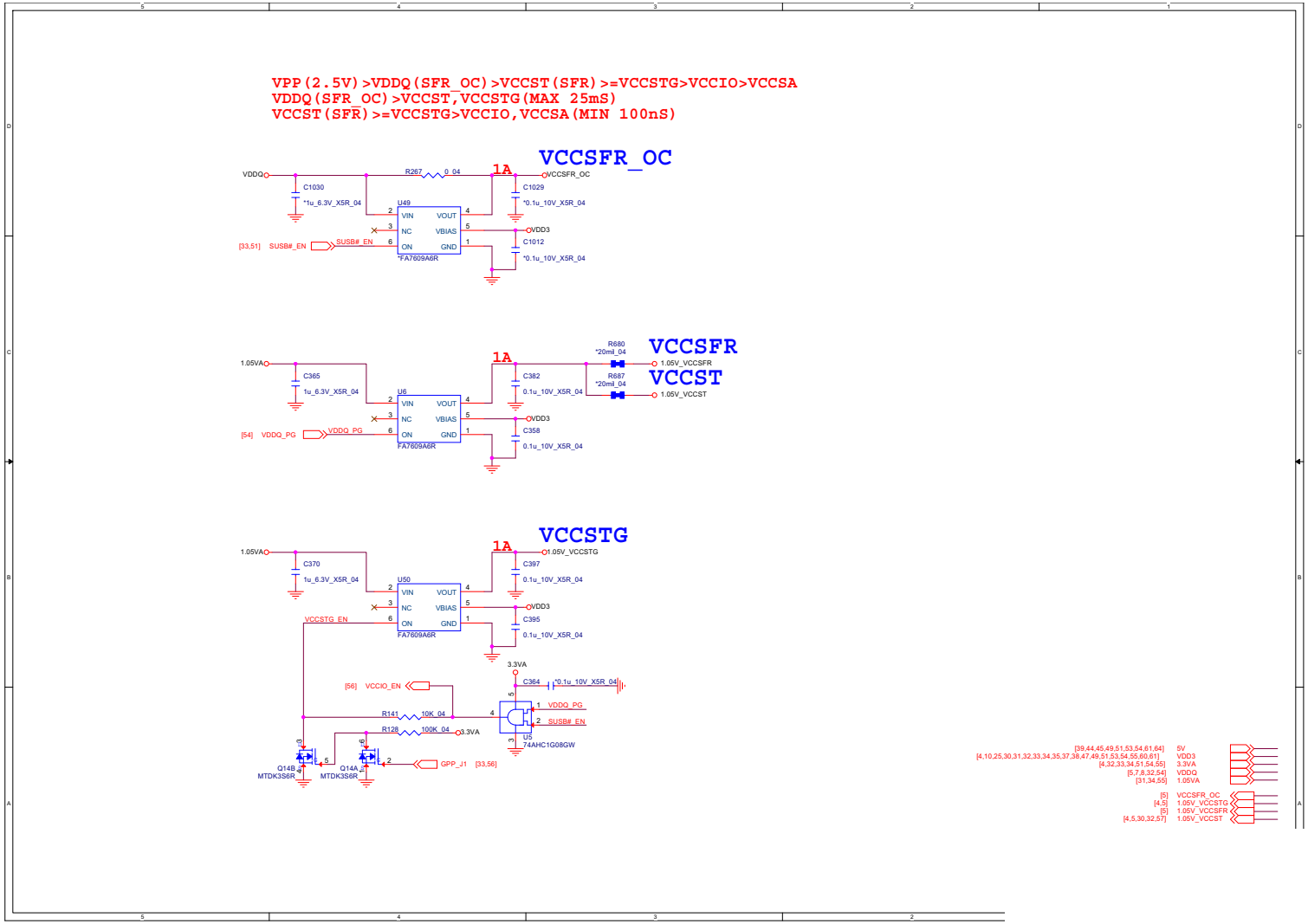

Sheet 52 of 77
VCCST,
VCCVSTG,VCCSF,
NV3V3

VDD3, VDD5

Sheet 53 of 77
VDD3, VDD5

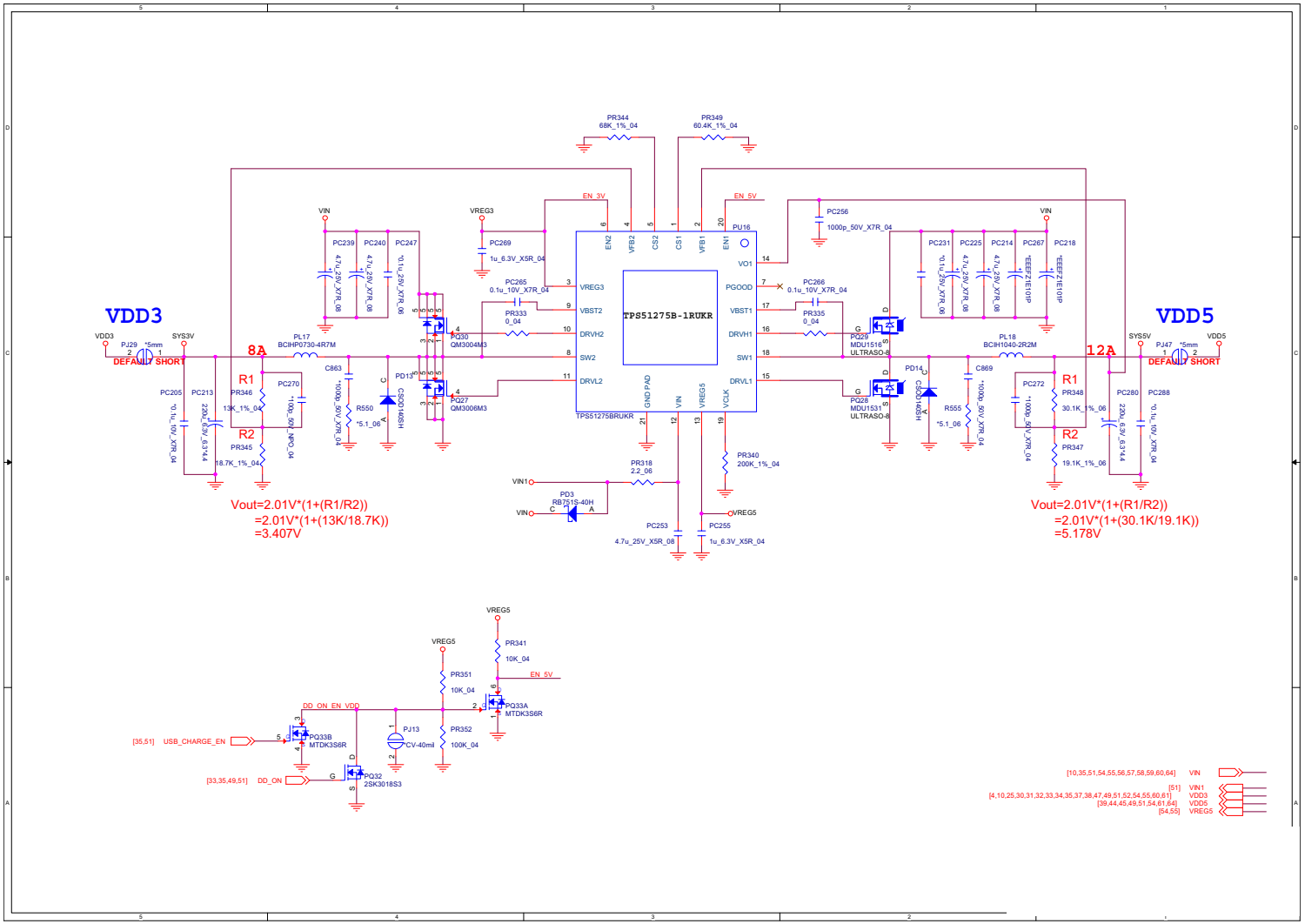

DDR 1.2V, 0.6VS, 2.5V

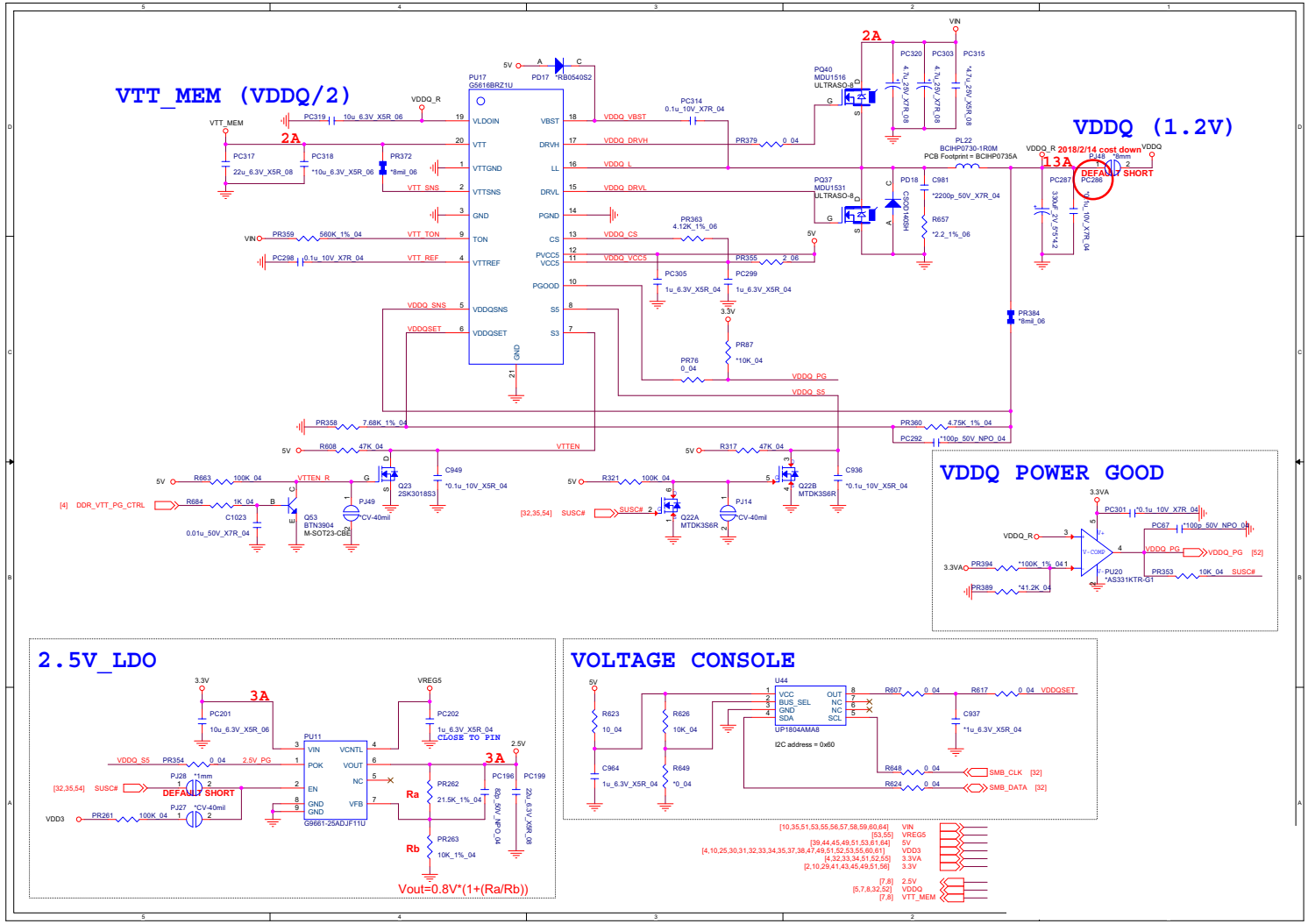

Sheet 54 of 77
DDR 1.2V, 0.6VS, 2.5V

1.8VA, 1.05VA

Sheet 55 of 77
1.8VA, 1.05VA

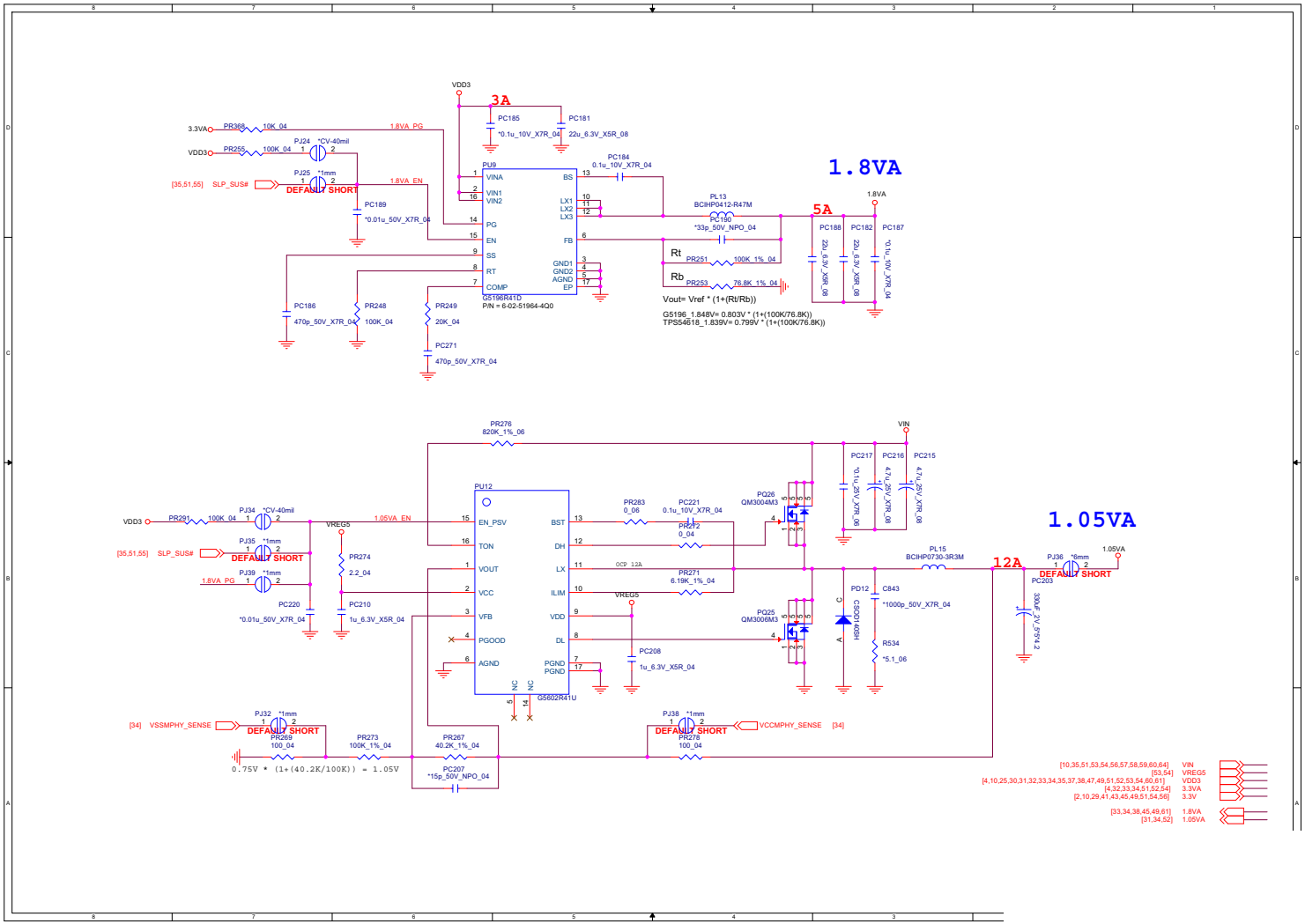

Power VCCIO

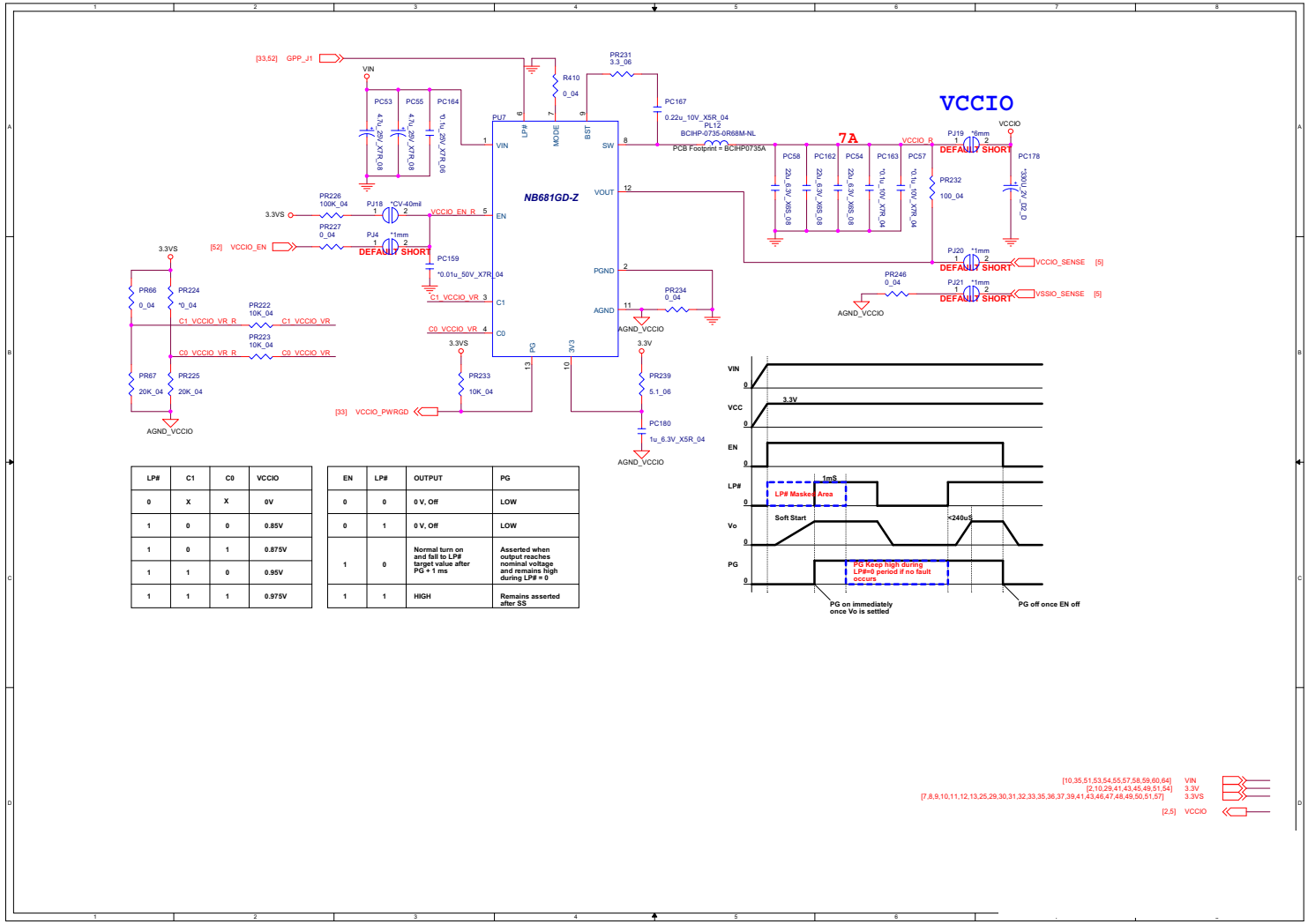

LP#	C1	C0	VCCIO
0	X	X	0V
1	0	0	0.85V
1	0	1	0.875V
1	1	0	0.95V
1	1	1	0.975V

EN	LP#	OUTPUT	PG
0	0	0 V, Off	LOW
0	1	0 V, Off	LOW
1	0	Normal turn on and fall to LP# target value after PG + 1 ms	Asserted when output reaches nominal voltage and remains high during LP# = 0
1	1	HIGH	Remains asserted after SS

Sheet 56 of 77
Power VCCIO

VCore, VCCGT, VCCSA 1/3

Sheet 57 of 77
VCore, VCCGT, VCCSA 1/3

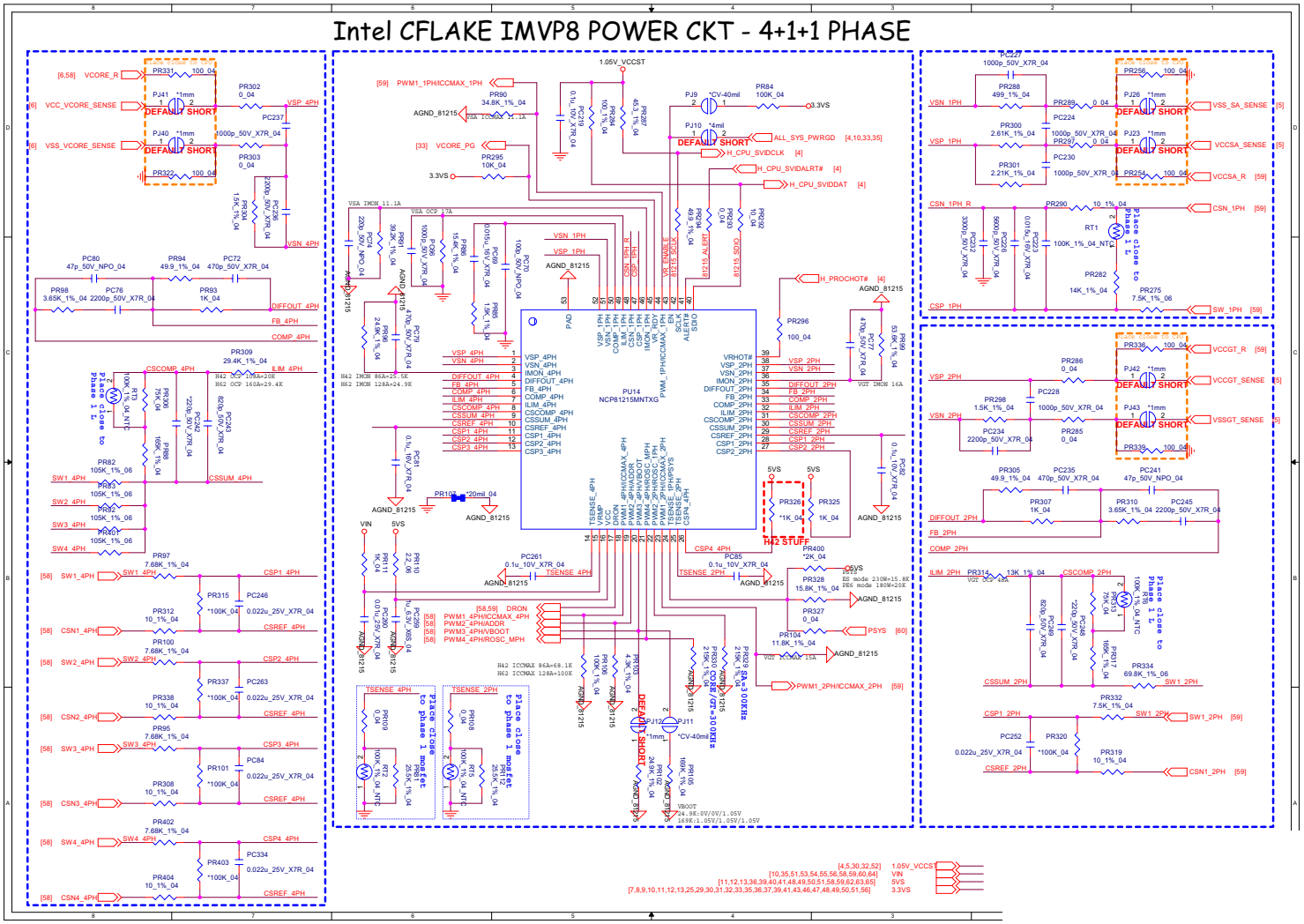

VCore, VCCGT, VCCSA 2/3

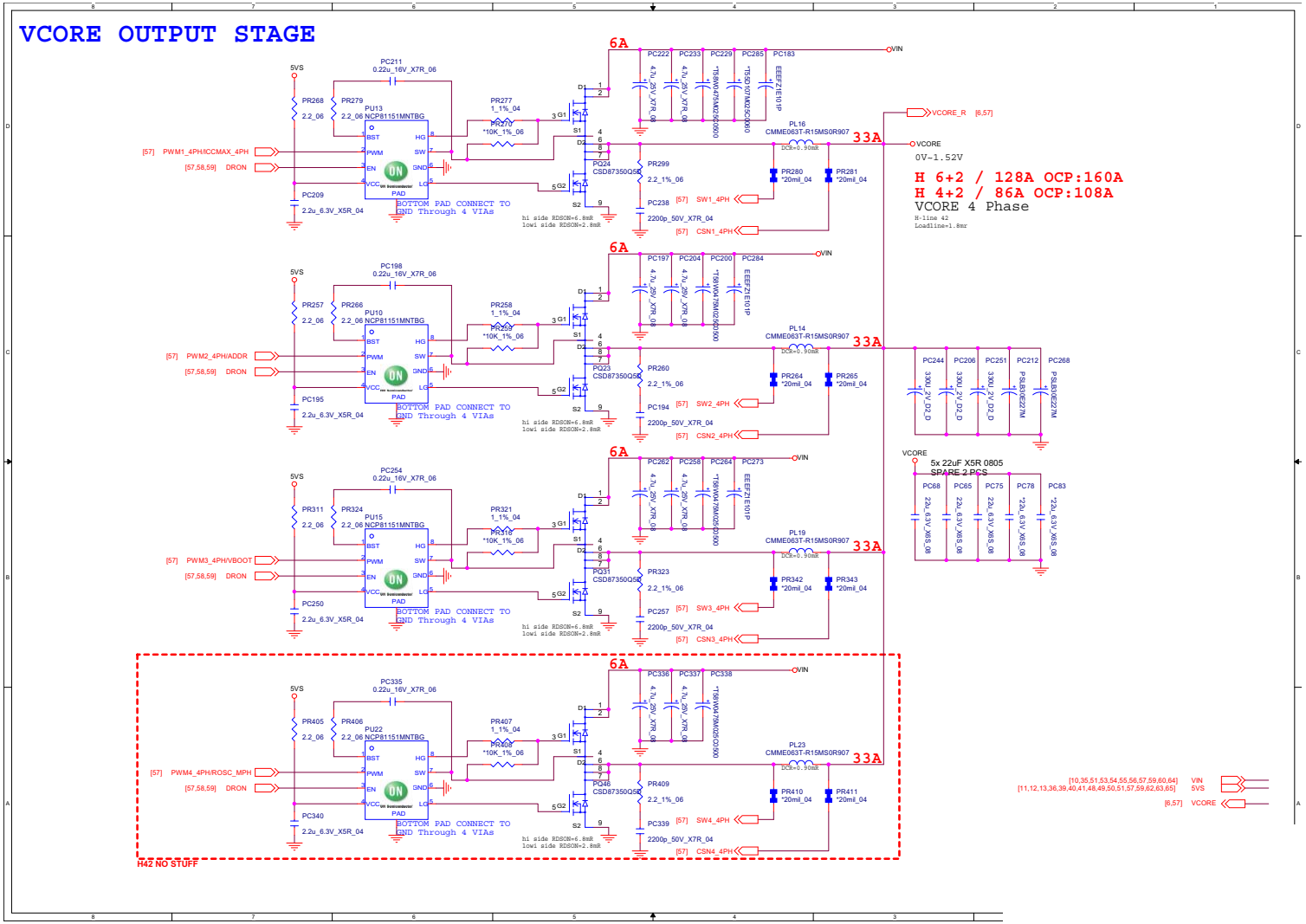

Sheet 58 of 77
VCore, VCCGT, VCCSA 2/3

VCore, VCCGT, VCCSA 3/3

Sheet 59 of 77
VCore, VCCGT, VCCSA 3/3

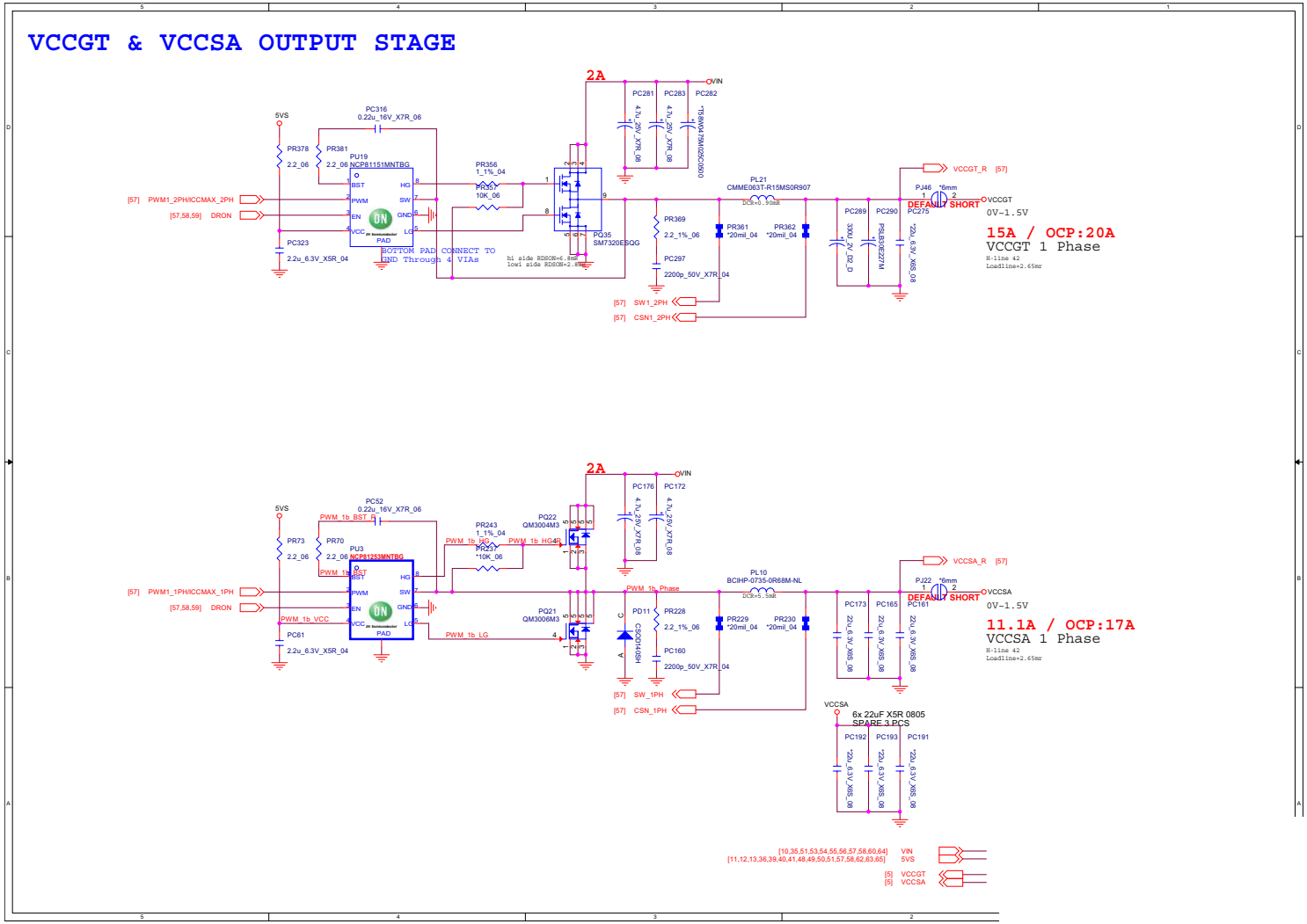

AC_In, Charger

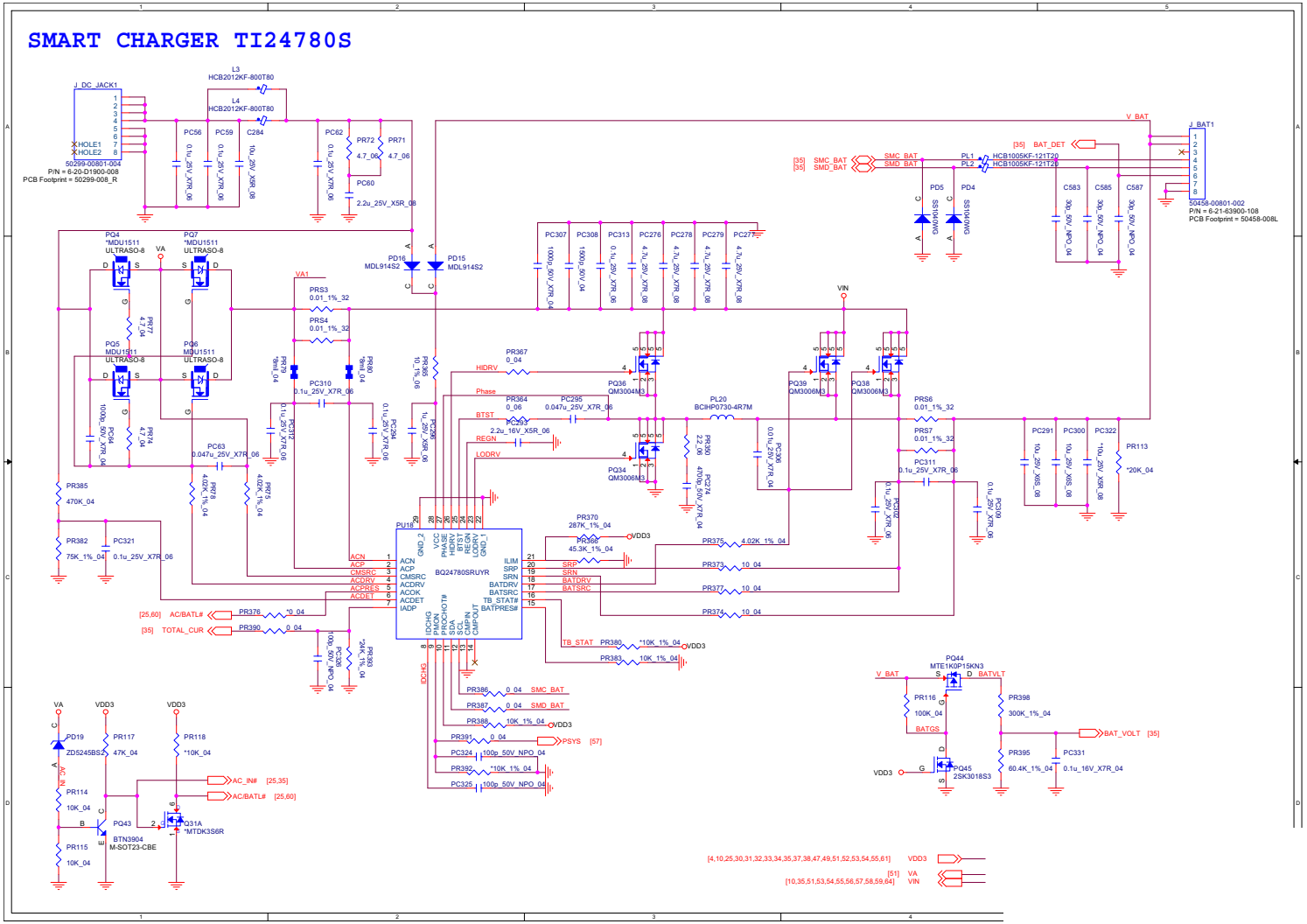

Sheet 60 of 77
AC_In, Charger

1V8_AON/RUN, PEX_VDD

Sheet 61 of 77
1V8_AON/RUN, PEX_VDD

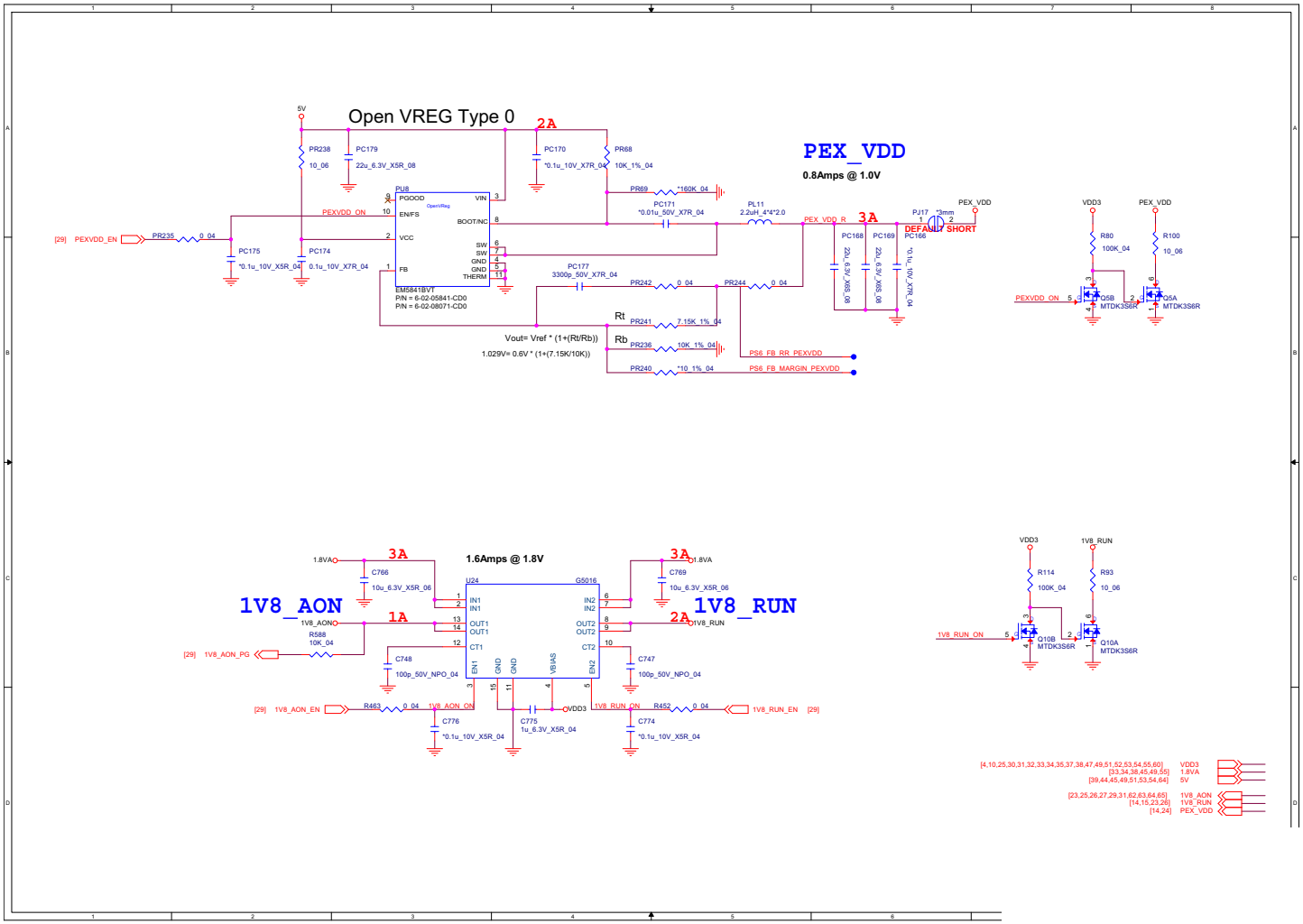

NVVDDS

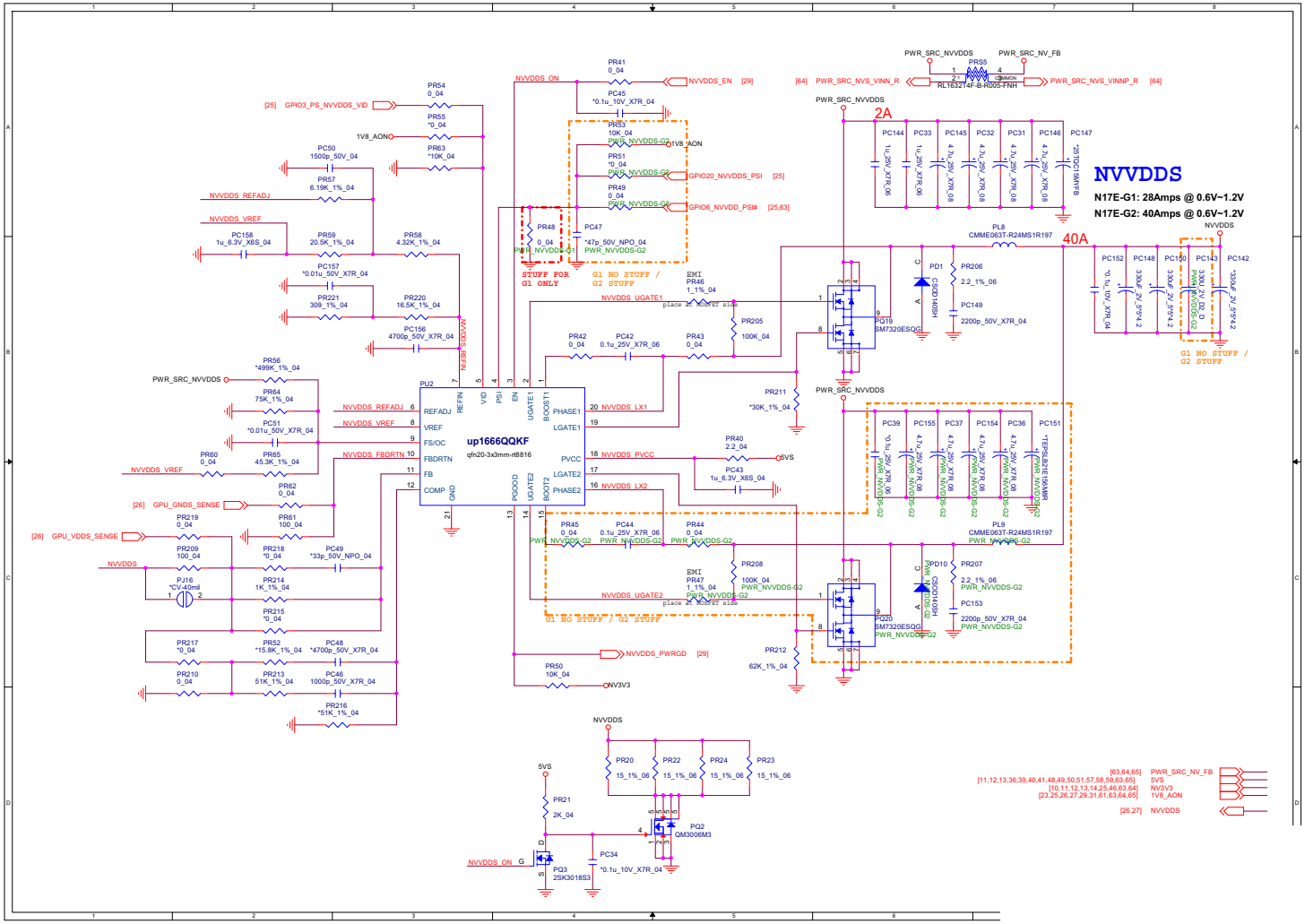

Sheet 62 of 77
NVVDDS

NVVDD Phase 1 & 2

Sheet 63 of 77
NVVDD Phase 1 & 2

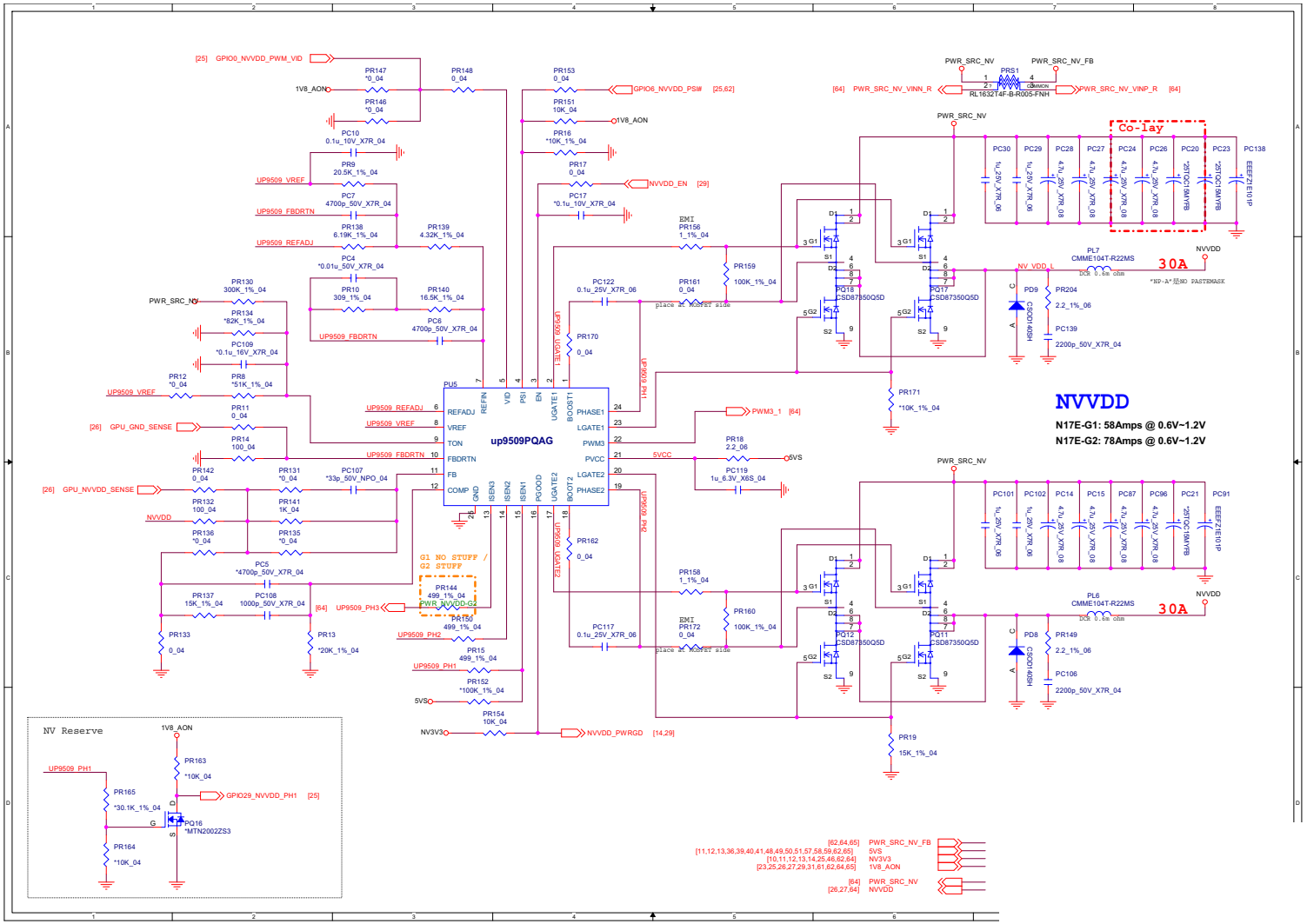

NVVDD Phase 3

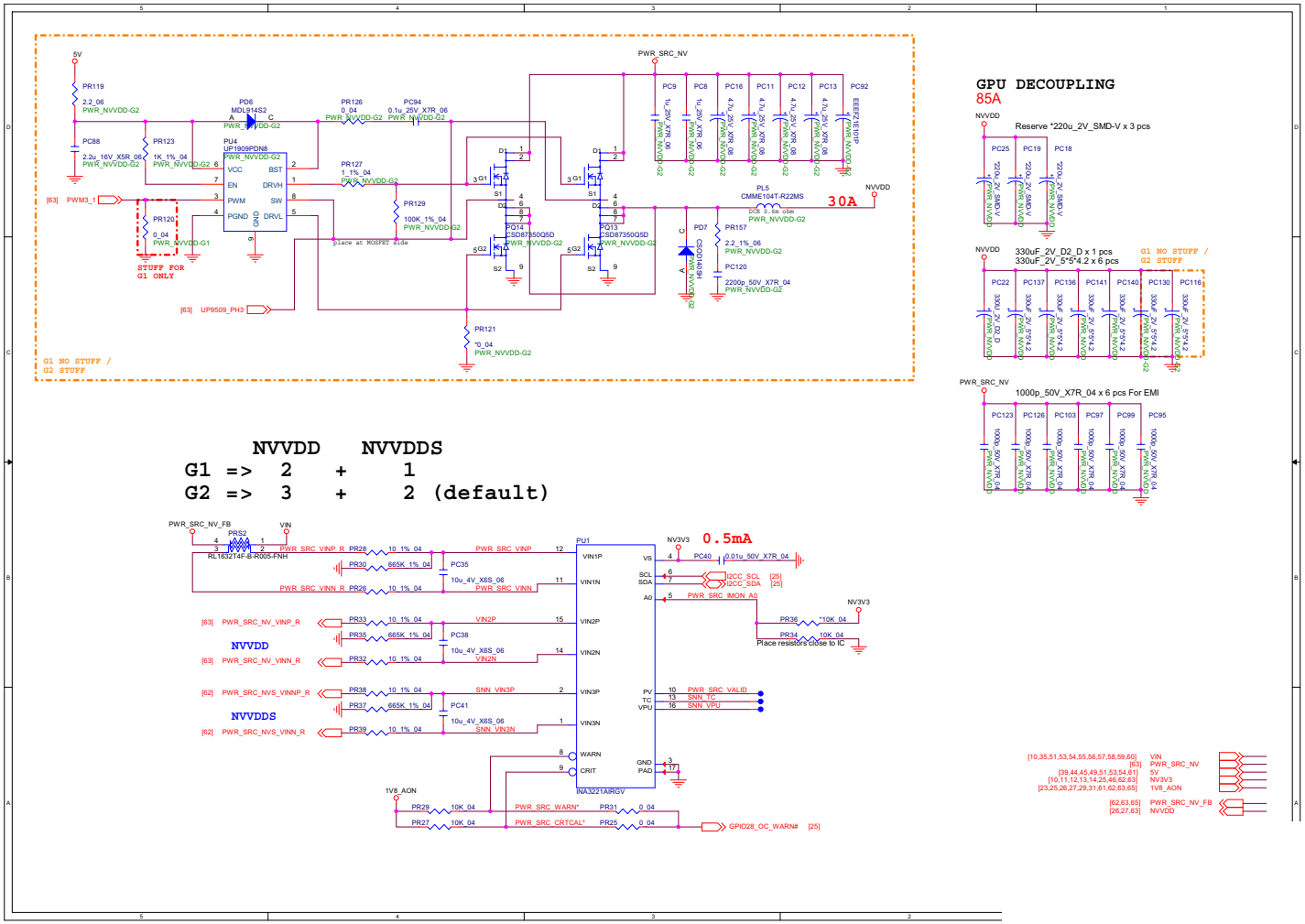

Sheet 64 of 77
NVVDD Phase 3

FBVDDQ

Sheet 65 of 77
FBVDDQ

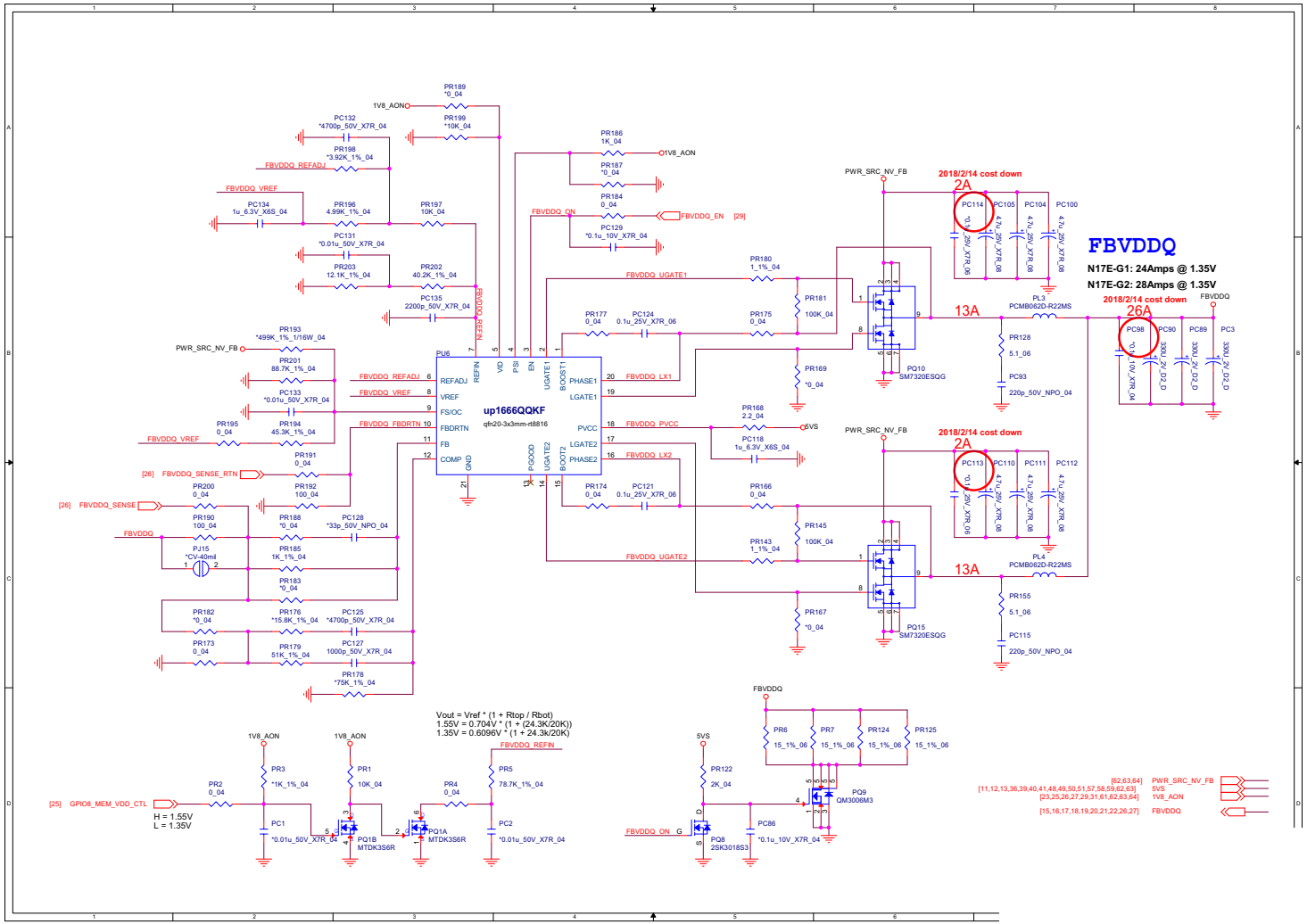

LED Board

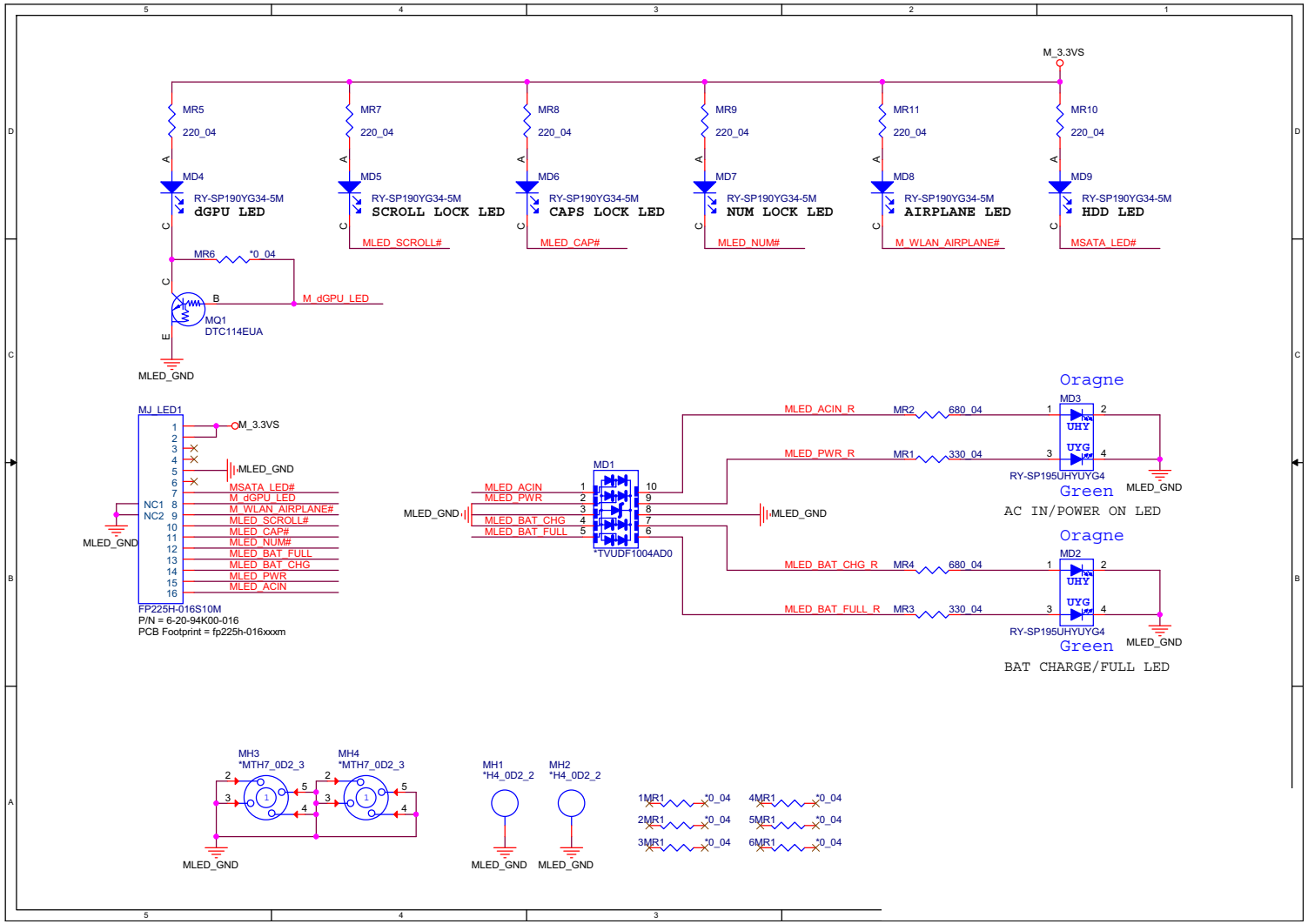

Sheet 66 of 77
LED Board

LID Board

Sheet 67 of 77
LID Board

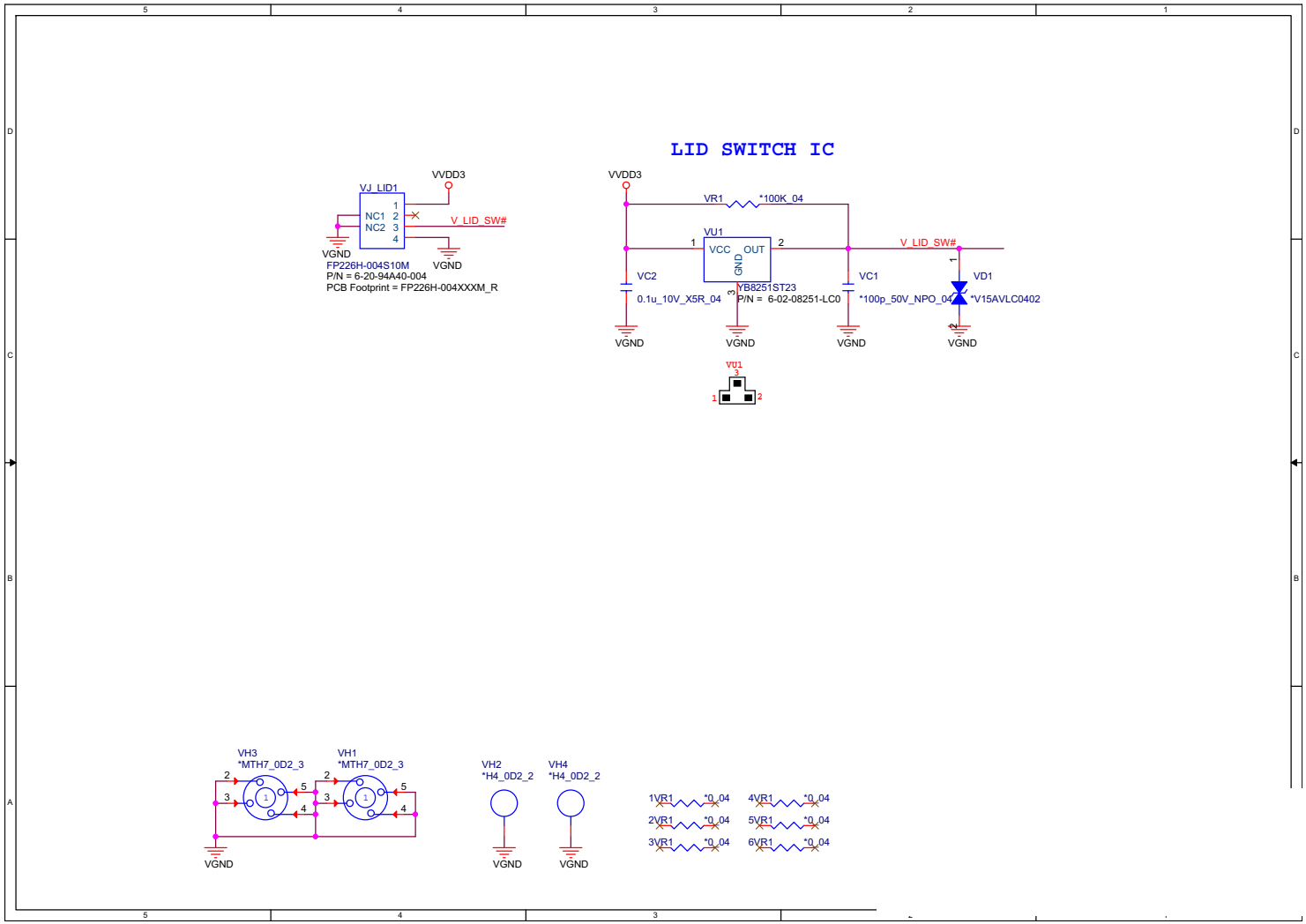

DC Board

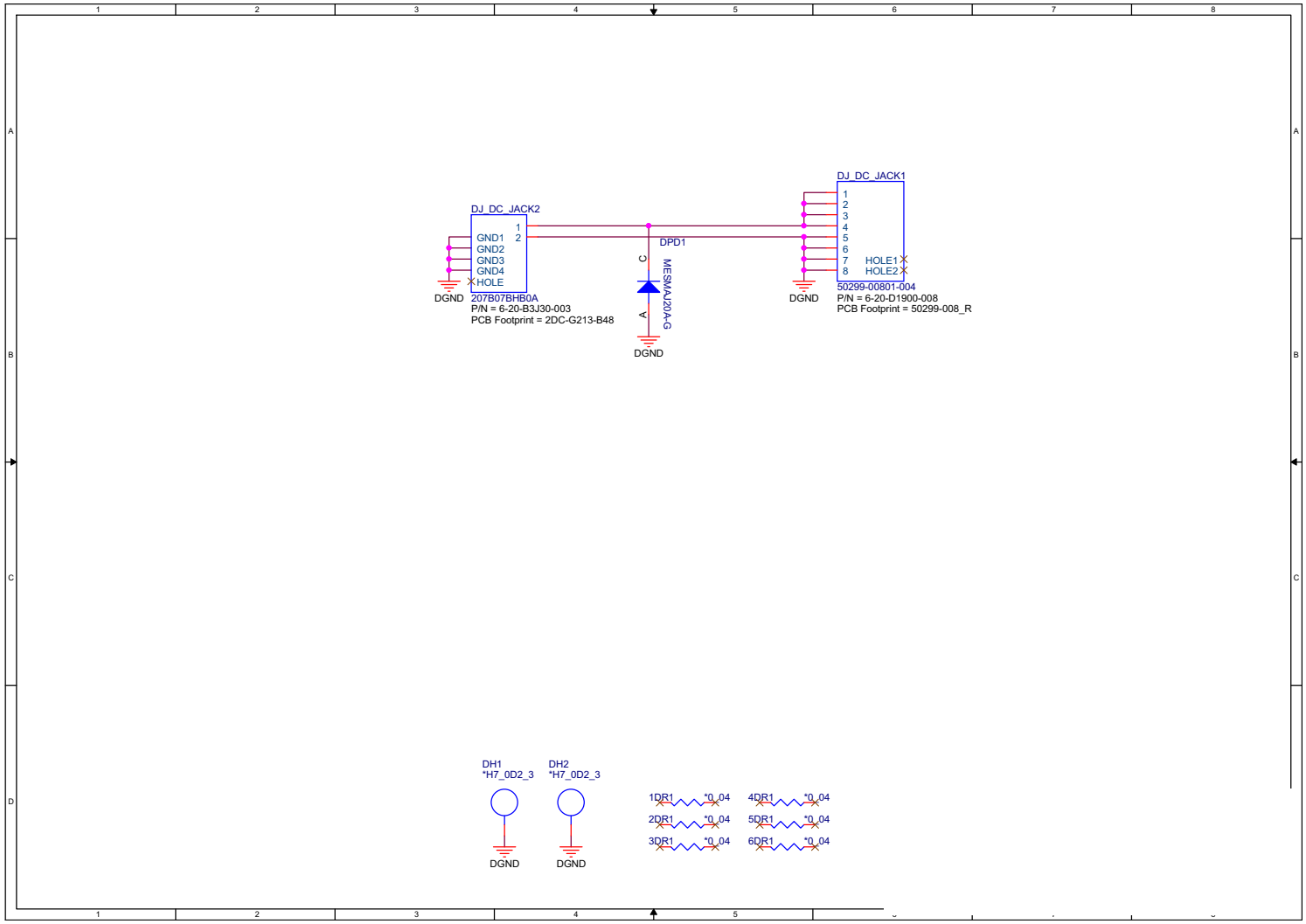

Sheet 68 of 77
DC Board

Power Board

Sheet 69 of 77
Power Board

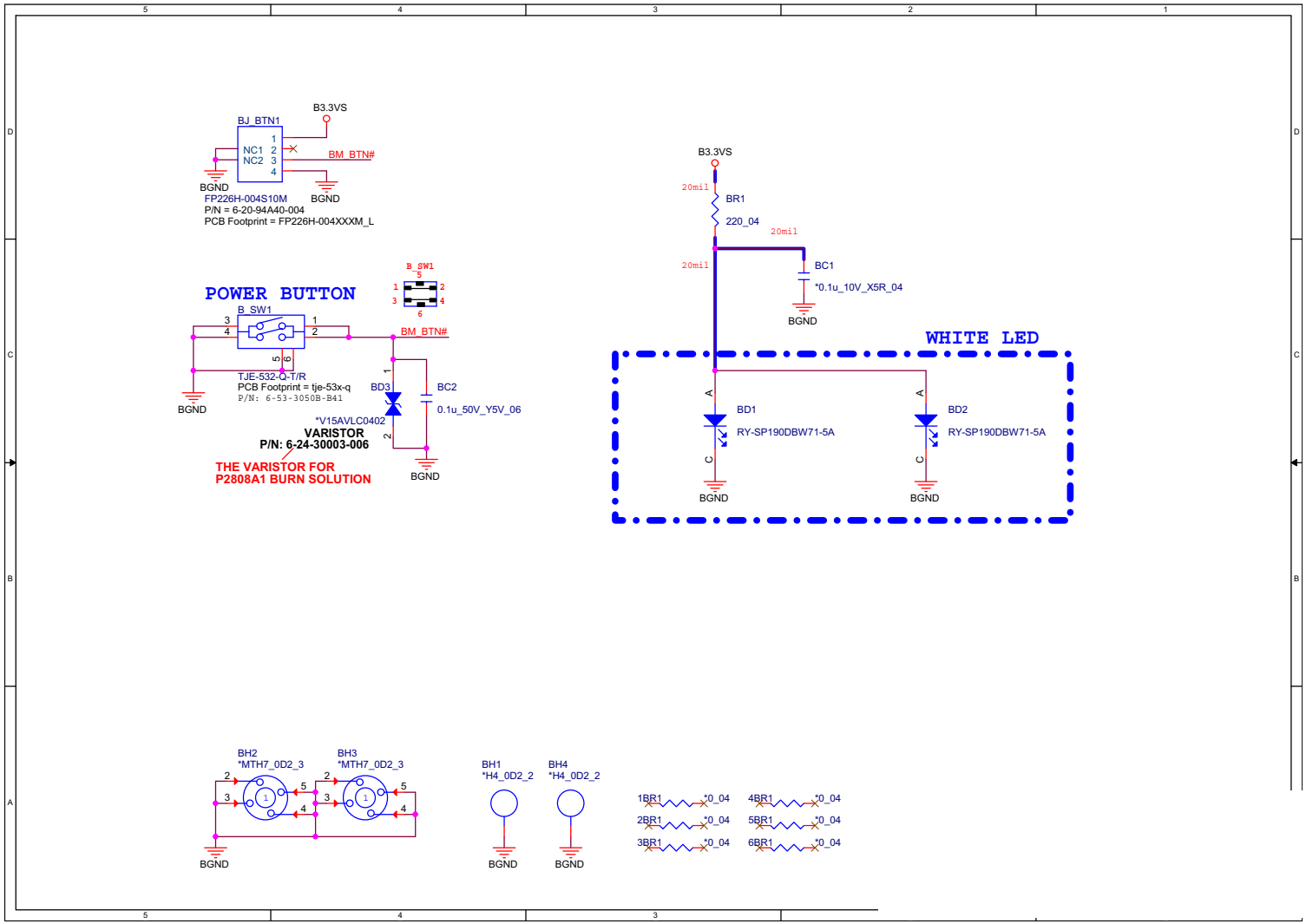

Click Board

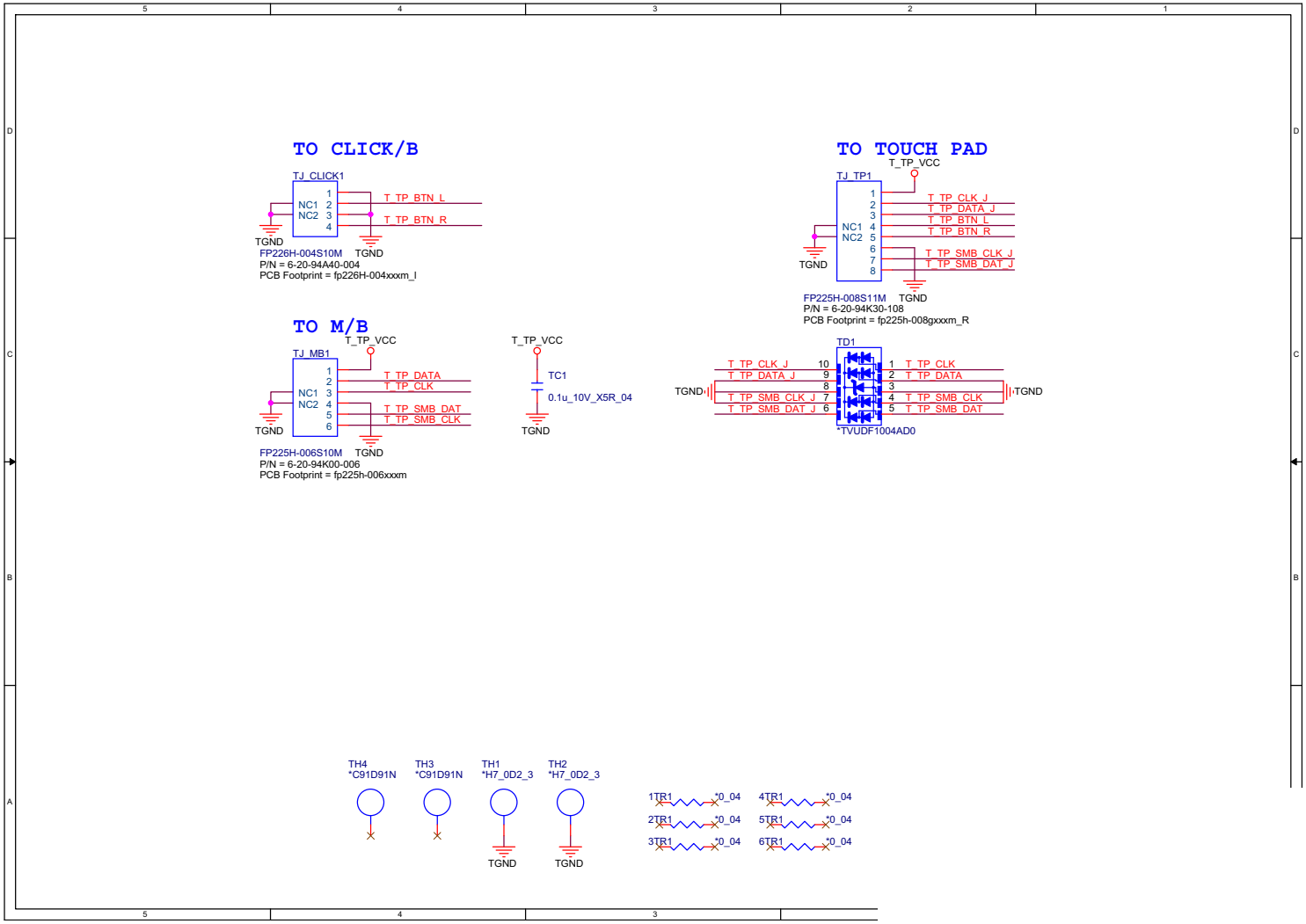

Sheet 70 of 77
Click Board

B.Schematic Diagrams

Audio Board

Sheet 71 of 77
Audio Board

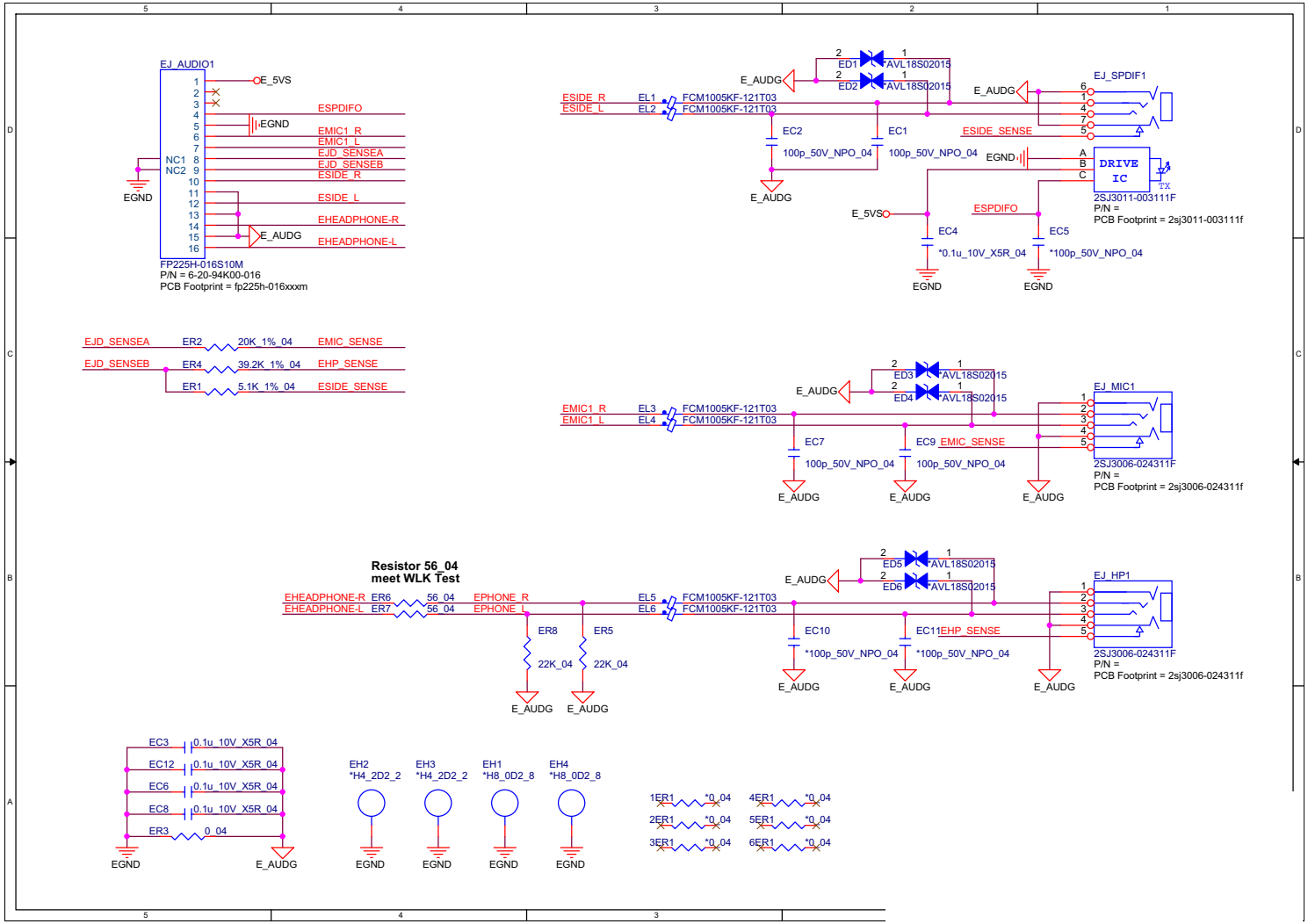

LAN Board

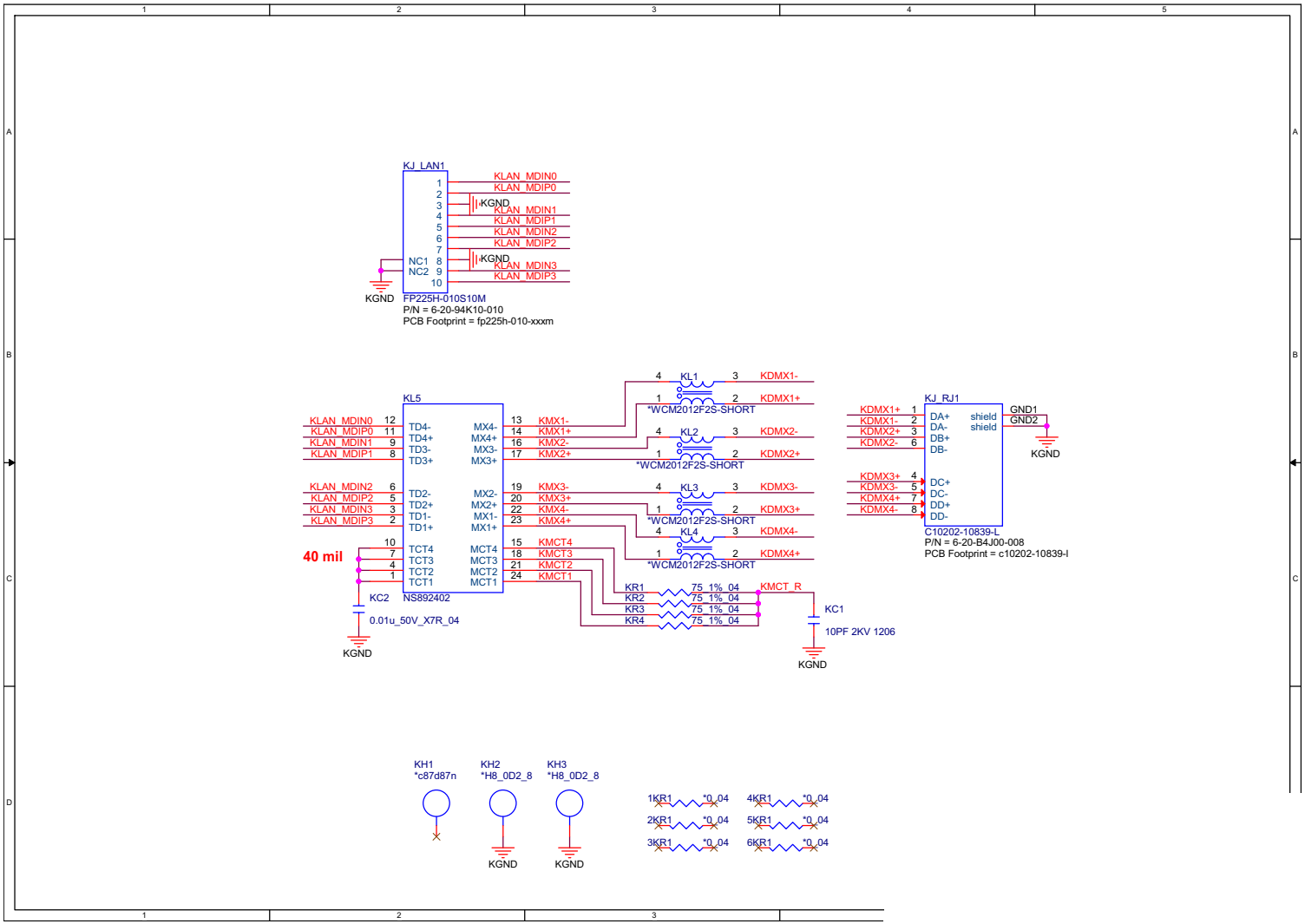

Sheet 72 of 77
LAN Board

USB Board

Sheet 73 of 77
USB Board

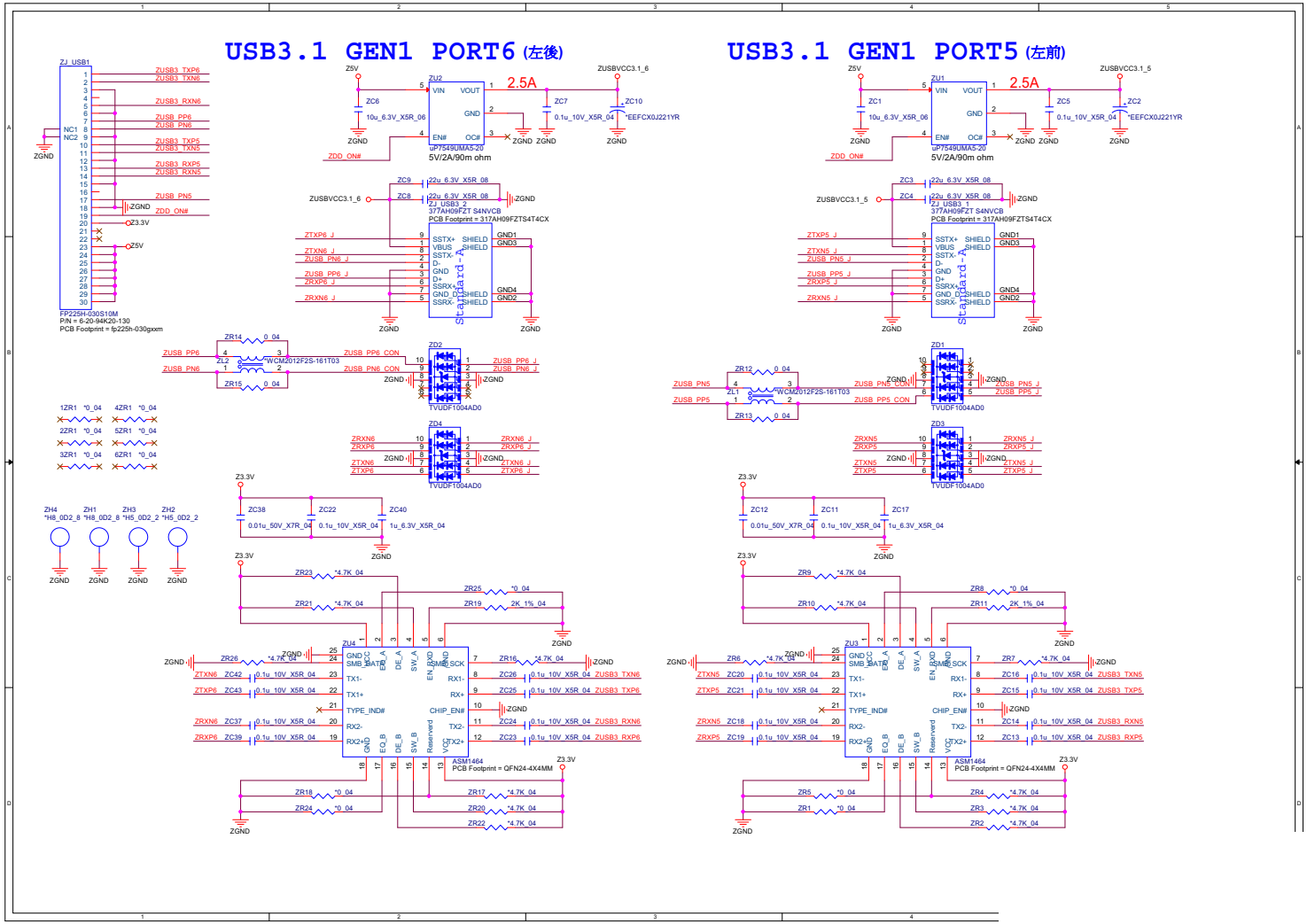

USB Board

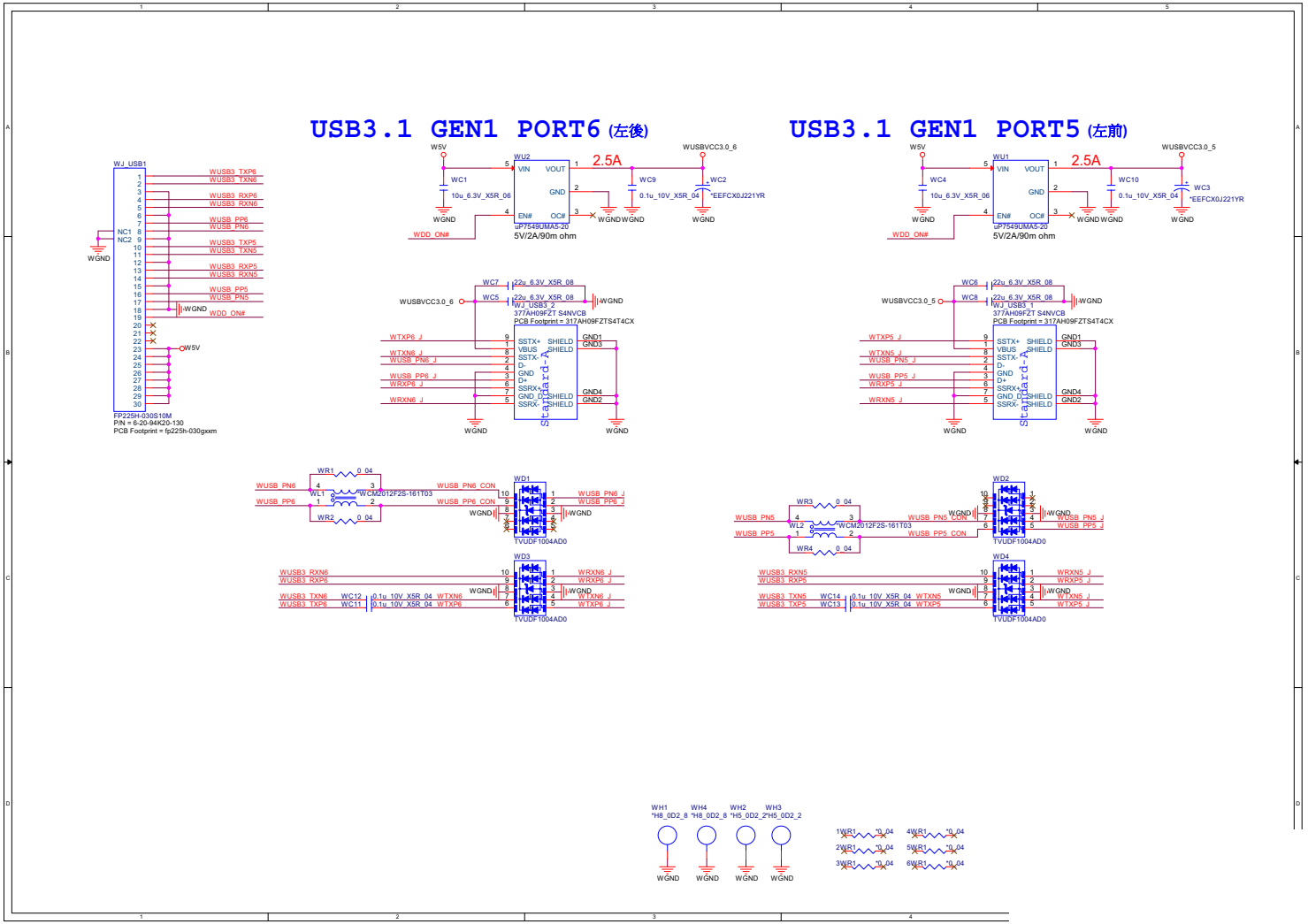

Sheet 74 of 77
USB Board

Card Reader

Sheet 75 of 77
Card Reader

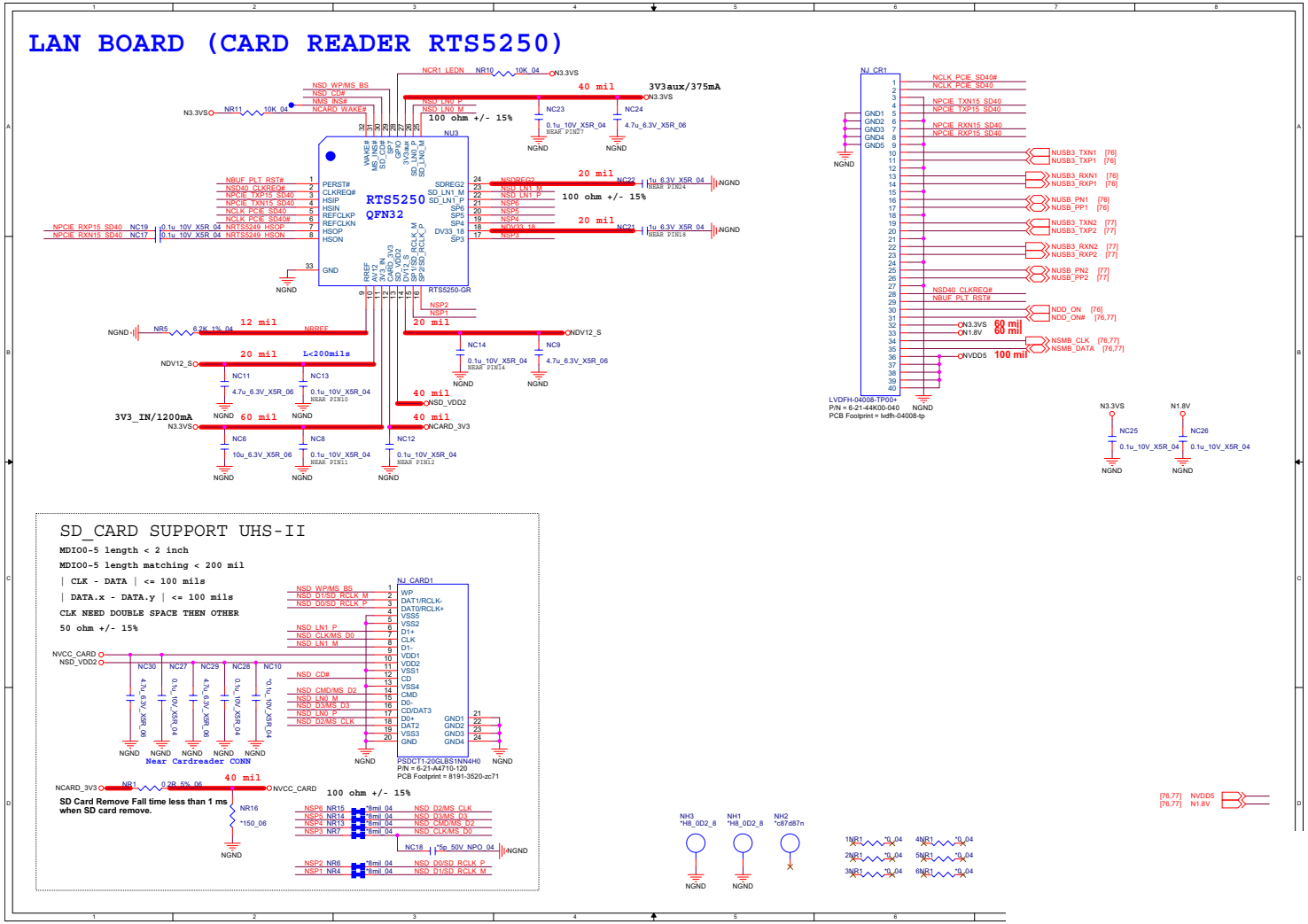

USB Port

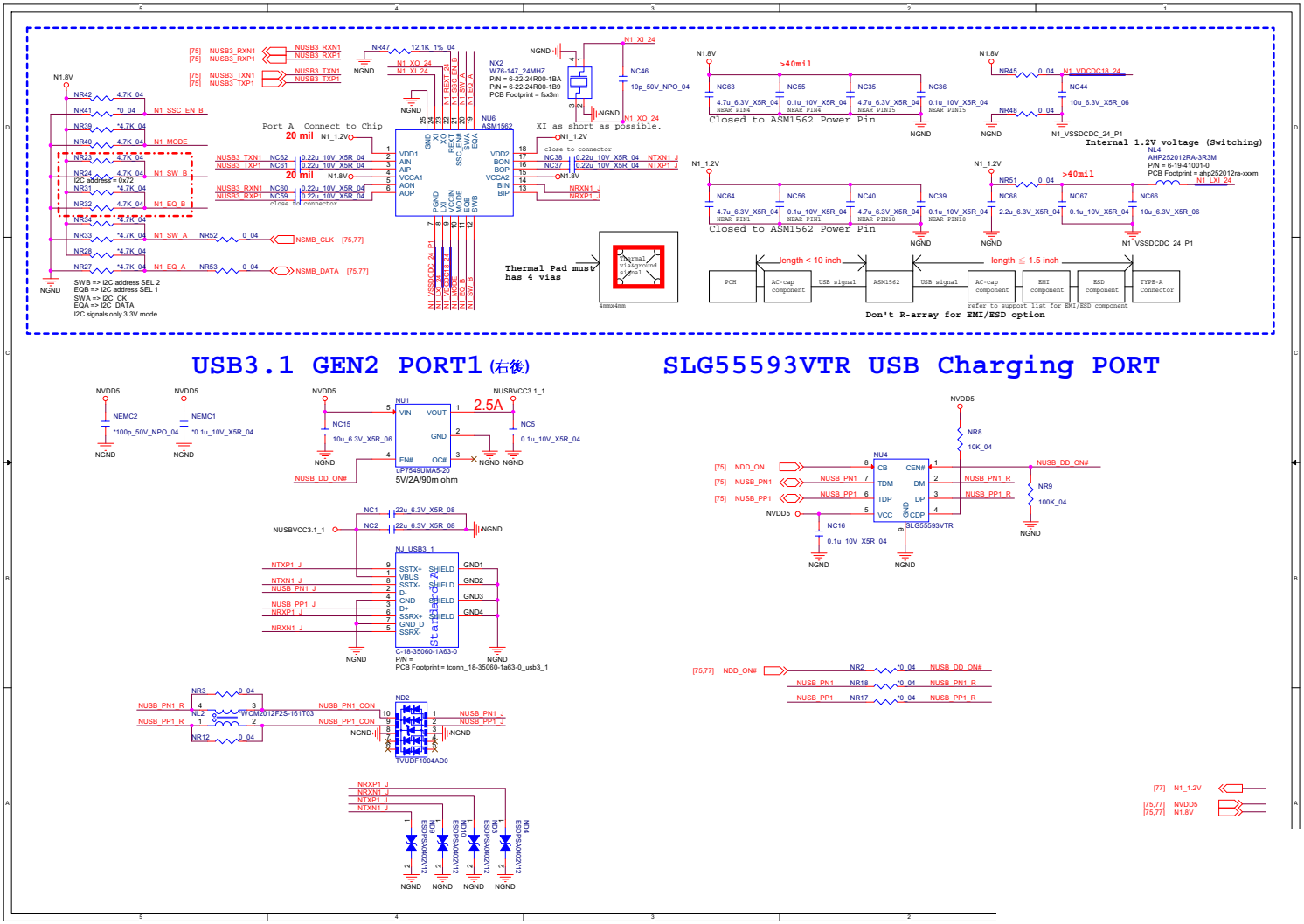

Sheet 76 of 77
USB Port

USB Port

Sheet 77 of 77
USB Port

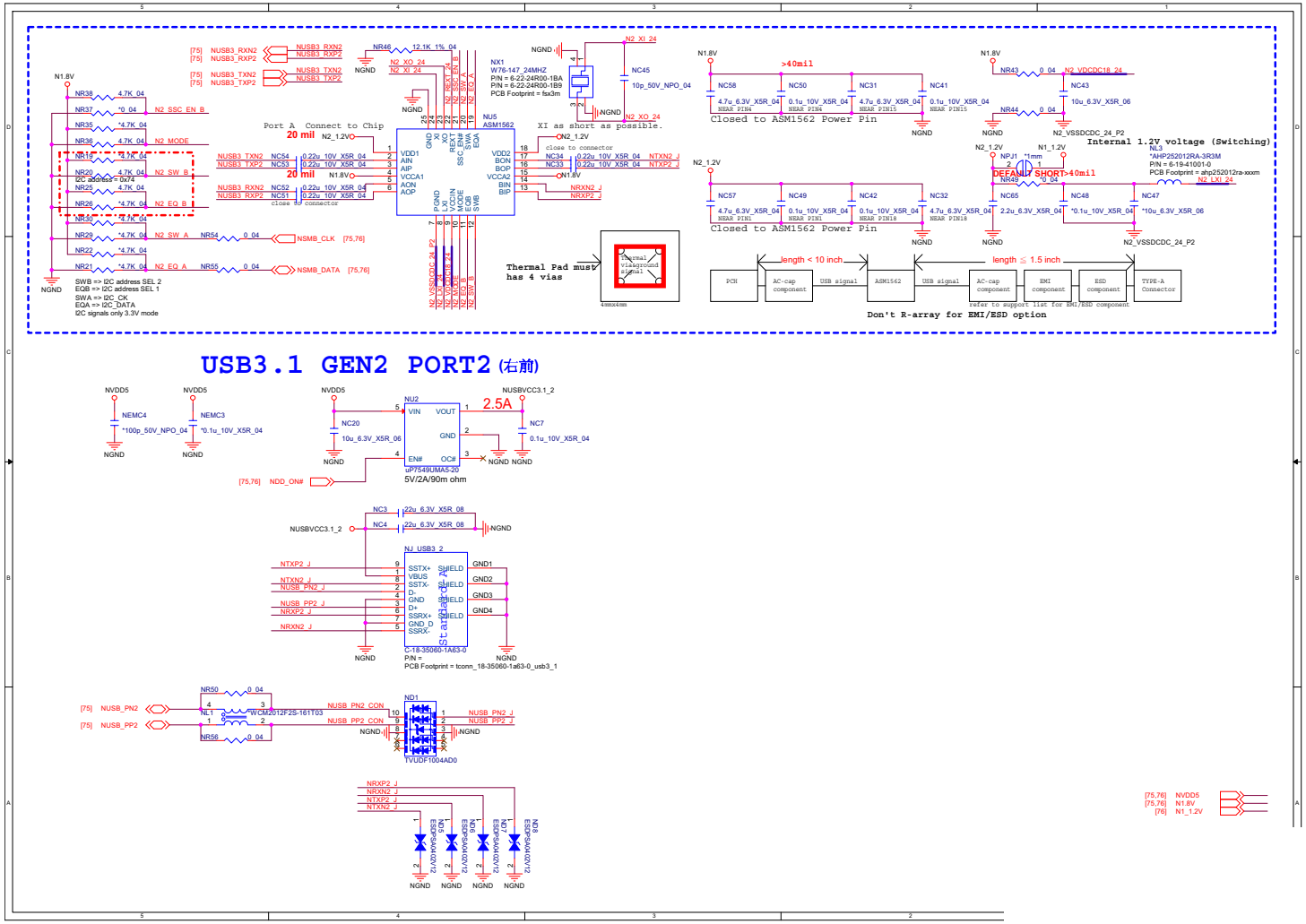

Appendix C:pdating the FLASH ROM BIOS

To update the FLASH ROM BIOS, you must:

- Download the BIOS update from the web site.
- Unzip the files onto a bootable CD/DVD/USB Flash Drive.
- Reboot your computer from an external CD/DVD/USB Flash Drive.
- Use the flash tools to update the flash BIOS using the commands indicated below.
- Restart the computer booting from the HDD and press **F2** at startup enter the BIOS.
- Load setup defaults from the BIOS and save the default settings and exit the BIOS to restart the computer.
- After rebooting the computer you may restart the computer again and make any required changes to the default BIOS settings.

Download the BIOS

1. Go to **www.clevo.com.tw** and point to **E-Services** and click **E-Channel**.
2. Use your user ID and password to access the appropriate download area (BIOS), and download the latest BIOS files (the BIOS file will be contained in a batch file that may be run directly once unzipped) for your computer model (**see sidebar for important information on BIOS versions**).

Unzip the downloaded files to a bootable CD/DVD or USB Flash drive

1. Insert a bootable CD/DVD/USB flash drive into the CD/DVD drive/USB port of the computer containing the downloaded files.
2. Use a tool such as Winzip or Winrar to unzip all the BIOS files and refresh tools to your bootable CD/DVD/USB flash drive (you may need to create a bootable CD/DVD with the files using a 3rd party software).

Set the computer to boot from the external drive

1. With the bootable CD/DVD/USB flash drive containing the BIOS files in your CD/DVD drive/USB port, restart the computer and press **F2** (in most cases) to enter the BIOS.
2. Use the arrow keys to highlight the **Boot** menu.
3. Use the "+" and "-" keys to move boot devices up and down the priority order.
4. Make sure that the CD/DVD drive/USB flash drive is set first in the boot priority of the BIOS.
5. Press **F4** to save any changes you have made and exit the BIOS to restart the computer.

BIOS Version

Make sure you download the latest correct version of the BIOS appropriate for the computer model you are working on.

You should only download BIOS versions that are V1.0X.XX or higher as appropriate for your computer model.

Note that BIOS versions are not backward compatible and therefore **you may not downgrade your BIOS to an older version** after upgrading to a later version (e.g if you upgrade a BIOS to ver 1.0X.05, you **MAY NOT** then go back and flash the BIOS to ver 1.0X.04).

Use the flash tools to update the BIOS

1. Make sure you are not loading any memory management programs such as HIMEM by holding the **F8** key as you see the message "**EFI Shell**". You will then be prompted to give "**Y**" or "**N**" responses to the programs being loaded by EFI Shell. Choose "N" for any memory management programs.
2. You should now see DISK **fsX**:\> (X is the designated drive number for the CD/DVD drive/USB flash drive).
3. **Type the following command**:

   fsX:\> Flash.nsh

4. The utility will then proceed to flash the BIOS.
5. You should then be prompted to press any key to restart the system or turn the power off, and then on again but make sure you remove the CD/DVD/USB flash drive from the CD/DVD drive/USB port before the computer restarts.

Restart the computer (booting from the HDD)

1. With the CD/DVD/USB flash drive removed from the CD/DVD drive/USB port the computer should restart from the HDD.
2. Press **F2** as the computer restarts to enter the BIOS.
3. Use the arrow keys to highlight the **Exit** menu.
4. Select **Load Setup Defaults** (or press **F3**) and select "**Yes**" to confirm the selection.
5. Press **F4** to save any changes you have made and exit the BIOS to restart the computer.

Your computer is now running normally with the updated BIOS

You may now enter the BIOS and make any changes you require to the default settings.